2023
Shop Manual

Summit™ Series

Freeride Series

ski-doo®

Printed in Canada

Technical Publications
Bombardier Recreational Products Inc.
Valcourt QC Canada

TABLE OF CONTENTS

TABLE OF CONTENTS

TABLE OF CONTENTS

06 DRIVE SYSTEM AND BRAKE (cont'd)

TABLE OF CONTENTS

TABLE OF CONTENTS

SAFETY NOTICE

This manual has been prepared as a guide to servicing and repair the Ski-Doo® snowmobile from the REV™ Gen4 platform.

This edition was primarily published to be used by mechanical technicians who are already familiar with all service procedures relating to BRP products. Mechanical technicians should attend training courses given by BRPTI.

Please note that the instructions in this manual will apply only if proper hand tools and special service tools are used.

The contents of this manual depicts parts and/or procedures applicable to a particular product at the time of writing. Service and warranty bulletins may be published to update the content of this manual. Dealer modifications that were carried out after manufacturing of the product, whether or not authorized by BRP, are not included.

In addition, the sole purpose of the illustrations throughout the manual, is to assist identification of the general configuration of the parts. They are not to be interpreted as technical drawings or exact replicas of the parts.

The use of BRP parts is most strongly recommended when considering replacement of any component. Dealer and/or distributor assistance should be sought in case of doubt.

The engines and the corresponding components identified in this document should not be utilized on product(s) other than those mentioned in this document.

It is understood that certain modifications may render use of the vehicle illegal under existing federal, provincial and state regulations.

This manual emphasizes particular information which, is denoted by the following wording and symbols:

⚠ WARNING

Indicates a potential hazard that, if not avoided, could result in serious injury or death.

⚠ CAUTION **Indicates a hazardous situation which, if not avoided, could result in minor or moderate injury.**

NOTICE **Indicates an instruction which, if not followed, could result in severe damage to vehicle components or other property.**

NOTE: Indicates supplementary information required to fully complete an instruction.

Although the mere reading of such information does not eliminate the hazard, your understanding of the information provided will promote its correct use.

Always observe common shop safety practice.

Unless otherwise noted, the engine must be stopped and the tether cord must be removed prior to perform any services.

Torque wrench tightening specifications must be strictly adhered to. Use the torque values and service products as in the exploded views or in the procedures when noted.

Locking devices when removed must be replaced (e.g.: locking tabs, elastic stop nuts, self-locking fasteners, cotter pins, etc.).

Hoses, cables and locking ties removed during a procedure must be reinstalled as per factory standards.

When ordering parts always refer to the specific model *PARTS CATALOGS*.

We strongly recommend that any services be carried out and/or verified by a highly skilled professional mechanic.

It is understood that this manual may be translated into another language. In the event of any discrepancy, the English version shall prevail.

BRP disclaims liability for all damages and/or injuries resulting from the improper use of the contents of this publication.

IMPORTANT SAFETY PRECAUTIONS

We do not provide warnings about many basic shop safety practices (e.g.: Use Grinding Wheel – wear safety glasses). If you have not received shop safety training or do not feel confident about your knowledge of safe servicing practices, we recommend that you do not attempt to perform the procedures described in BRP shop manuals.

You should have a clear understanding of all basic shop safety practices. You should be wearing the appropriate clothing, using appropriate safety

equipment and taking all necessary safety precautions. Please be especially careful of the following:

- Read and understand all instructions before you begin a procedure or repair.
- Ensure you have the proper tools, any necessary replacement parts and the skills to perform the tasks safely and completely.
- Protect your eyes by using approved and properly fitted safety glasses.
- Use other protective wear when necessary, for example safety shoes and gloves.
- Unless the service procedure requires that the engine remain running, make sure the engine is off **before** beginning service.
- Be sure there is adequate ventilation whenever you run the engine, to avoid the risk of Carbon Monoxide poisoning.
- To avoid injury from moving parts, make sure your hands, fingers and clothing are out of the way when the engine is running.
- Gasoline vapors and hydrogen gases from batteries are explosive. Keep all cigarettes, sparks and flames away from the battery, fuel-related components and other enclosed compartments.
- Never use gasoline to clean parts, always use an approved nonflammable solvent.
- Never drain or store gasoline in an open container.

⚠ WARNING

The foregoing list represents general safety practices. For details on workplace health and safety requirements in your area, consult your local workplace health and safety agency or association.

We have provided you with some of the most important general service safety precautions, above. We cannot, however, warn you of every conceivable hazard that can arise in performing the service and repair procedures depicted in BRP manuals. Only you can decide whether or not you should perform a given task.

INTRODUCTION

The information and component/system descriptions contained in this manual are correct at time of writing. BRP however, maintains a policy of continuous improvement of its products without imposing upon itself any obligation to install them on products previously manufactured.

Due to late changes, there may be some differences between the manufactured product and the description and/or specifications in this document.

BRP reserves the right at any time to discontinue or change specifications, designs, features, models or equipment without incurring obligation.

VEHICLE INFORMATION

VEHICLE IDENTIFICATION NUMBER (VIN)

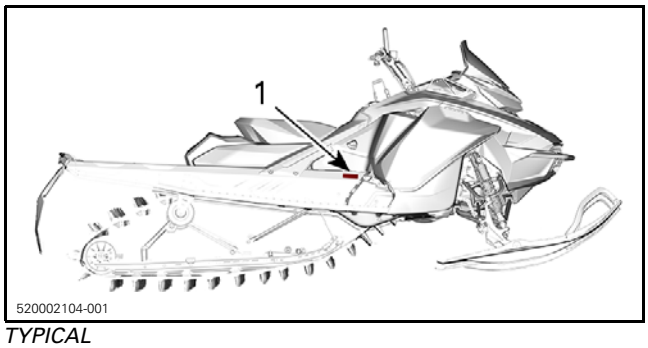

TYPICAL
1. Vehicle description decal

Identification Number Description

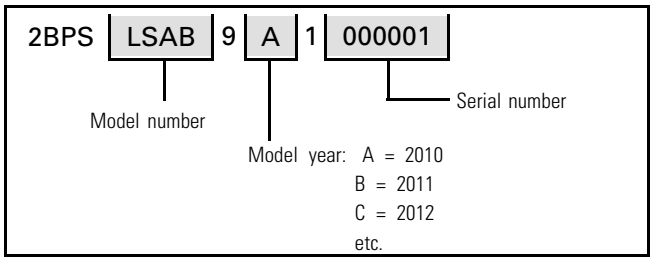

ENGINE IDENTIFICATION NUMBER (EIN)

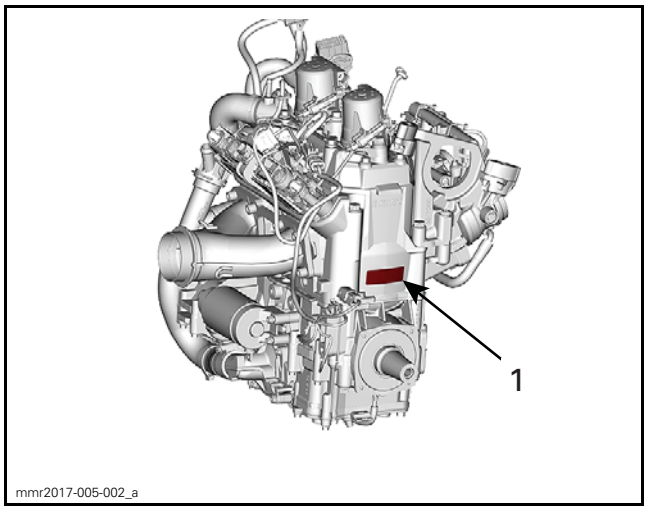

TYPICAL
1. Engine serial number

COMPLIANCE LABEL

Regulation (EU) 2016/1628 applicable for Non-Road Mobile Machineries

Vehicles who comply to Regulation (EU) 2016/1628 (NRMM) are identified on the engine.

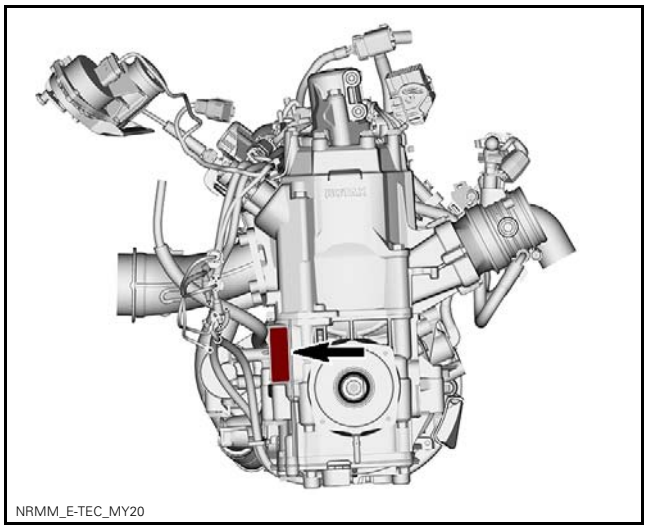

TYPICAL

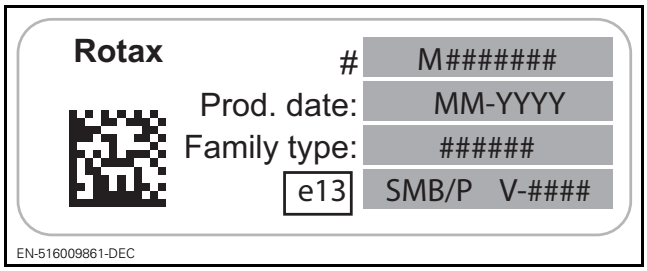

TYPICAL NRMM IDENTIFICATION

Depending on your particular vehicle configuration, an additional NRMM identification decal may be installed on the tunnel, near the chaincase.

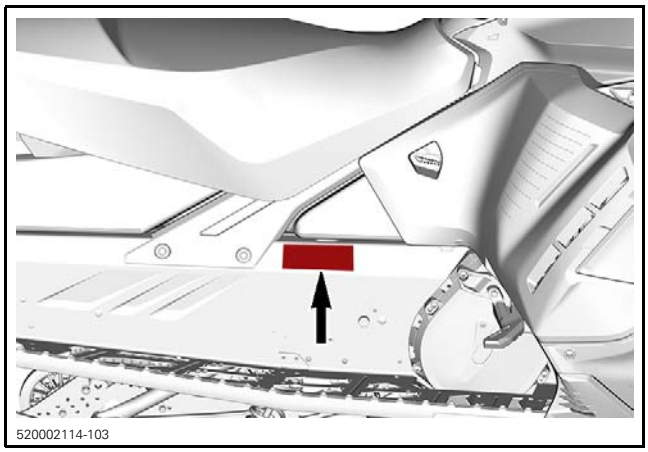

TYPICAL - ON RH SIDE OF TUNNEL

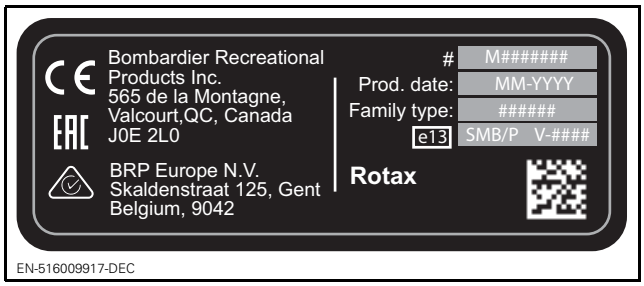

TYPICAL NRMM IDENTIFICATION ON VEHICLE

SNOWMOBILE LIFTING

To lift the snowmobile securely, place the loops of the lifting tool around the rollers at the front of the footrests.

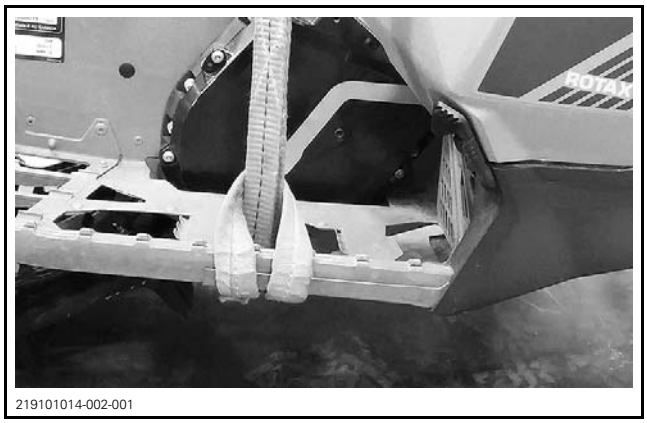

NOTICE Do not use other footrest openings or steering column to lift the snowmobile. Frame or steering system could be seriously damaged.

ENGINE EMISSIONS INFORMATION

MANUFACTURER'S RESPONSIBILITY

Manufacturers of engines must determine the exhaust emission levels for each engine horsepower family and certify these engines with the United States of America Environmental Protection Agency (EPA). An emissions control information label, showing emission levels and engine specifications, must be placed on each vehicle at the time of manufacture.

DEALER RESPONSIBILITY

When servicing any vehicle that carry an emissions control information label, adjustments must be kept within published factory specifications.

Replacement or repair of any emission related component must be executed in a manner that maintains emission levels within the prescribed certification standards.

Dealers are not to modify the engine in any manner that would alter the horsepower or allow emission levels to exceed their predetermined factory specifications.

Exceptions include manufacturer's prescribed changes.

OWNER RESPONSIBILITY

The owner/operator is required to have engine maintenance performed to maintain emission levels within prescribed certification standards.

The owner/operator is not to, and should not allow anyone else to modify the engine in any manner that would alter the horsepower or allow emissions levels to exceed their predetermined factory specifications.

EMISSION REGULATIONS

The vehicle you are servicing may have been certified to applicable emission regulations in your country or state. Not as an exhaustive list; this may include standards for engine exhaust emissions, crankcase emissions, permeation emissions and evaporative emissions. Servicing procedures in this manual must be strictly followed in order to keep the vehicle within the factory specifications. Failure to follow servicing procedures in this manual may lead a vehicle to be out of compliance with applicable emission regulations.

When servicing any vehicle; adjustments must be kept within published factory specifications. Replacement or repair of any emission related component must be executed in a manner that maintains emission levels within the applicable certification standards. Nobody is allowed to modify the engine in any manner that would alter the horsepower or allow emission levels to exceed their predetermined factory specifications. Exceptions include manufacturer's prescribed changes.

The owner/operator is required to have engine maintenance performed to maintain emission levels within the prescribed certification standards. The owner/operator is allowed and should not allow anyone else to modify the engine in any manner that would alter the horsepower or allow emissions levels to exceed their predetermined factory specifications.

MANUAL INFORMATION

MANUAL PROCEDURES

Many of the procedures in this manual are interrelated. Before undertaking any task, you should read and thoroughly understand the entire section or subsection in which the procedure is contained.

⚠ WARNING

Unless otherwise specified, the engine should be turned OFF and cold for all maintenance and repair procedures.

A number of procedures throughout the book require the use of special tools. Before starting any procedure, be sure that you have on hand all required tools, or their approved equivalents.

The use of RIGHT and LEFT indications in the text are always referenced to the driving position (sitting on the vehicle).

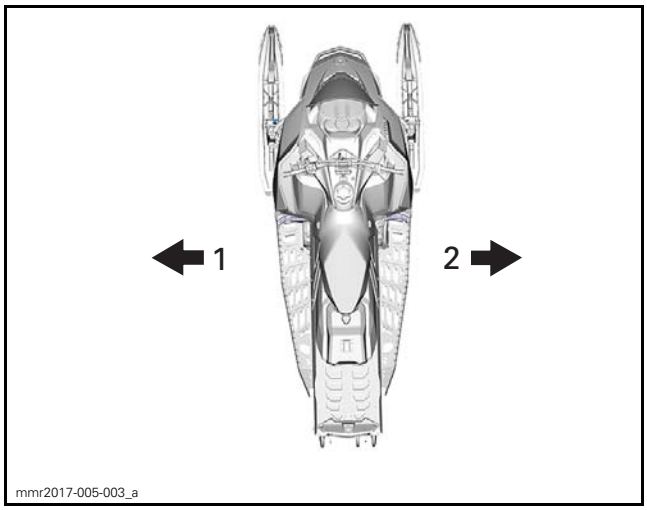

1. *Left*
2. *Right*

This manual uses technical terms which may be different from the ones of the *PARTS CATALOGS*.

When ordering parts always refer to the specific model *PARTS CATALOGS*.

NOTICE **Most fasteners are metric, and most components are built with parts dimensioned using the metric system. Consult the appropriate *PARTS CATALOG* to obtain and use the correct parts and fasteners. Mismatched or incorrect fasteners could cause damage to the vehicle.**

MANUAL LAYOUT

This manual is divided into many major sections as can be seen in the main table of contents at the beginning of the manual.

Each section is divided into various subsections, and again, each subsection has one or more divisions.

Illustrations and photos show the typical construction of various assemblies and, in all cases, may not reproduce the full detail or exact shape of the parts used in a particular model vehicle. However, they represent parts which have the same or a similar function.

TYPICAL PAGE

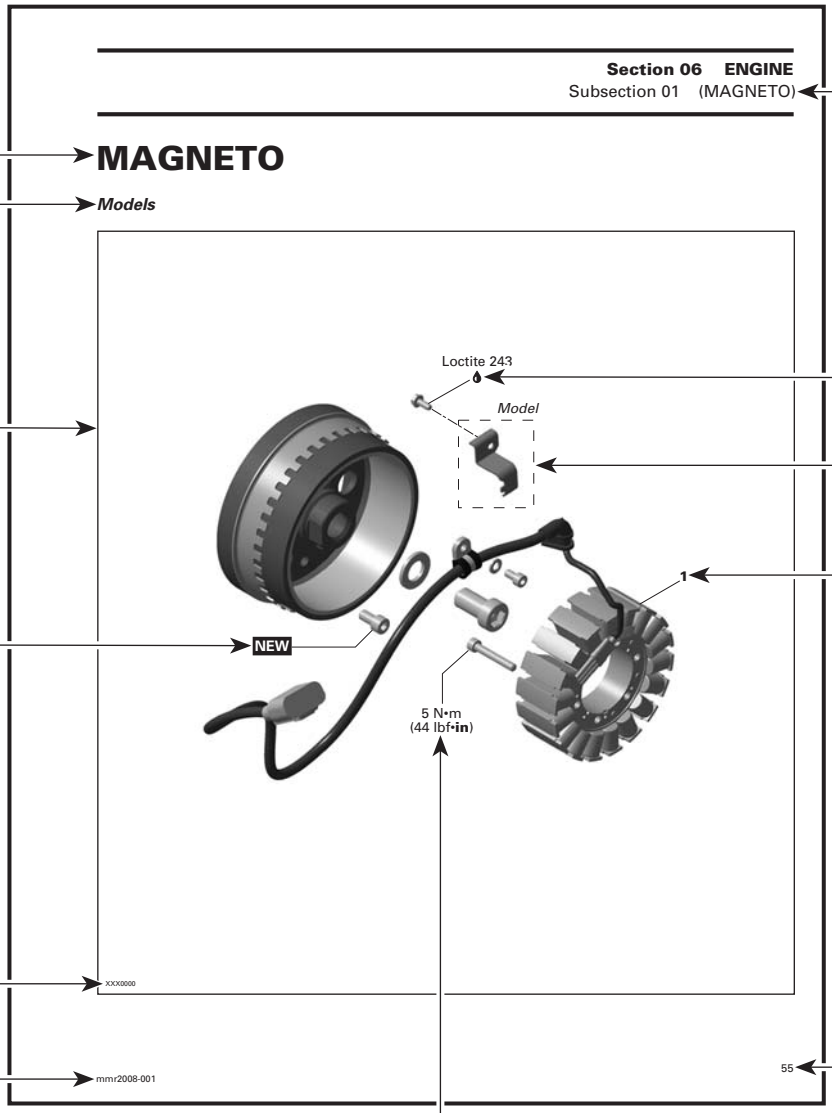

Page heading indicates section and subsection.

Subsection title

Indicates applicable models.

Exploded view assists you in identifying parts and their related positions.

Drop represents a service product to be applied.

Dotted box contains parts applicable to a specific model.

Bold face number is used to identify a part referred to the text.

NEW indicates that the part must be replaced with a new one.

Illustration number for publishing process.

Document number for publishing process.

Page number

Specific torque applicable to this installation.

NOTICE Pay attention to torque specifications.
Some of these are in lbf•**in** instead of lbf•ft.
Use appropriate torque wrench.

Typical_iso_2008_en

TYPICAL PAGE

Section 03 ENGINE
Subsection 09 (MAGNETO SYSTEM)

Tittle in bold indicates category of information to be carried out.

GENERAL

NOTE: The following procedures can be done without removing the engine.

During assembly/installation, use the torque values and service products as in the exploded views.

Reference to a specific section or subsection.

Clean threads before applying a threadlocker. Refer to *SELF-LOCKING FASTENERS* and *LOCTITE APPLICATION* sections at the beginning of this manual for complete procedure.

⚠ WARNING

Torque wrench tightening specifications must be strictly adhered to.
Locking devices (e.g.: locking tabs, elastic stop nuts, self-locking fasteners, etc.) must be replaced with new ones.

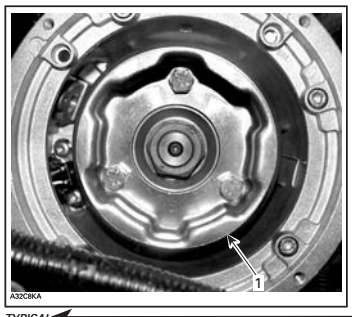

TYPICAL
1. Starting pulley

"TYPICAL" indicates a general view which may not represent exact details.

Call-outs pertaining to above illustration.

PROCEDURES

Indicates component procedures apply to.

MAGNETO FLYWHEEL

Magneto Flywheel Cleaning

Clean all metal components in a non-ferrous metal cleaner.

CAUTION: Clean magneto flywheel using only a clean cloth.

Indicates specific procedure to be carried out.

Magneto Flywheel Removal

Remove muffler, refer to the *EXHAUST SYSTEM* section.

Remove acoustic panel.

Remove rewind starter.

Remove starting pulley **no. 2**.

NOTE: To remove starting pulley bolts, hold magneto flywheel with a socket as shown.

TYPICAL

Illustration always follows text to which it applies.

Models

Remove the connecting flange retaining the rewind starter to the engine housing.

Italic bold face typesetting indicates a procedure applicable to a specific model(s).

mmr2008-001 57

Bold face number following part name refers to exploded view at beginning of subsection.

typical_txt_2008_en

TIGHTENING TORQUE

Tighten fasteners to the torque specified in the exploded view(s) and/or in the written procedure. When a torque is not specified, refer to the following table.

⚠ WARNING

Torque wrench tightening specifications must be strictly adhered to.
Locking devices when removed (e.g.: locking tabs, elastic stop nuts, self-locking fasteners, cotter pins, etc.) must be replaced.

In order to avoid a poor assembly, tighten screws, bolts, or nuts in accordance with the following procedure:

1. Manually screw all screws, bolts and/or nuts.
2. Apply half the recommended torque value.
3. Tighten fastener to the recommended torque value.

NOTICE **Be sure to use the recommended tightening torque for the specified fastener used.**

NOTE: When possible, always apply torque on the nut.

NOTE: Always torque screws, bolts and/or nuts using a crisscross pattern when multiple fasteners are used to secure a part (eg. a cylinder head). Some parts must be torqued according to a specific sequence and torque pattern as detailed in the installation procedure.

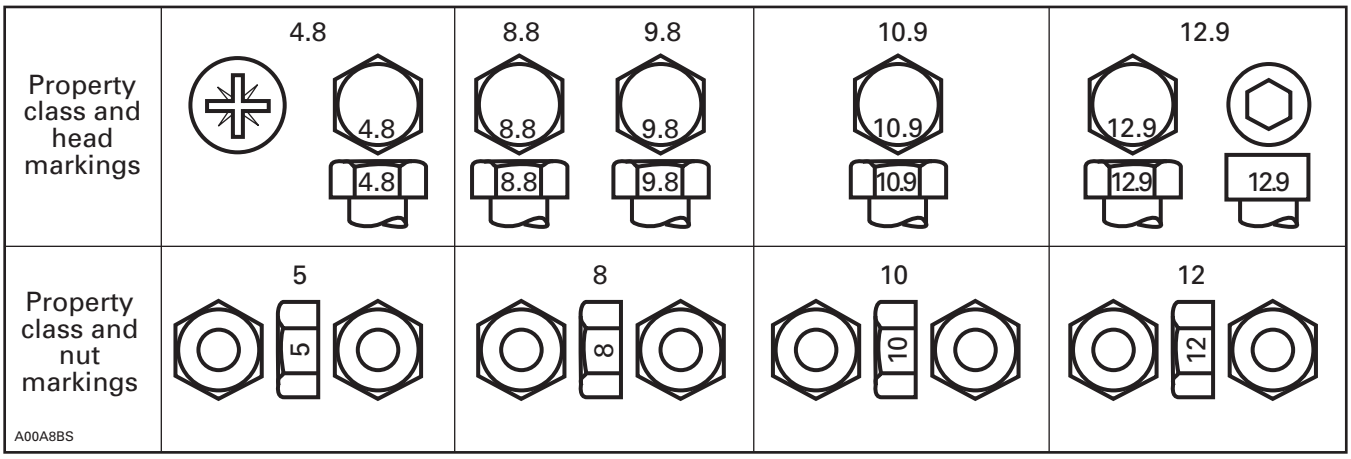

FASTENER SIZE	FASTENER GRADE/TORQUE			
	5.8 Grade	8.8 Grade	10.9 Grade	12.9 Grade
M4	1.5 – 2 N•m (13 – 18 lbf•**in**)	2.5 – 3 N•m (22 – 27 lbf•**in**)	3.5 N•m - 4 N•m (31 lbf•**in** - 35 lbf•**in**)	4 N•m - 5 N•m (35 lbf•**in** - 44 lbf•**in**)
M5	3 N•m - 3.5 N•m (27 lbf•**in** - 31 lbf•**in**)	4.5 N•m - 5.5 N•m (40 lbf•**in** - 49 lbf•**in**)	7 N•m - 8.5 N•m (62 lbf•**in** - 75 lbf•**in**)	8 N•m - 10 N•m (71 lbf•**in** - 89 lbf•**in**)
M6	6.5 N•m - 8.5 N•m (58 lbf•**in** - 75 lbf•**in**)	8 N•m - 12 N•m (71 lbf•**in** - 106 lbf•**in**)	10.5 – 15 N•m (93 – 133 lbf•**in**)	16 N•m (142 lbf•**in**)
M8	15 N•m (133 lbf•**in**)	25 N•m (18 lbf•ft)	32 N•m (24 lbf•ft)	40 N•m (30 lbf•ft)
M10	29 N•m (21 lbf•ft)	48 N•m (35 lbf•ft)	61 N•m (45 lbf•ft)	73 N•m (54 lbf•ft)
M12	52 N•m (38 lbf•ft)	85 N•m (63 lbf•ft)	105 N•m (77 lbf•ft)	128 N•m (94 lbf•ft)
M14	85 N•m (63 lbf•ft)	135 N•m (100 lbf•ft)	170 N•m (125 lbf•ft)	200 N•m (148 lbf•ft)

FASTENER INFORMATION

NOTICE Most components in the vehicles are built with parts dimensioned in the metric system. Most fasteners are metric and must not be replaced by customary fasteners or vice-versa. Mismatched or incorrect fasteners could cause damage to the vehicle or possible personal injury.

SELF-LOCKING FASTENERS PROCEDURE

TYPICAL — SELF-LOCKING FASTENER

The following describes common procedures used when working with self-locking fasteners.

Use a metal brush or a tap to properly clean a threaded hole, then use a solvent. Allow the solvent time to act, approximately 30 minutes, then wipe off. Solvent utilization is to ensure proper adhesion of the product used for locking the fastener.

LOCTITE® APPLICATION PROCEDURE

The following describes common procedures used when working with Loctite products.

NOTE: Always use proper strength Loctite product as recommended in this shop manual.

Threadlocker Application for Uncovered Holes (Bolts and Nuts)

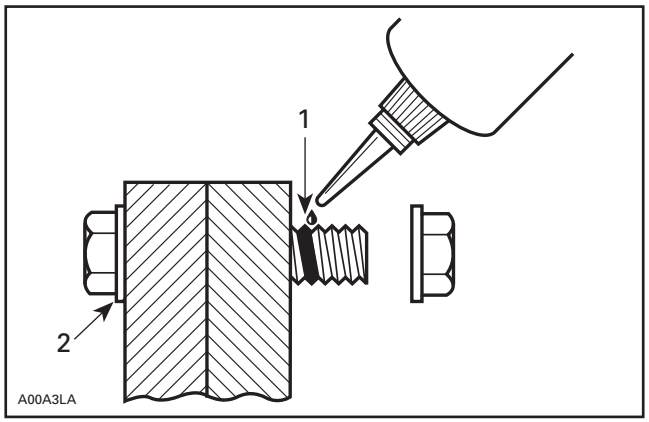

1. Apply here
2. Do not apply

1. Clean threads (bolt and nut) with solvent.
2. Apply Loctite 7649 (primer) on threads and allow to dry.
3. Choose proper strength Loctite threadlocker.
4. Fit bolt in the hole.
5. Apply a few drops of threadlocker at proposed tightened nut engagement area.
6. Position nut and tighten as required.

Threadlocker Application for Blind Holes

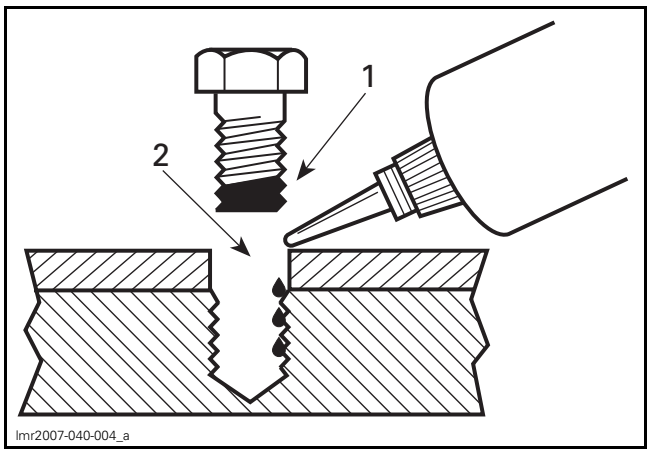

1. On fastener threads
2. On threads and at the bottom of hole

1. Clean threads (bolt and hole) with solvent.
2. Apply Loctite 7649 (primer) on threads (bolt and nut) and allow to dry for 30 seconds.
3. Choose proper strength Loctite threadlocker.
4. Apply several drops along the threaded hole and at the bottom of the hole.

5. Apply several drops on bolt threads.
6. Tighten as required.

Threadlocker Application for Stud Installation in Blind Holes

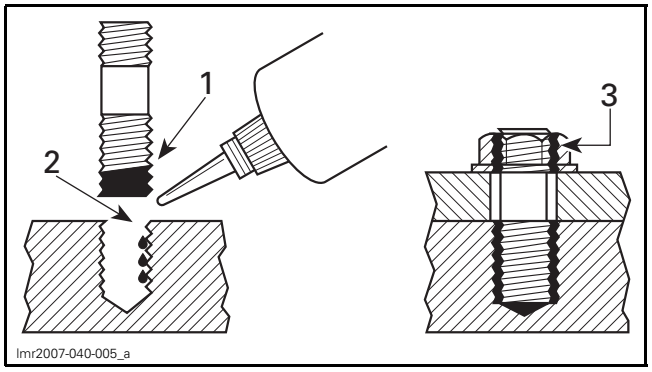

1. On stud threads
2. On threads and in the hole
3. On retaining nut threads

1. Clean threads (stud and hole) with solvent.
2. Apply Loctite 7649 (primer) on threads and allow to dry.
3. Put 2 or 3 drops of proper strength Loctite threadlocker on female threads and in hole.

NOTE: To avoid a hydro lock situation, do not apply too much Loctite.

4. Apply several drops of proper strength Loctite on stud threads.
5. Install stud.
6. Install cover, part, etc.
7. Apply a few drops of proper strength Loctite on uncovered stud threads.
8. Install and tighten retaining nut(s) as required.

Threadlocker Application for Pre-Assembled Parts

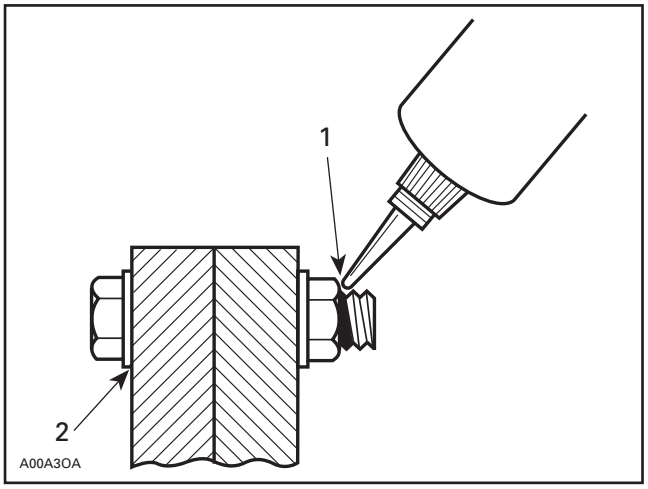

1. Apply here
2. Do not apply

1. Clean bolts and nuts with solvent.
2. Assemble components.
3. Tighten nuts.
4. Apply a few drops of proper strength Loctite on bolt/nut contact surfaces.
5. Avoid touching metal with tip of flask.

NOTE: For preventive maintenance on existing equipment, retighten nuts and apply proper strength Loctite on bolt/nut contact surfaces.

Threadlocker Application for an Adjustment Screw

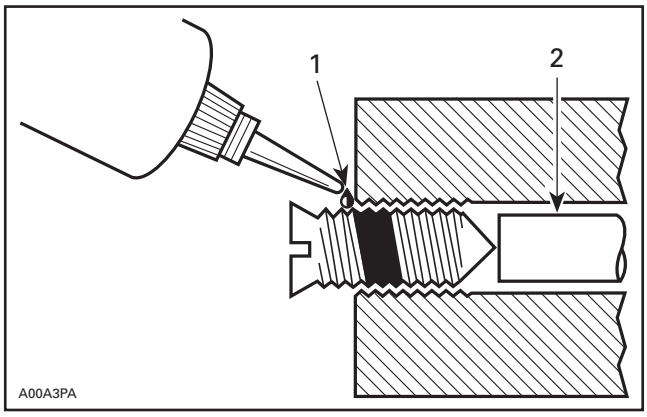

1. Apply here
2. Plunger

1. Adjust screw to proper setting.
2. Apply a few drops of proper strength Loctite threadlocker on screw/body contact surfaces.
3. Avoid touching metal with tip of flask.

NOTE: If it is difficult to readjust, heat screw with a soldering iron (232°C (450°F)).

Application for Stripped Thread Repair

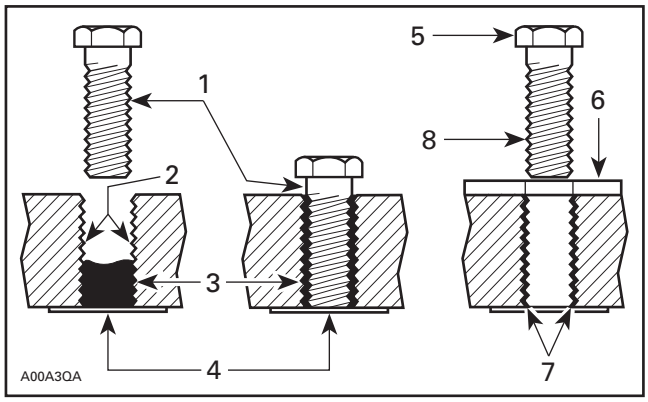

1. *Release agent*
2. *Stripped threads*
3. *Form-A-Thread*
4. *Tapes*
5. *Cleaned bolt*
6. *Plate*
7. *New threads*
8. *Threadlocker*

Standard Thread Repair

Follow instructions on Loctite FORM-A-THREAD 81668 package.

If a plate is used to align bolt:

1. Apply release agent on mating surfaces.
2. Put waxed paper or similar film on the surfaces.
3. Twist bolt when inserting it to improve thread conformation.

NOTE: NOT intended for engine stud repairs.

Repair of Small Holes/Fine Threads

Option 1: Enlarge damaged hole, then follow *STANDARD THREAD REPAIR* procedure.

Option 2: Apply FORM-A-THREAD on the screw and insert in damaged hole.

Permanent Stud Installation (Light Duty)

1. Use a stud of the desired thread length.
2. DO NOT apply release agent on stud.
3. Follow Standard Thread Repair procedure.
4. Allow 30 minutes for Loctite FORM-A-THREAD to cure.
5. Complete part assembly.

Gasket Compound Application

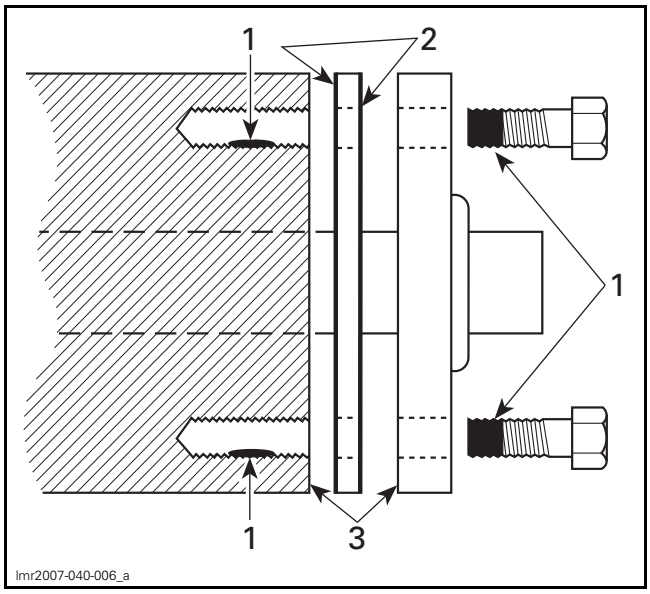

1. *Proper strength Loctite*
2. *Loctite Primer N (P/N 293 800 041) and Gasket Eliminator 518 (P/N 293 800 038) on both sides of gasket*
3. *Loctite Primer N only*

1. Remove old gasket and other contaminants using Loctite chisel (gasket remover). Use a mechanical means only if necessary.

NOTE: Avoid grinding.

2. Clean both mating surfaces with solvent.
3. Spray Loctite Primer N on both mating surfaces and on both sides of gasket and allow to dry 1 or 2 minutes.
4. Apply Loctite 518 on both sides of gasket, using a clean applicator.
5. Place gasket on mating surfaces and assemble parts immediately.

NOTE: If the cover is bolted to blind holes, apply proper strength Loctite in the hole and on threads. Tighten fastener.

If holes are sunken, apply proper strength Loctite on bolt threads.

6. Tighten as usual.

Threadlocker Application for Mounting on a Shaft

Mounting with a Press

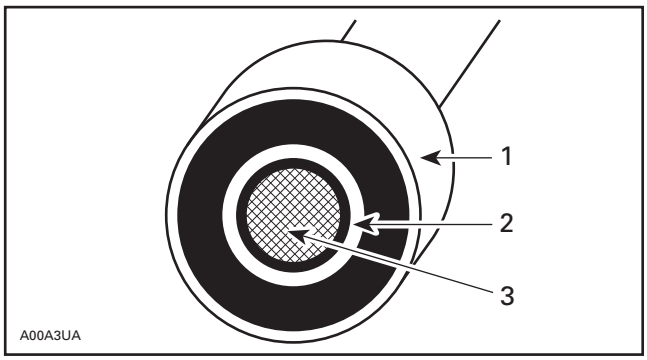

1. Bearing
2. Proper strength Loctite
3. Shaft

1. Clean shaft external contact surface.
2. Clean internal contact surface of part to be installed on shaft.
3. Apply a strip of proper strength Loctite on circumference of shaft contact surface at insertion or engagement point.

NOTE: Retaining compound is always forced out when applied on shaft.

4. DO NOT use antiseize Loctite or any similar product.
5. No curing period is required.

Mounting in Tandem

1. Apply retaining compound on internal contact surface (bore) of parts to be installed.
2. Continue parts assembly as per previous illustration.

Threadlocker Application for Case-In Components (Metallic Gaskets)

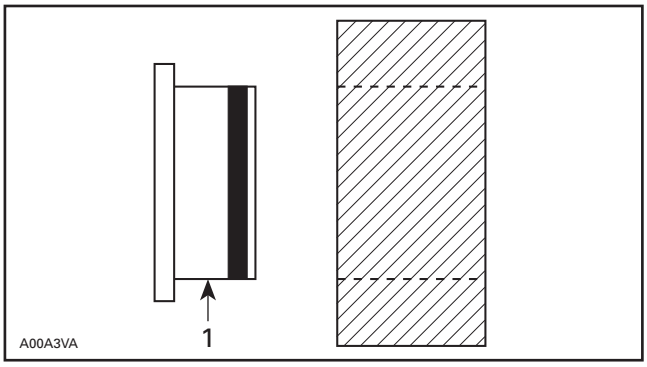

1. Proper strength Loctite

1. Clean inner housing diameter and outer gasket diameter.
2. Spray housing and gasket with Loctite 7649 (primer).
3. Apply a strip of proper strength Loctite on leading edge of outer metallic gasket diameter.

NOTE: Any Loctite product can be used here. A low strength liquid is recommended as normal strength and gap are required.

4. Install according to standard procedure.
5. Wipe off excess product.
6. Allow 30 minutes for product to cure.

NOTE: Normally used on worn-out housings to prevent leaking or sliding.

It is generally not necessary to remove gasket compound applied on outer gasket diameter.

12 V BATTERY SUPPLY CABLE
(P/N 529 035 997)

Page: 77, 144, 160, 163, 171

BALL JOINT EXTRACTOR
(P/N 529 035 827)

Page: 259

BALL JOINT INSTALLER SUPPORT
(P/N 529 036 398)

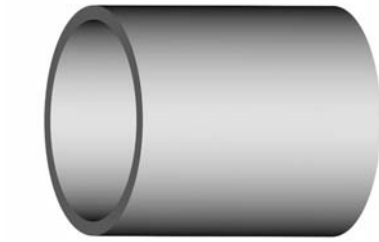

Page: 262

BALL JOINT INSTALLER
(P/N 529 036 399)

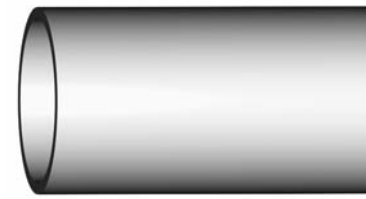

Page: 262

BALL JOINT REMOVER SUPPORT
(P/N 529 036 400)

Page: 262

BEARING PULLER DRIVEN SUPPORT
(P/N 529 036 485)

Page: 209

BEARING PULLER/PUSHER
(P/N 529 036 111)

Page: 234

BEARING PULLER/PUSHER
(P/N 529 036 112)

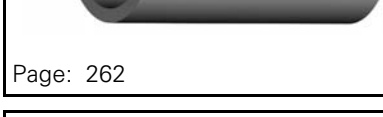

Page: 234

CALIPER PULLER
(P/N 529 036 145)

Page: 223

CIRCLIP INSTALLER/REMOVER
(P/N 529 036 375)

Page: 198–199

CLUTCH HOLDER
(P/N 529 036 369)

Page: 197, 206

COUNTERSHAFT ADAPTER
(P/N 529 036 424)

Page: 215

COUNTERSHAFT BEARING INSTALLER
(P/N 529 036 066)

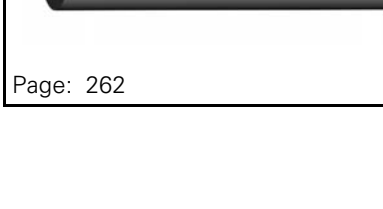

Page: 216

SERVICE TOOLS INDEX

COUNTERSHAFT BEARING REMOVER
(P/N 529 036 065)

Page: 215

COUNTERSHAFT SUPPORT
(P/N 529 036 067)

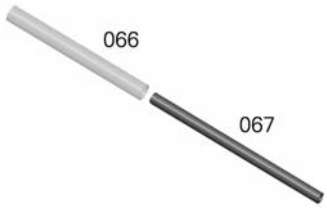

Page: 215

DIAGNOSTIC CABLE
(P/N 710 000 851)

Page: 77, 160

DRIVE PULLEY OPENING TOOL
(P/N 529 036 378)

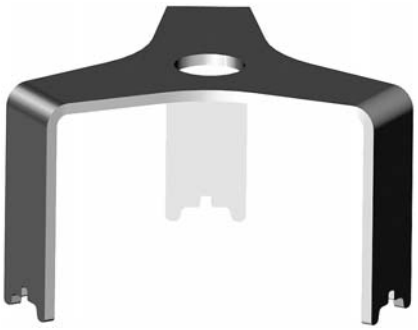

Page: 198, 202

DRIVE PULLEY SUPPORT
(P/N 529 036 371)

Page: 198–199, 201

DRIVEN PULLEY SPRING COMPRESSOR
(P/N 529 036 182)

Page: 209

ECM ADAPTER TOOL
(P/N 529 036 166)

Page: 116, 133, 153–154, 160–161, 190

ECM TERMINAL REMOVER 2.25
(P/N 529 036 175)

Page: 116, 133

ECM TERMINAL REMOVER 3.36
(P/N 529 036 174)

Page: 116, 133

ENGINE LIFTING HOOK
(P/N 529 035 829)

Page: 19

ENGINE LIFTING TOOL
(P/N 529 036 402)

Page: 19

FLUKE 115 MULTIMETER
(P/N 529 035 868)

Page: 145, 147, 153, 160, 167, 176

GREASE INJECTOR
(P/N 529 036 376)

Page: 204

LARGE HOSE PINCHER
(P/N 529 032 500)

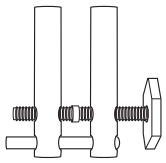

Page: 59

LEAK TEST KIT
(P/N 529 033 100)

Page: 91

MPI-2 INTERFACE CARD
(P/N 529 036 018)

Page: 77, 160

MPI-3 INTERFACE CARD
(P/N 529 036 353)

Page: 77, 160

OETIKER PLIER
(P/N 295 000 070)

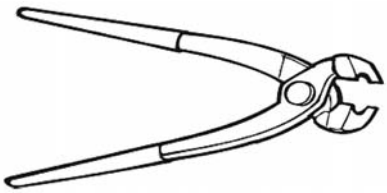

Page: 94

PDRIVE PULLER
(P/N 529 036 370)

Page: 197–198

POWER INTERFACE
(P/N 515 177 223)

Page: 77, 144, 158, 160, 163, 171

PRESSURE GAUGE
(P/N 529 036 395)

Page: 92

PROTECTIVE CAP
(P/N 529 036 150)

Page: 223

PULLEY SPRING COMPRESSOR TOOL
(P/N 529 036 373)

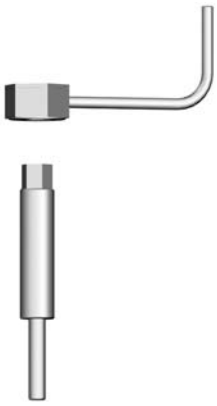

Page: 198–199, 201–202

RADIATOR INSTALLATION GAUGES
(P/N 529 036 422)

Page: 357

REMOVING AXLE TOOL
(P/N 529 036 372)

Page: 198, 200–202

SHOCK ABSORBER SUPPORTS
(P/N 529 036 186)

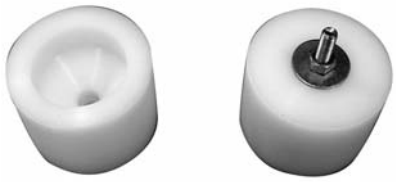

Page: 275

SERVICE TOOLS INDEX

SMALL HOSE PINCHER
(P/N 295 000 076)

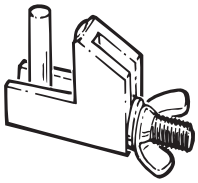

Page: 59, 69, 91

SPRING COMPRESSOR
(P/N 529 036 184)

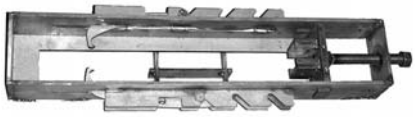

Page: 258

SPRING INSTALLER/REMOVER
(P/N 529 035 983)

Page: 37, 42, 47–49

SUPERTANIUM DRILL BIT 3/16"
(P/N 529 031 800)

Page: 321, 337, 348

SUSPENSION ARM SUPPORT
(P/N 529 035 637)

Page: 260

T FITTING FUEL PRESSURE
(P/N 529 036 509)

Page: 92

TENSIOMETER
(P/N 414 348 200)

Page: 185, 193, 245

TEST CAP
(P/N 529 035 991)

Page: 58, 69

TRACK CLEAT INSTALLER
(P/N 529 036 044)

Page: 247

UPPER GEAR RETAINING TOOL
(P/N 529 036 110)

Page: 17, 208

VACUUM/PRESSURE PUMP
(P/N 529 021 800)

Page: 58, 69, 91

REFER TO PERIODIC MAINTENANCE SCHEDULE (Trail 600 EFI and E-TEC)/ (Deep Snow E-TEC)

STORAGE PROCEDURE

During summer, or when a snowmobile is not in use for more than three months, proper storage is necessary.

For detailed procedure refer to appropriate *SHOP MANUAL* subsections.

STORAGE	
VEHICLE	Clean the vehicle
ENGINE	Lubricate engine. Refer to *ENGINE LUBRICATION* procedure.
	Block muffler with rags
	Add fuel stabilizer to fuel following the product manufacturer recommendations Run the engine after adding the product to the fuel
DRIVE SYSTEM AND BRAKE	Lubricate brake lever pivot
	Lift rear of vehicle until track is clear of the ground. Do not release track tension
SUSPENSION	Inspect and lubricate rear suspension
	Lubricate front and rear suspension
ELECTRICAL SYSTEM	Charge battery monthly to keep it fully charged during storage

CAUTION Use appropriate lifting device or have assistance to share lifting stress. If a lifting device is not used, use proper lifting techniques, notably using your legs force. Do not attempt to lift the rear of vehicle if it is above your limits.

NOTICE The snowmobile has to be stored in a cool and dry place and covered with an opaque but ventilated tarpaulin. This will prevent sun rays and grime from affecting plastic components and vehicle finish.

PROCEDURES

ENGINE LUBRICATION

Engine Storage Mode Using BUDS2

Connect the vehicle to the BRP diagnostic software (BUDS2). Refer to *COMMUNICATION TOOLS AND B.U.D.S.* subsection.

Select:

– **Functions** page
– **Vehicle** or **ECM** button
– **Routines** tab.

Click on the **Activate Storage** button.

Engine Storage Mode Using Multi-Function Gauge

Like other engines, the E-TEC has to be properly lubricated at storage for internal parts protection. The E-TEC system offers a built-in engine storage lubrication function (summerization) that can be initiated by the operator.

To engage procedure, do the following:

1. Place the vehicle in a well ventilated area.
2. Start the engine and let it run at idle speed until it reaches its operating temperature (watch the coolant temperature on the display or verify that the rear heat exchanger becomes warm).
3. Push the SET (S) button to select odometer mode.

mmr2009-004-002

NOTE: The storage mode does not function in other modes (trip A, trip B and hr trip).

4. Repeatedly depress the HI/LOW beam switch rapidly, then, **while doing this**, press and hold the **SET button** until PUSH S appears on the display.

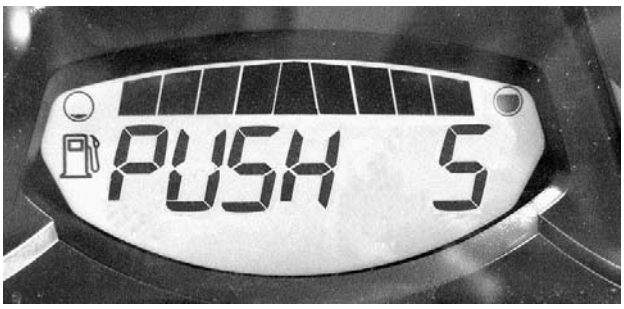

mmr2009-004-003

5. Release all buttons when gauge displays **PUSH "S"** appears.
6. Again, press and hold the SET (S) button for 2 - 3 seconds.

NOTE: The gauge will display OIL when the storage procedure is initiated.

7. When gauge displays **OIL**, release button and wait for the lubrication function to end.

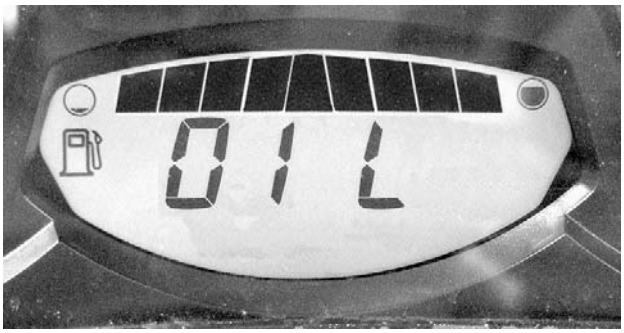

mmr2009-004-004

Do not touch anything during engine lubrication cycle.

The engine lubrication function takes approximately 1 minute. During this time, engine RPM will increase slightly to approximately 1600 RPM and the oil pump will "oil flood" the engine.

At the end of engine lubrication function, the ECM will stop the engine.

8. Remove tether cord cap from engine cut-off switch.

NOTICE **Do not start the engine during storage period.**

PRESEASON PREPARATION

Proper vehicle preparation is necessary when a vehicle has not been used for more than three months. Using the *MAINTENANCE SCHEDULE*, perform the items titled *EVERY YEAR AT PRESEASON*.

ENGINE REMOVAL AND INSTALLATION

SERVICE TOOLS

Description	Part Number	Page
ENGINE LIFTING HOOK	529 035 829	19
ENGINE LIFTING TOOL	529 036 402	19
UPPER GEAR RETAINING TOOL	529 036 110	17

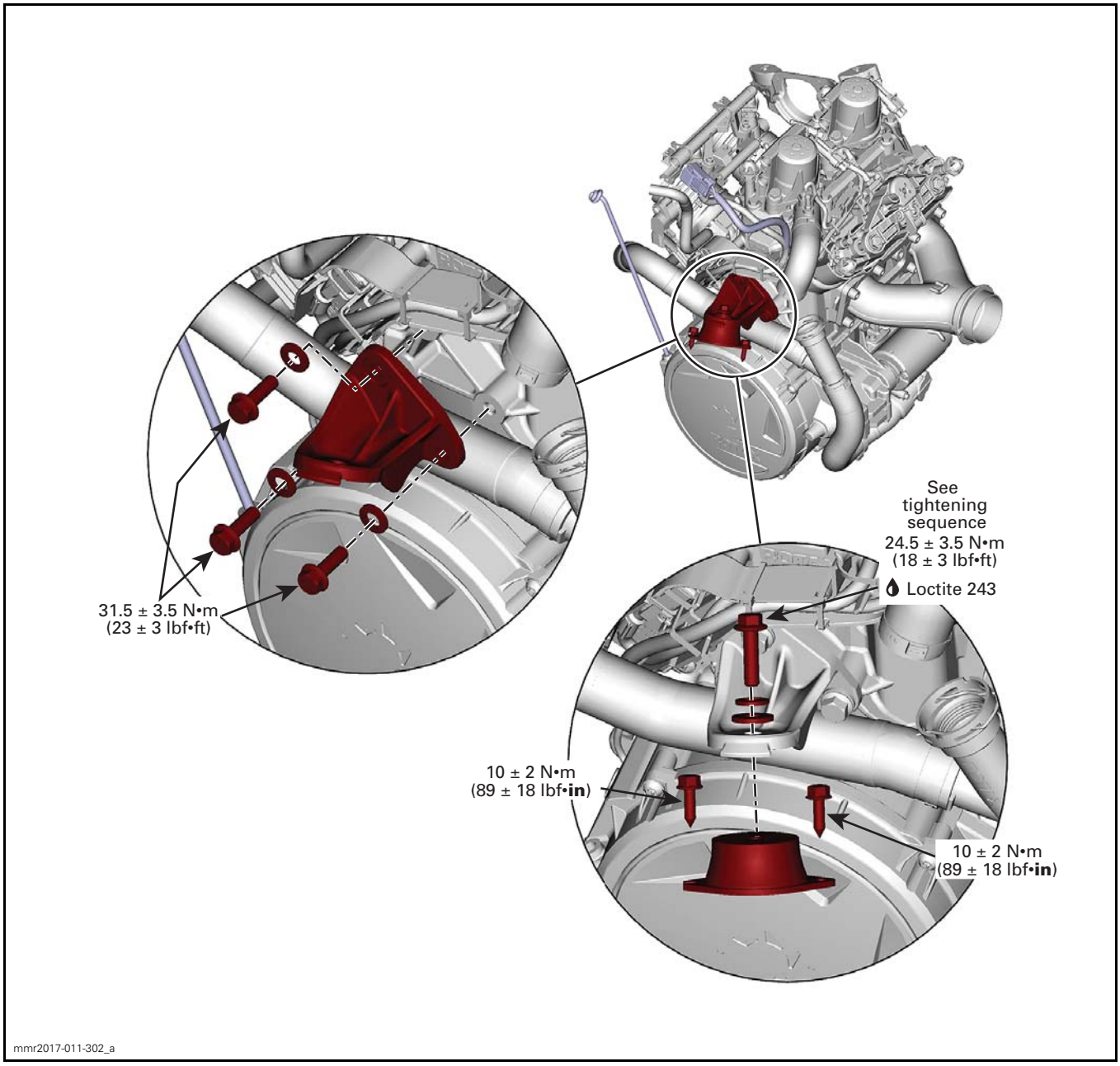

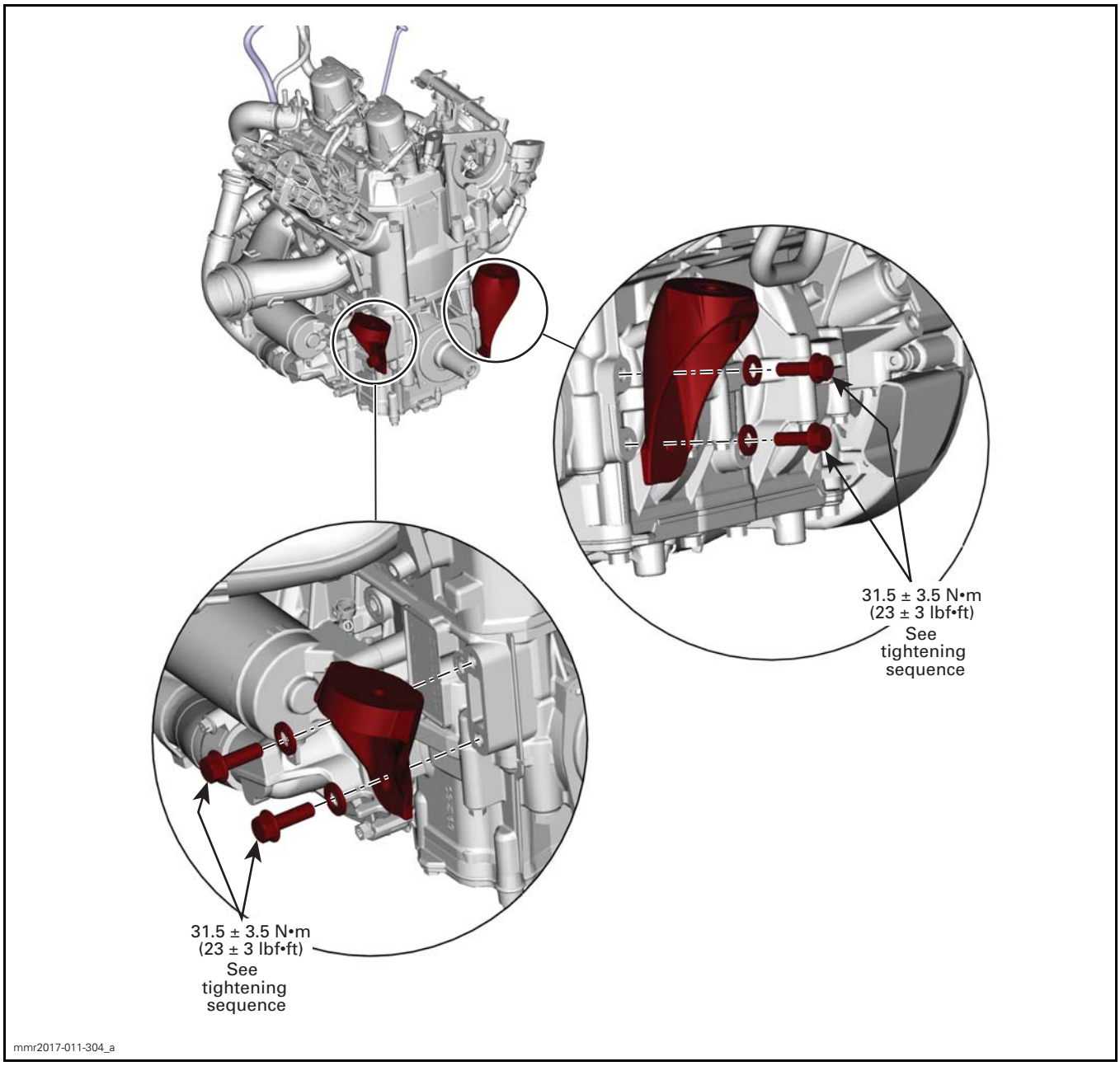
31.5 ± 3.5 N•m
(23 ± 3 lbf•ft)
See
tightening
sequence
31.5 ± 3.5 N•m
(23 ± 3 lbf•ft)
See
tightening
sequence
mmr2017-011-304_a

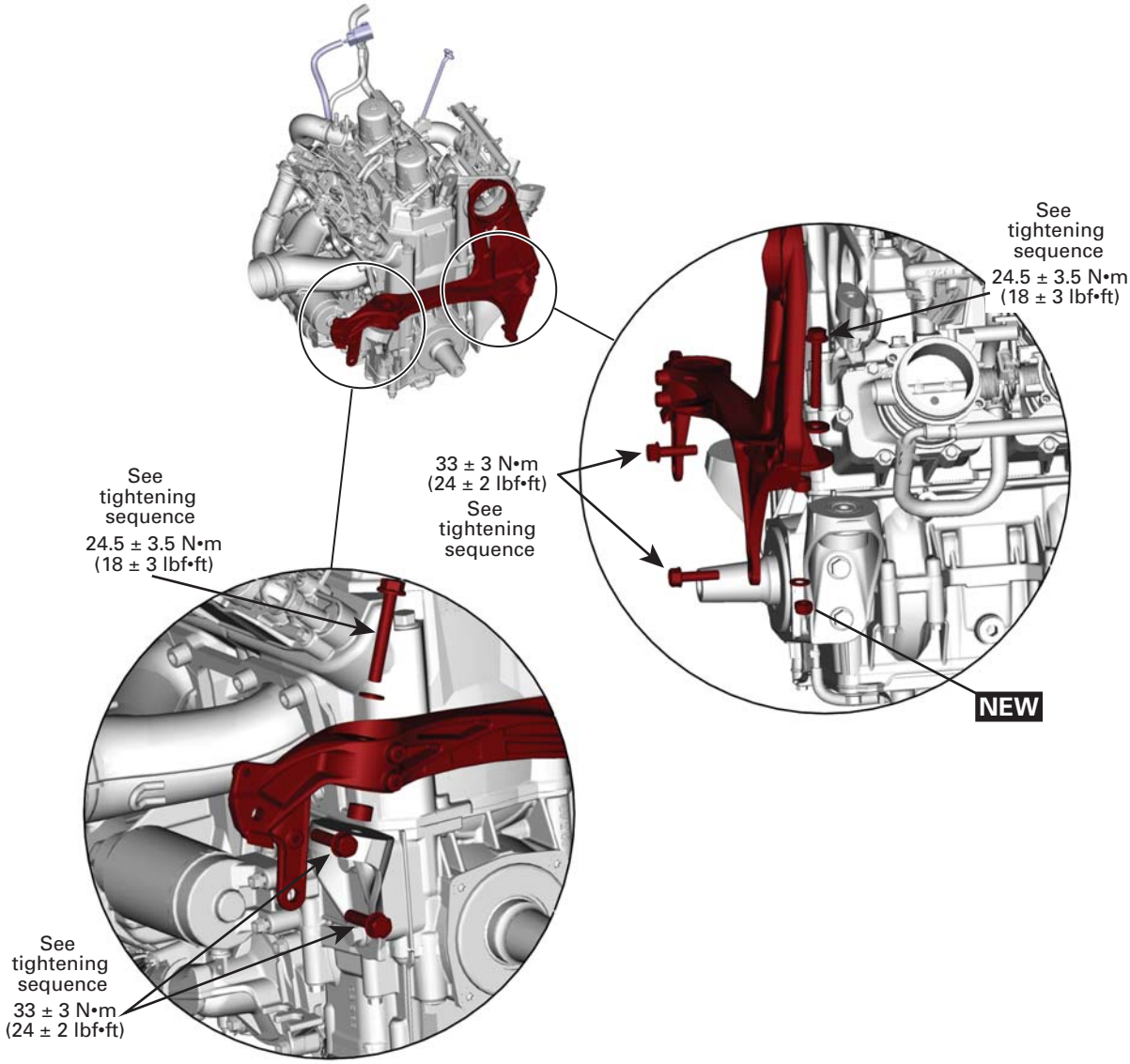

NEW = Component must be replaced when removed.

mmr2017-011-303_a

GENERAL

During assembly/installation, use the torque values and service products as shown in the exploded views.

Clean threads before applying a threadlocker. Refer to *SELF-LOCKING FASTENERS* and *LOCTITE APPLICATION* at the beginning of this manual for complete procedure.

⚠ WARNING

Torque wrench tightening specifications must be strictly adhered to.
Locking devices when removed (e.g.: locking tabs, elastic stop nuts, cotter pin, etc.) must be replaced with new ones.

NOTICE **Hoses, cables and locking ties removed during a procedure must be reinstalled as per factory standards.**

PROCEDURES

ENGINE

Removing the Engine

1. Place vehicle at workstation that will have access to an engine-lifting hoist.
2. Remove fuel pressure. Refer to *ELECTRIC FUEL PUMP* in *FUEL TANK AND FUEL PUMP* subsection.
3. Disconnect the battery.

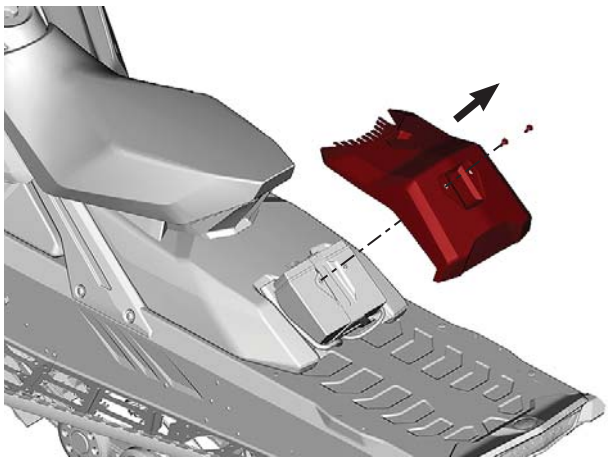

mmr2017-011-001_a

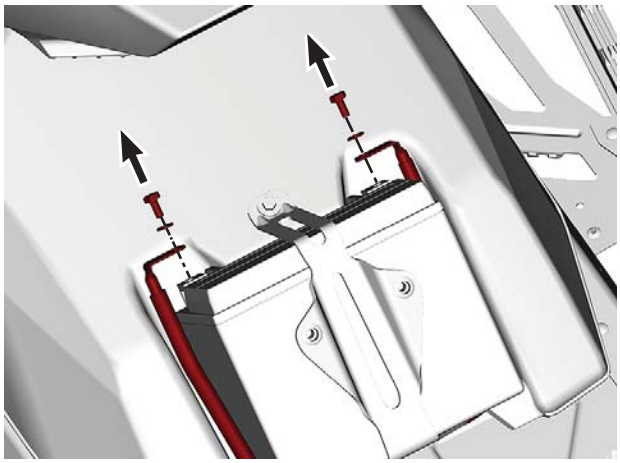

mmr2017-011-002_a

4. Remove the following parts. If required, refer to *BODY* subsection.

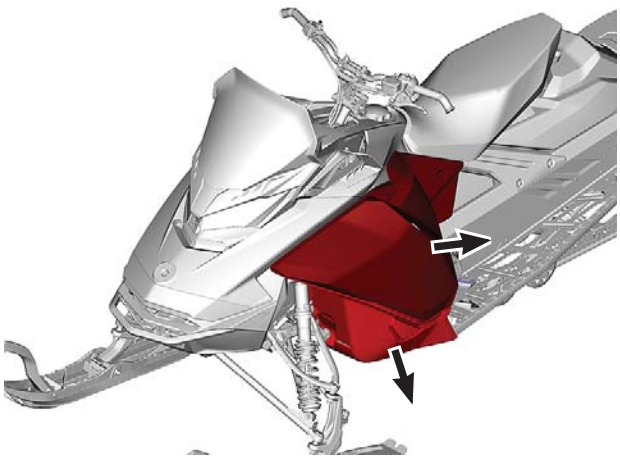

mmr2017-011-003_a

LH SIDE PANEL AND LH BOTTOM PAN

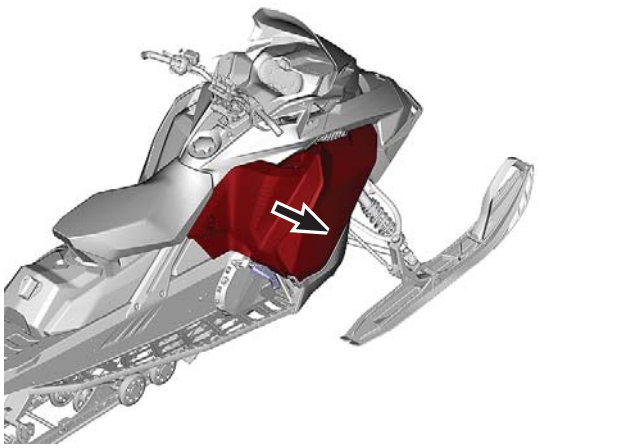

mmr2017-015-100_a

RH SIDE PANEL

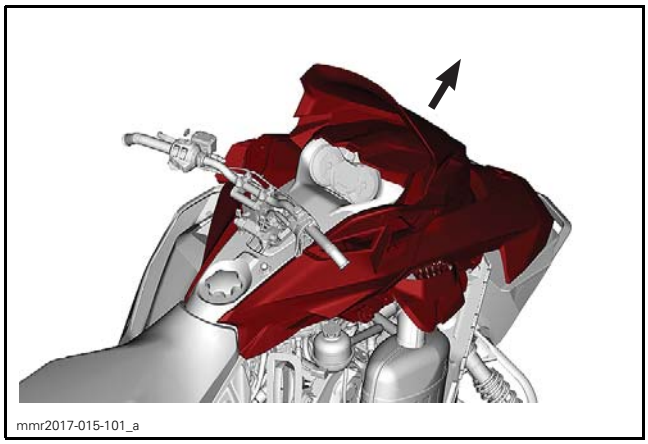

UPPER BODY MODULE

5. Remove the drive belt guard and acoustic panel.

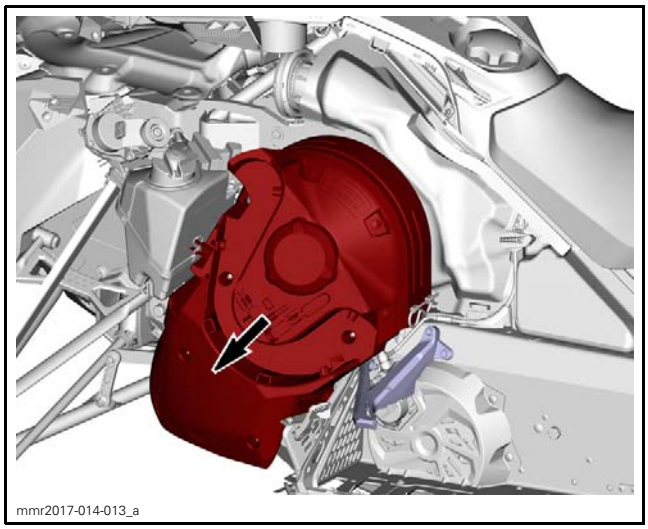

DRIVE BELT GUARD

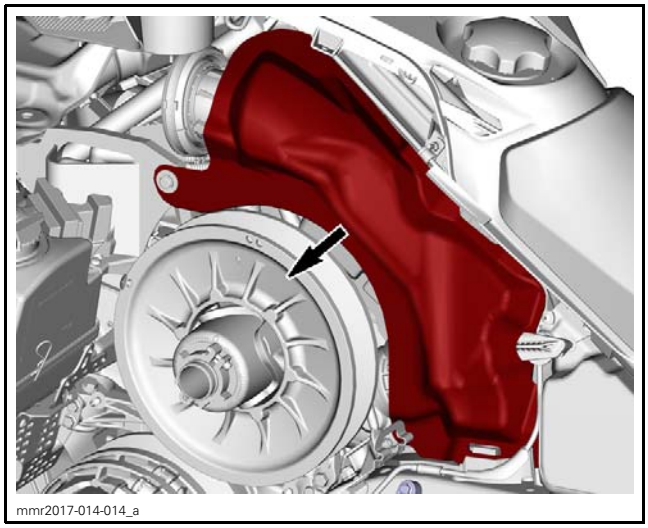

ACOUSTIC PANEL

6. Disconnect the BLACK wire from the starter solenoid.

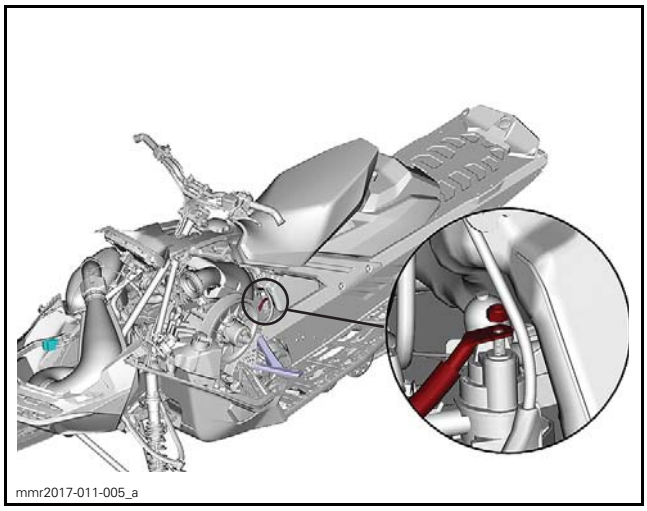

7. Remove the muffler and the tuned pipe. If required, refer to *EXHAUST SYSTEM* subsection.

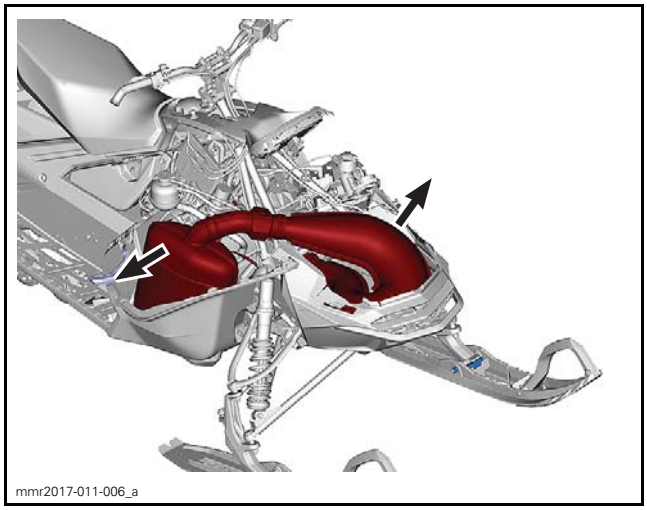

8. Place a drain pan under the front of the vehicle.
9. Drain the coolant by detaching the front cooling hose from the engine then lift the rear of the vehicle

NOTE: At the installation, replace the ear clamp by an hose clamp.

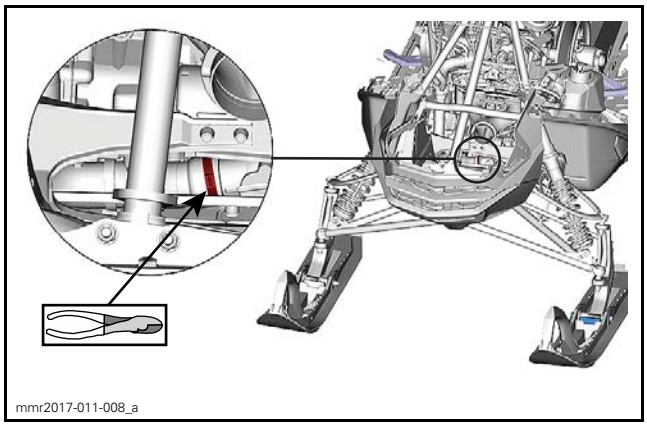

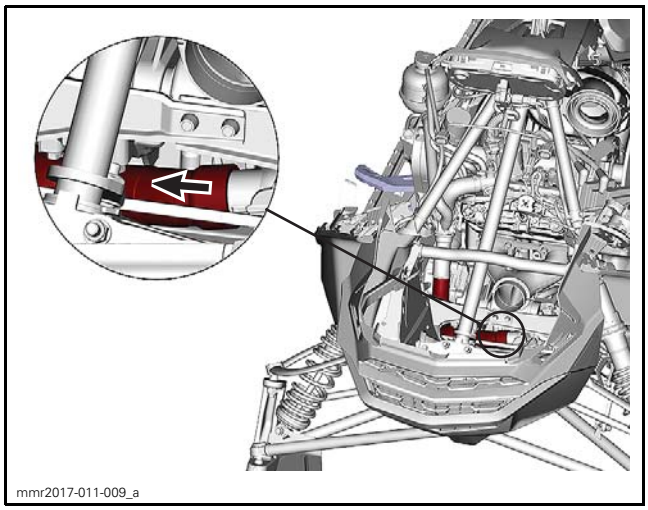
mmr2017-011-009_a

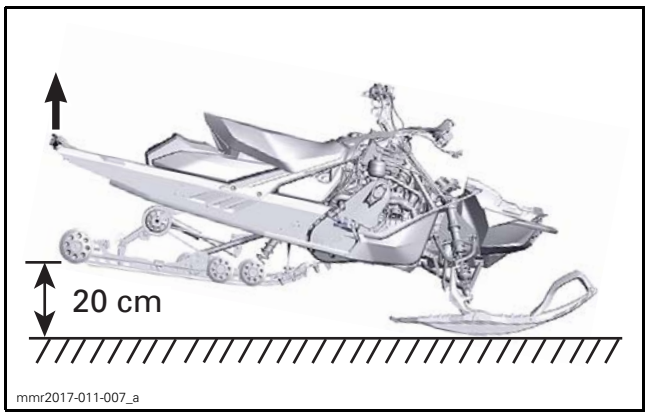

mmr2017-011-007_a

10. If equipped, remove the rewind starter handle and its housing.

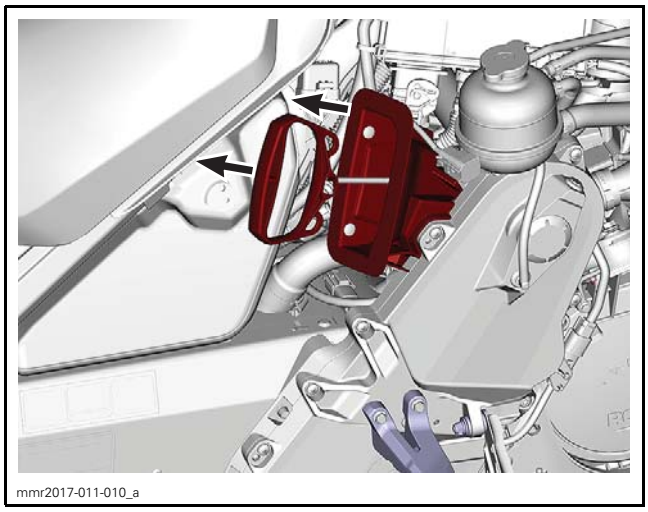
mmr2017-011-010_a

11. Unplug the inlet and outlet cooling hoses from the tunnel.

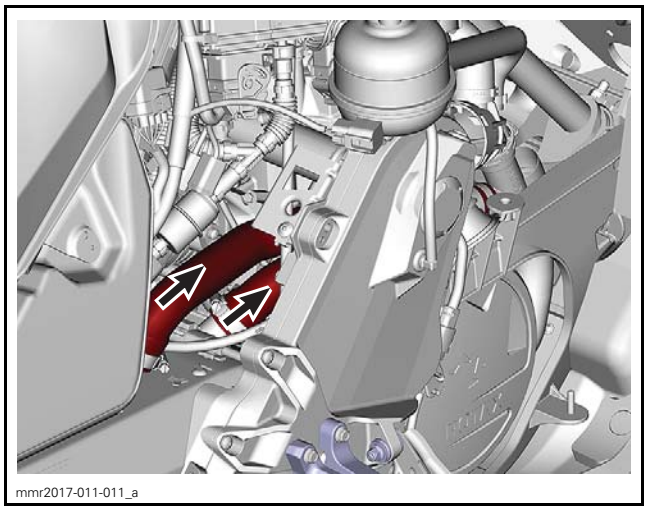
mmr2017-011-011_a

12. Detach the coolant tank from the top of the chaincase and unplug the vent hose from the tank.

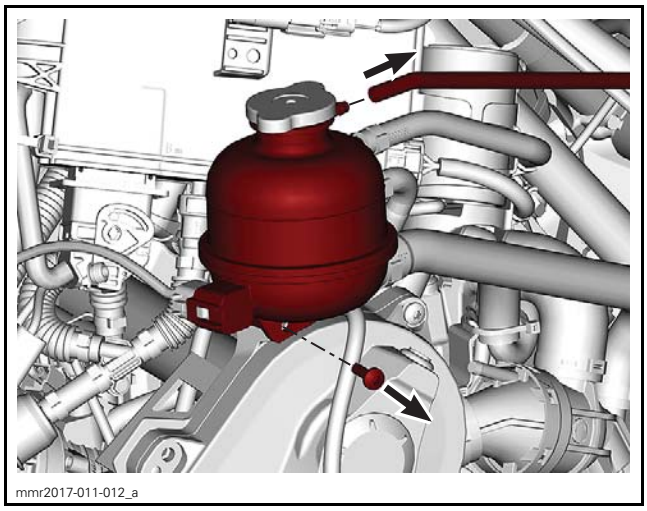
mmr2017-011-012_a

13. Disconnect the ECM connector A and the magneto connector.
14. Cut the locking tie retaining the engine harness to the capacitor support.

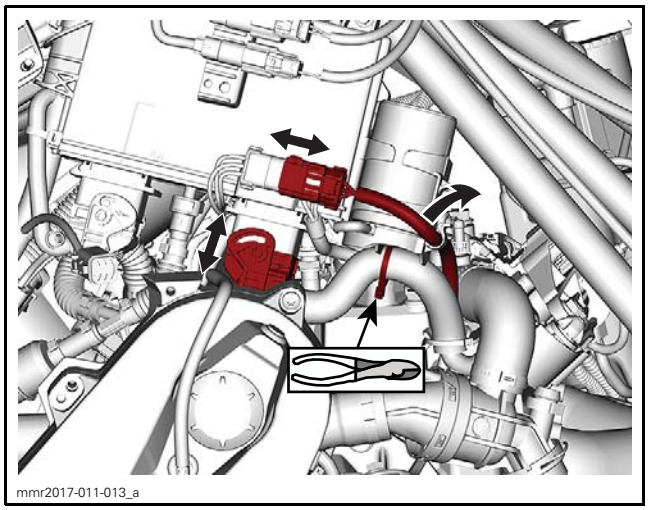
mmr2017-011-013_a

15. Unscrew fuel hoses from fuel rails.

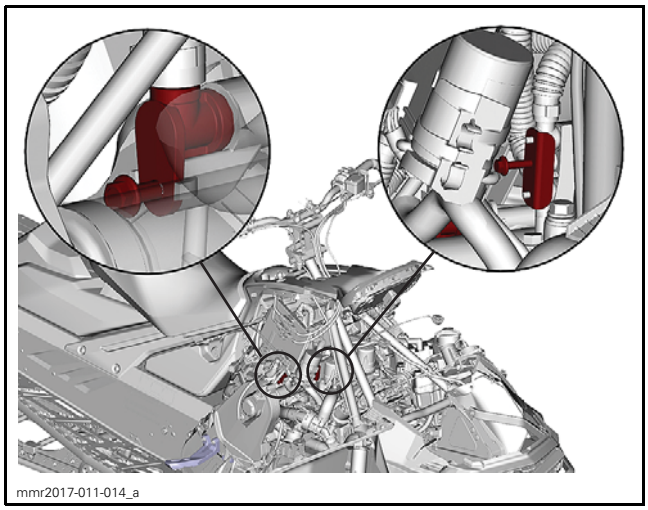
mmr2017-011-014_a

16. Apply parking brake and remove the upper gear screw and the conical spring washer.

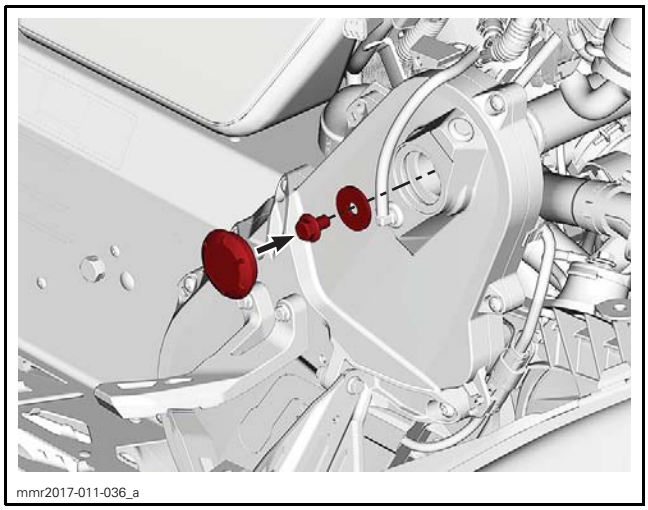
mmr2017-011-036_a

17. Install the UPPER GEAR RETAINING TOOL (P/N 529 036 110) on countershaft end.

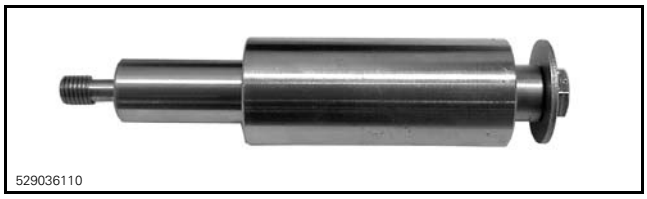
529036110

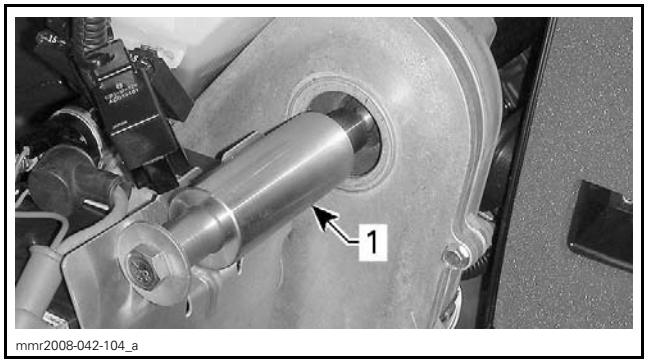

mmr2008-042-104_a

TYPICAL
1. Upper gear retaining tool

18. Remove the engine support screw.

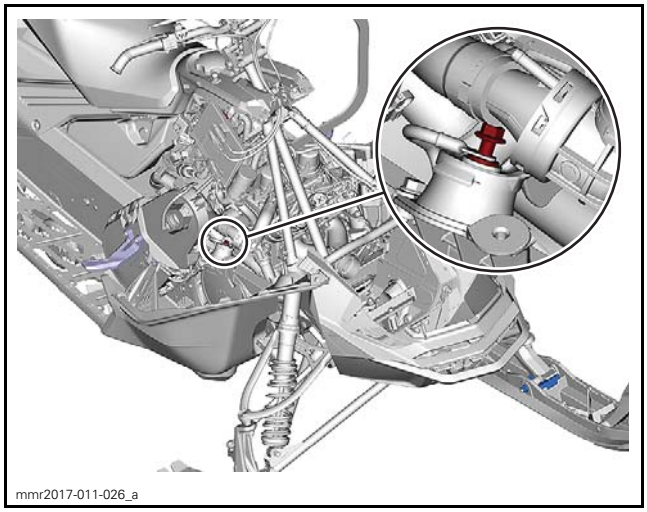
mmr2017-011-026_a

19. Unclip the fuel hose from the primary air silencer.

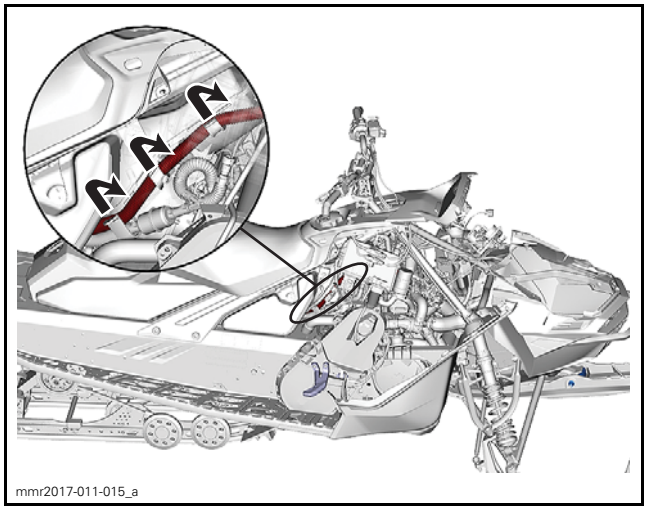
mmr2017-011-015_a

20. Remove engine cover.
    20.1 Remove the 3 screws.
    20.2 Pull on both halves of cover to remove.

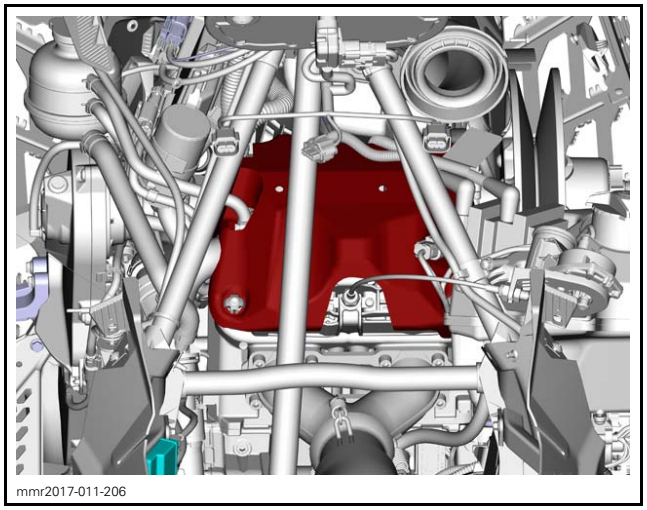
mmr2017-011-206

21. Detach the RAVE cable from the RAVE valve. Refer to *RAVE* subsection for proper procedure.

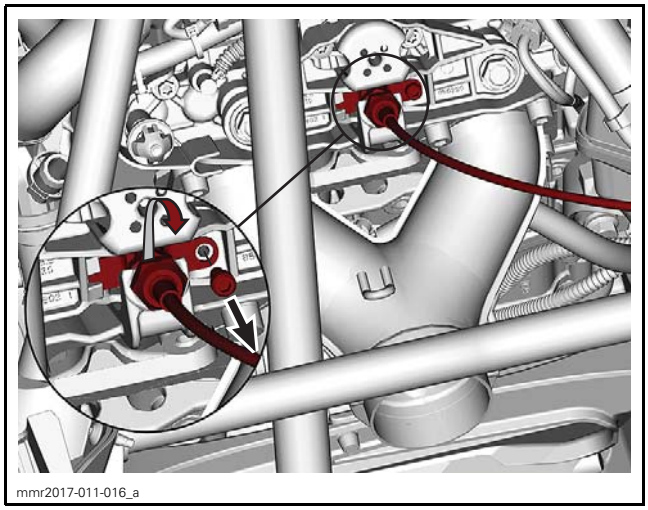
mmr2017-011-016_a

22. Unscrew the oil tank support.

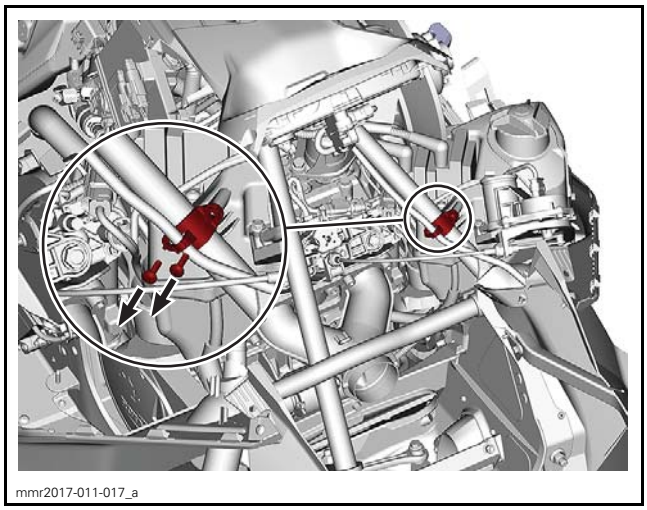
mmr2017-011-017_a

23. From underneath of the oil tank, detach both injection oil hoses from their support.

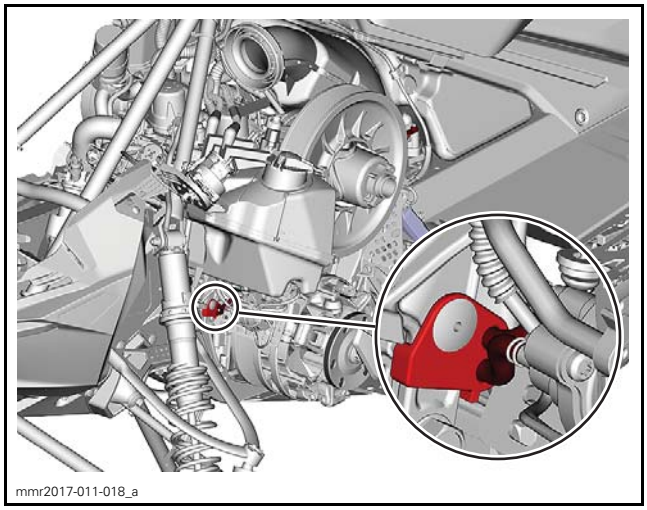
mmr2017-011-018_a

24. Detach the throttle cable from the throttle housing.

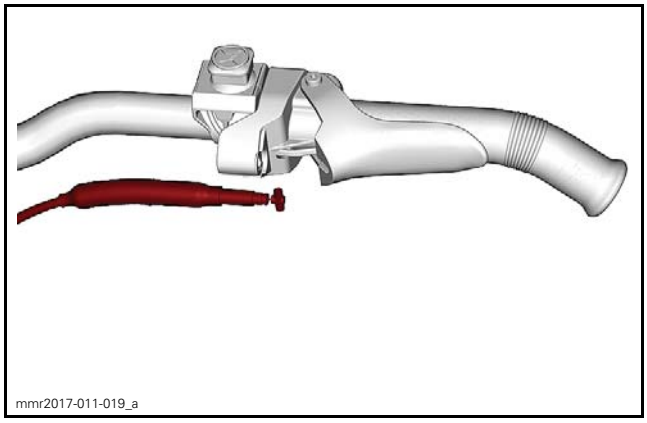
mmr2017-011-019_a

25. Remove the knock sensor from cylinder head cover.

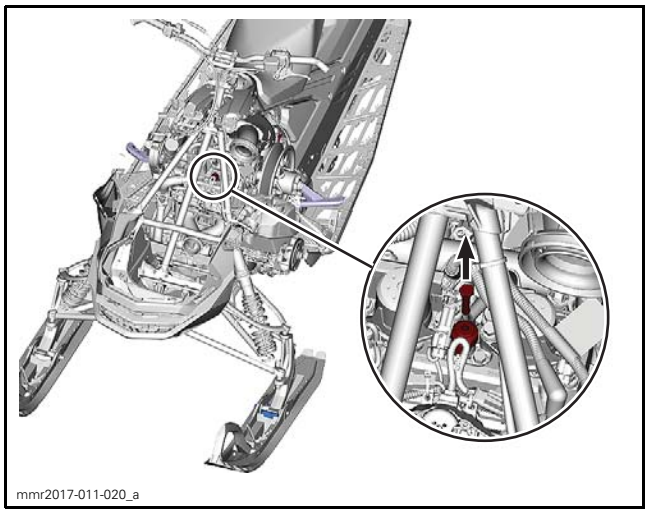
mmr2017-011-020_a

26. Install the engine lifting tool instead of knock sensor.

REQUIRED TOOL	
ENGINE LIFTING TOOL (P/N 529 036 402)	

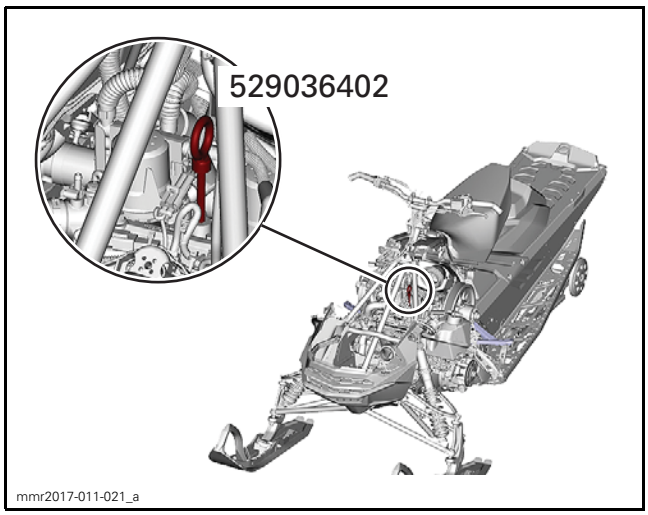

mmr2017-011-021_a

27. Install the engine lifting hook.

REQUIRED TOOL	
ENGINE LIFTING HOOK (P/N 529 035 829)	

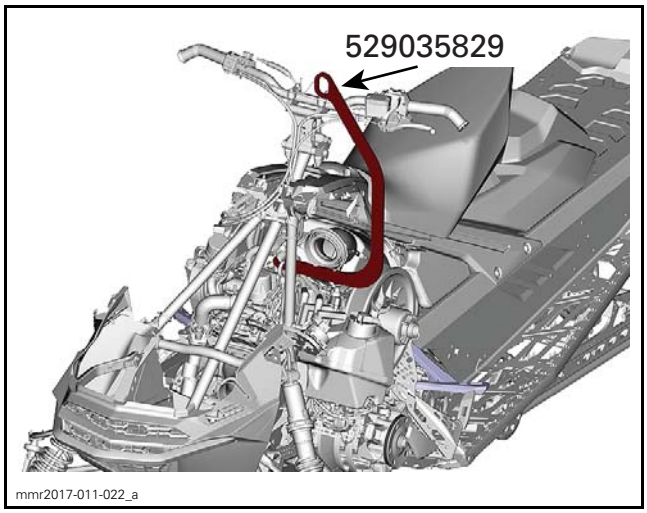

mmr2017-011-022_a

28. Remove the driven pulley. Refer to appropriate *DRIVEN PULLEY AND COUNTERSHAFT* subsection.

NOTE: If necessary, tap the upper gear retaining tool with a plastic hammer.

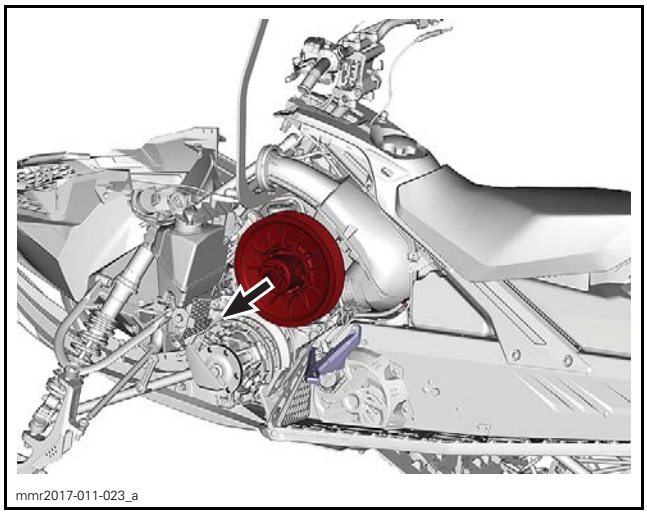
mmr2017-011-023_a

29. Unscrew countershaft from the upper gear retaining tool. **Do not** remove tool.

NOTE: While countershaft is removed from vehicle, the upper gear retaining tool maintains the drive chain and the upper gear in position inside chaincase.

30. On LH side, remove the steering brace.

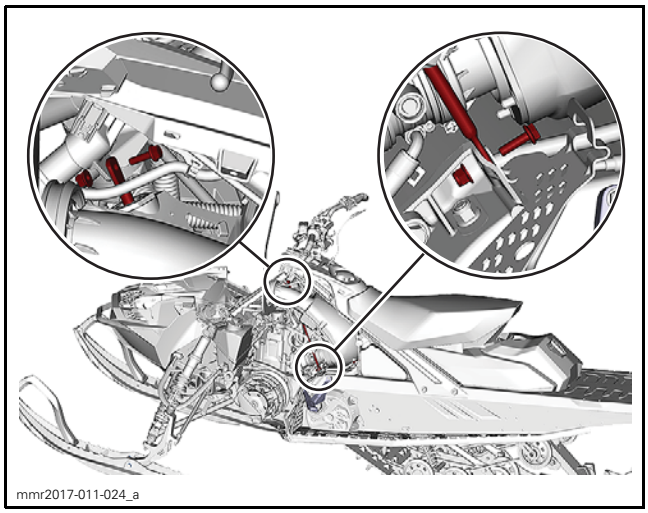
mmr2017-011-024_a

31. Remove the primary air silencer. Refer to *AIR INTAKE SYSTEM* subsection.

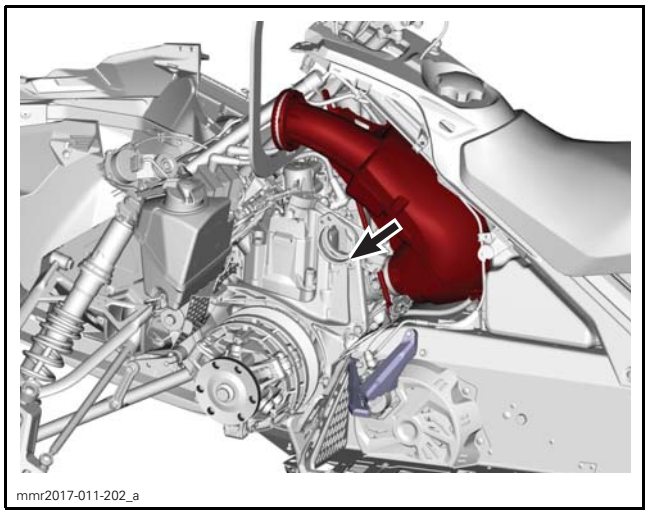
mmr2017-011-202_a

32. Remove engine support screws.

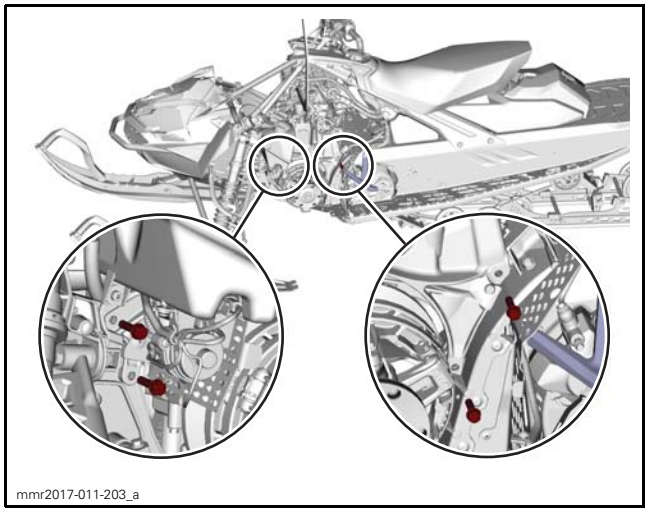
mmr2017-011-203_a

33. Lift engine and slide it out of vehicle.

Installing the Engine

The installation is the reverse of the removal procedure. However, pay attention to the following details.

Install **NEW** self-locking fasteners (screw or nut) where required. Refer to exploded views at the beginning of this subsection.

When installing countershaft bearing support, refer to *FRAME* subsection for proper procedure.

Install and tighten engine support bolts as per the following sequence.

TIGHTENING TORQUE	
Step 1 and Step 2	Install the bolt loosely
Step 3 and Step 4	31.5 N•m ± 3.5 N•m (23 lbf•ft ± 3 lbf•ft)
Step 5 and Step 6	24.5 N•m ± 3.5 N•m (18 lbf•ft ± 3 lbf•ft)

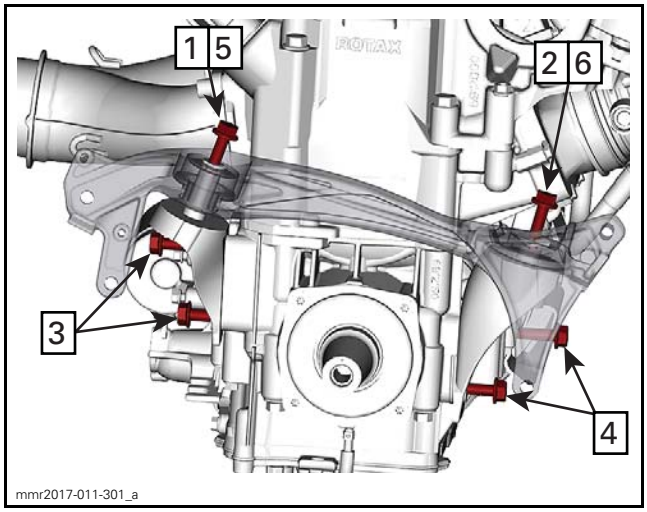

mmr2017-011-301_a

Secure the engine to the frame as per the following sequence.

NOTE: Snug all bolts then tighten to specification.

TIGHTENING TORQUE	
Step 1 to Step 4	33 N•m ± 3 N•m (24 lbf•ft ± 2 lbf•ft)
Step 5	24.5 N•m ± 3.5 N•m (18 lbf•ft ± 3 lbf•ft)

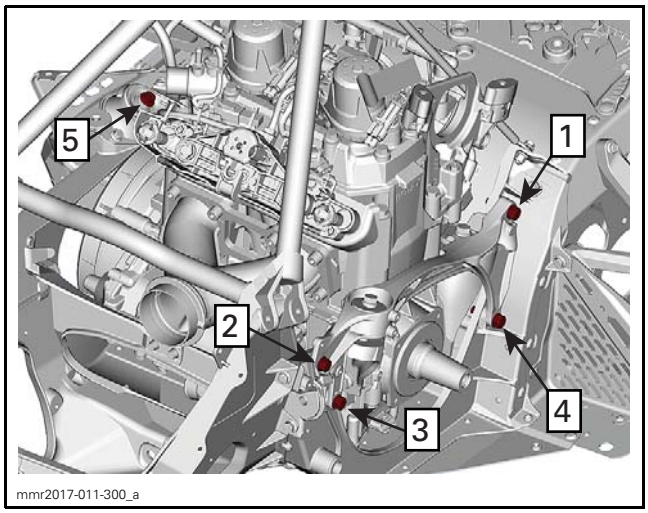

mmr2017-011-300_a

If a new engine is installed or the engine was repaired, restart the break-in procedure using BUDS2.

ENGINE SUPPORT

Inspecting the Engine Support

Check if engine supports are cracked, bent or damaged. Replace if necessary.

Replacing the PTO Side Engine Support

Remove the LH bottom pan. Refer to *BODY* subsection.

Remove driven pulley. Refer to appropriate *DRIVEN PULLEY AND COUNTERSHAFT* subsection.

Remove the injection oil tank support.

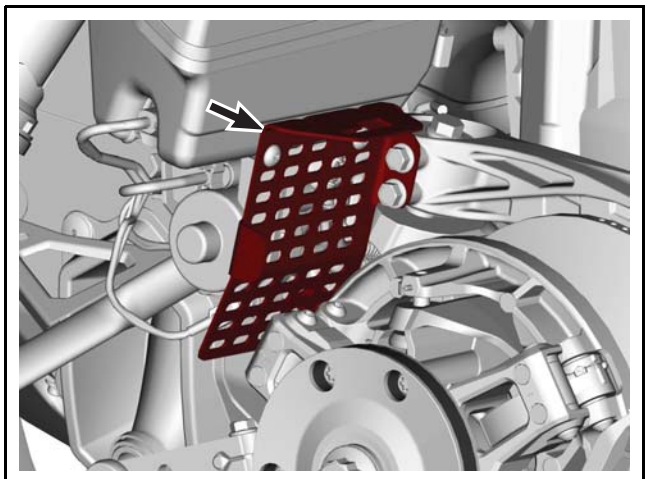
mmr2017-011-204_a

Place a piece of wood or any other appropriate tool under the engine to support it during engine support removal.

Remove screws securing engine support to rubber mount adapters.

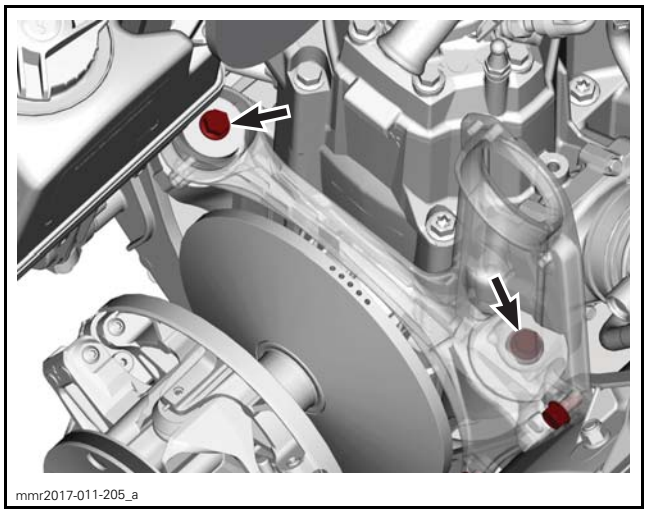
mmr2017-011-205_a

Remove engine support screws.

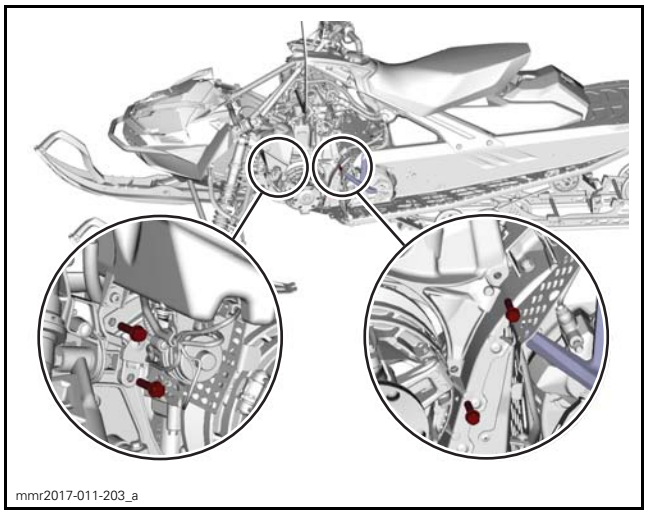
mmr2017-011-203_a

Remove engine support.

To install the engine support, reverse the removal procedure.

Tighten screws as per the specifications indicated in the exploded views.

Replacing the MAG Side Engine Support

Remove muffler and tuned pipe. Refer to *EXHAUST SYSTEM* subsection.

Place a piece of wood or any other appropriate tool under the engine to support it during engine support removal.

Remove screw securing engine support to rubber mount adapter.

Remove screw retaining engine support to engine.

Remove engine support.

To install the engine support, reverse the removal procedure.

Position the concave washer as shown.

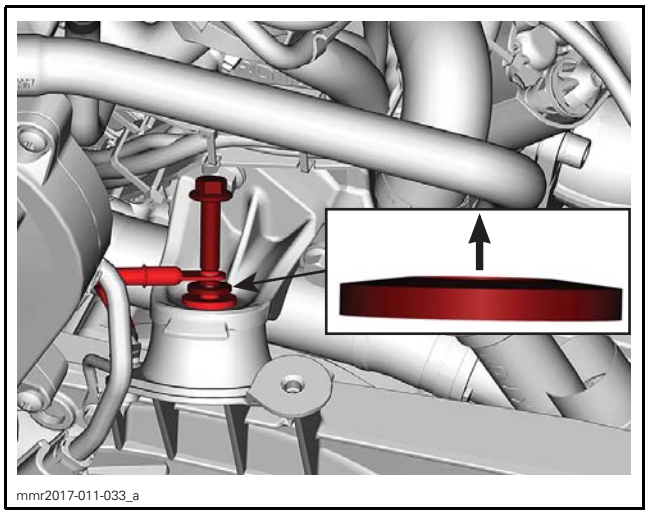

SOME PARTS REMOVED FOR CLARITY

Tighten screws as per the specifications indicated in the exploded views.

ENGINE RUBBER MOUNTS

Inspecting the Engine Rubber Mount

Check rubber mounts. Replace them if brittle, cracked or damaged.

Replacing the PTO Side Engine Rubber Mount

Remove the PTO side engine support. See procedure in this subsection.

Using a press, extract the engine rubber mount from the engine support.

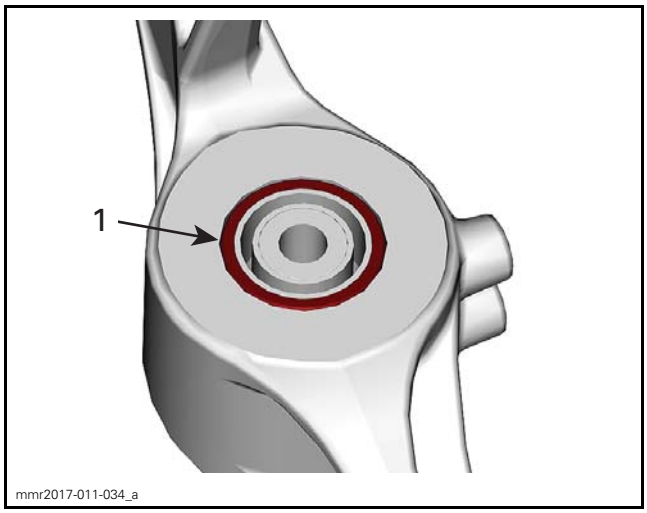

1. Press on this ring

Install the new engine rubber mount by pressing on the external metallic ring.

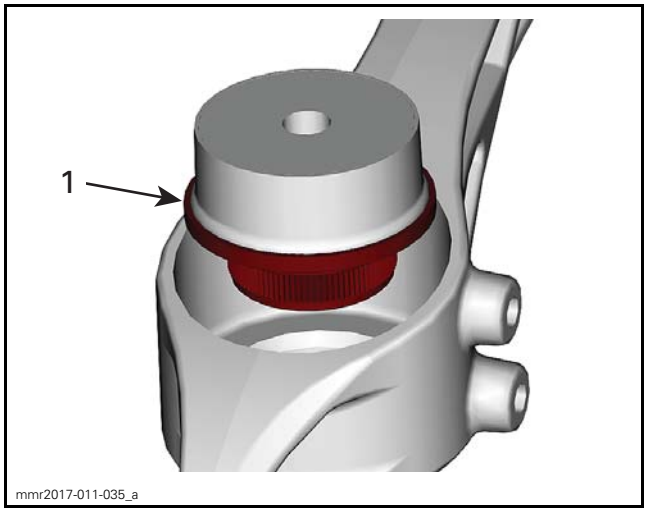

1. Press on this metallic ring

Replacing the MAG Side Engine Rubber Mount

Remove muffler and tuned pipe. Refer to *EXHAUST SYSTEM* subsection.

Place a piece of wood or any other appropriate tool under the engine to support it during engine support removal.

Remove screw securing engine support to rubber mount adapter.

Remove screw retaining rubber mount adapter to frame.

Remove rubber mount adapter.

To install the rubber mount adapter, reverse the removal procedure.

Tighten screws as per the specifications indicated in the exploded views.

AIR INTAKE SYSTEM (600R E-TEC AND 850 E-TEC)

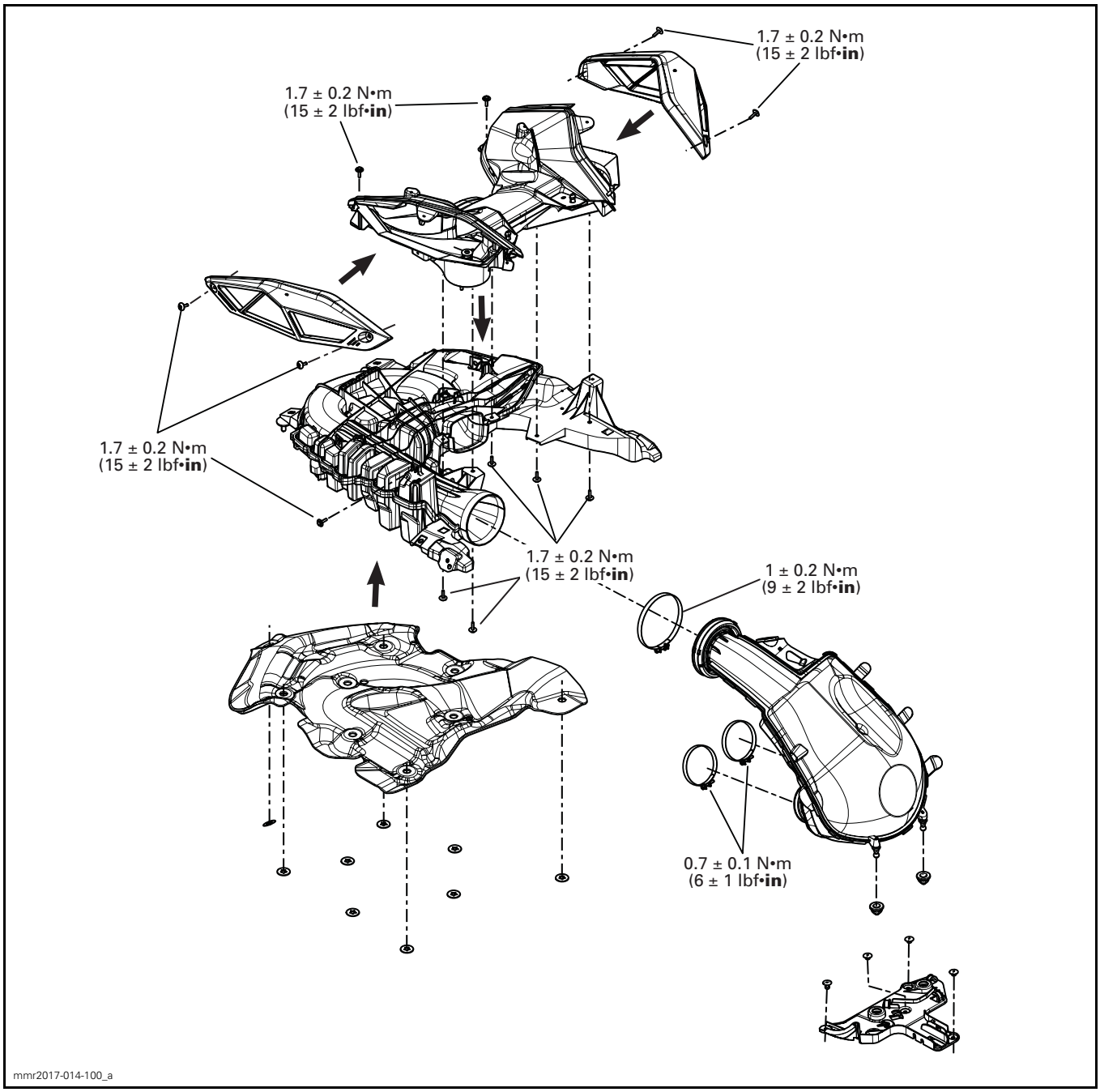

GENERAL

⚠ WARNING

Torque wrench tightening specifications must be strictly adhered to.
Locking devices must be replaced with a new ones when removed (e.g.: locking tabs, elastic stop nuts, cotter pins, etc.).

NOTICE Hoses, cables and locking ties removed during a procedure must be reinstalled as per factory standards.

PROCEDURES

AIR FILTER (MESH)

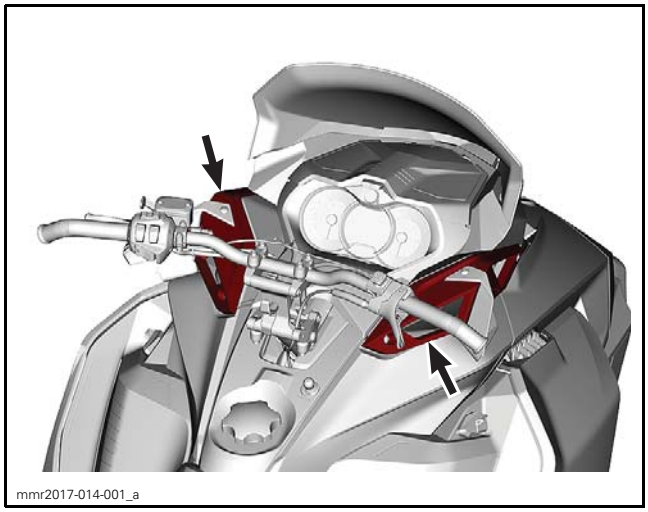

mmr2017-014-001_a

The same procedure applies for RH and LH side. Only one side is described in this procedure.

Removing the Air Filter

Remove screws from mesh filter housing.

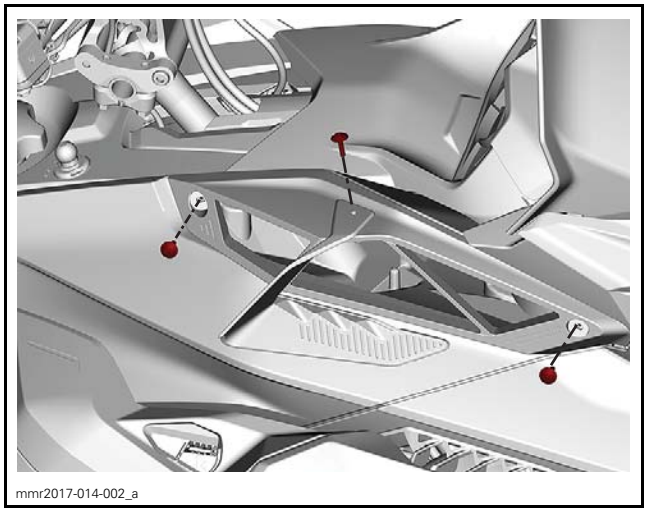

mmr2017-014-002_a

On some models, remove the air deflector.

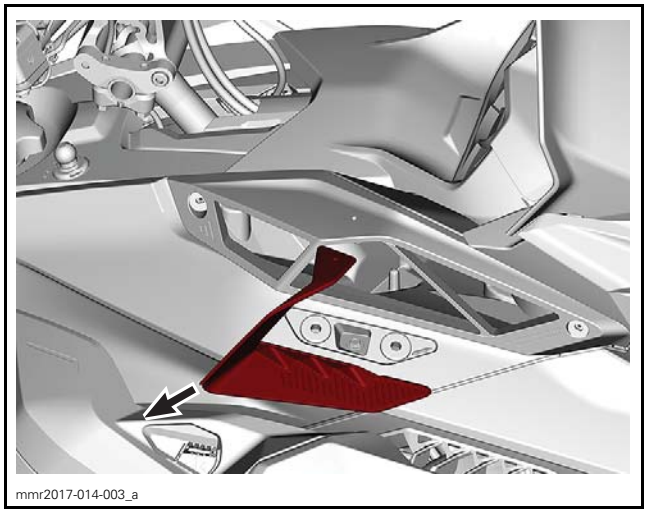

mmr2017-014-003_a

Remove the mesh filter housing from the upper body module.

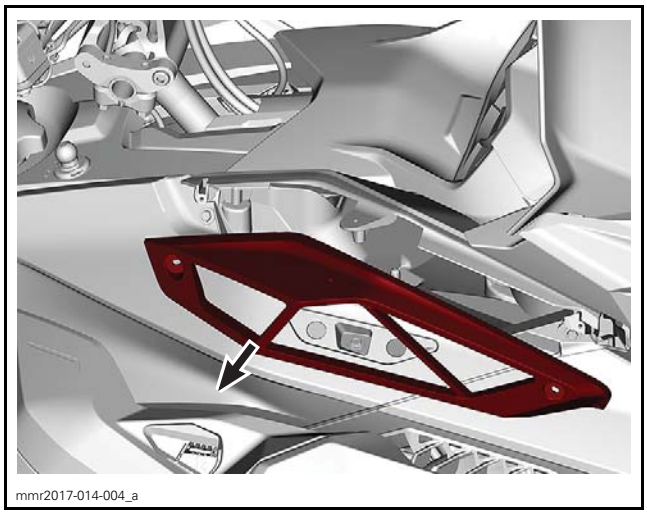

mmr2017-014-004_a

Cleaning the Air Filter

Clean with fresh water and mild soap.

Replace air filter if required.

NOTE: If the filter is very dirty, clean the interior of secondary air intake silencer at the same time.

Installing the Air Filter

The installation is the reverse of the removal procedure.

PRIMARY AIR INTAKE SILENCER

Removing the Primary Air Intake Silencer

1. Remove the following parts. If required, refer to *BODY* subsection.

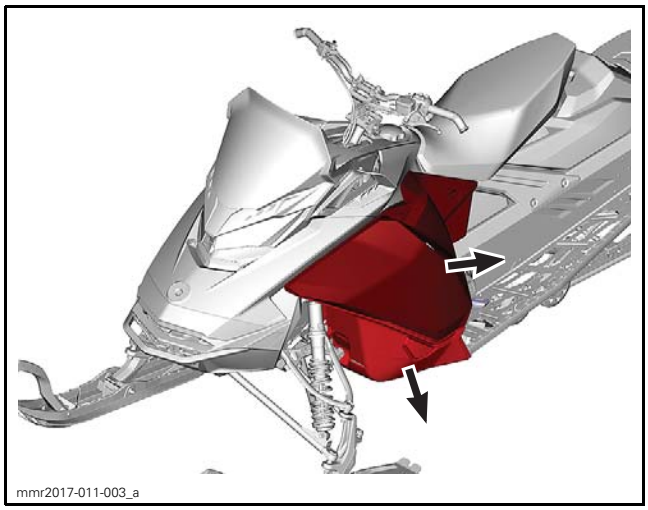

LH SIDE PANEL AND LH BOTTOM PAN

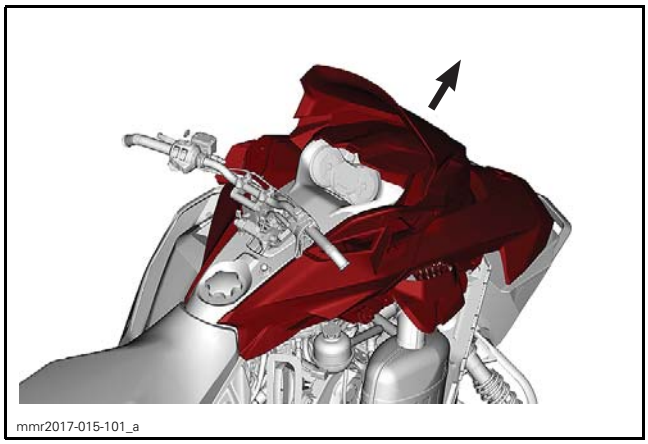

UPPER BODY MODULE

2. Remove the drive belt guard and acoustic panels.

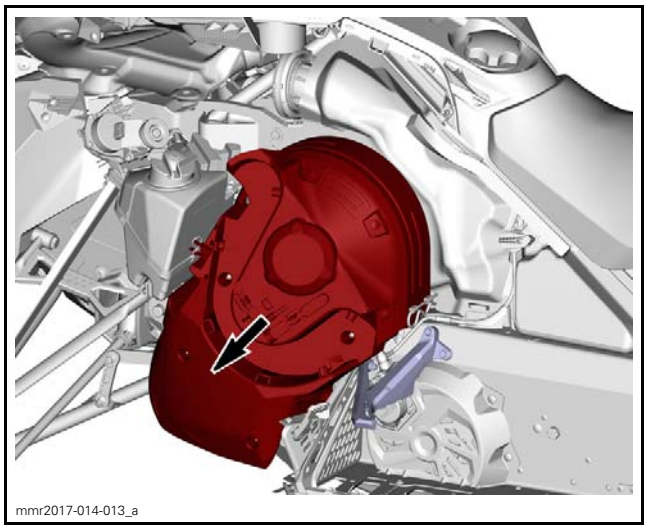

REMOVE DRIVE BELT GUARD

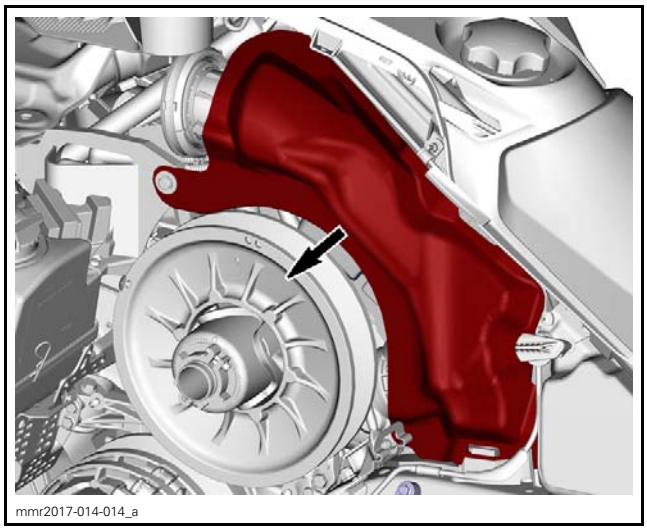

REMOVE ACOUSTIC PANEL

3. Remove the driven pulley. Refer to appropriate *DRIVEN PULLEY AND COUNTERSHAFT* subsection.

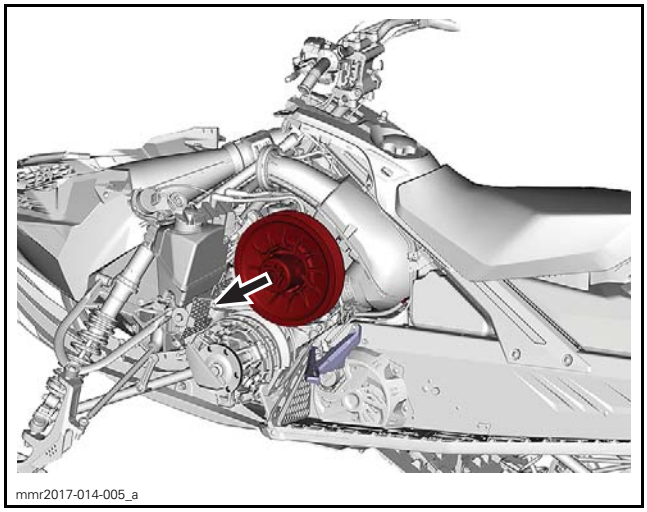

4. On LH side, remove the steering brace.

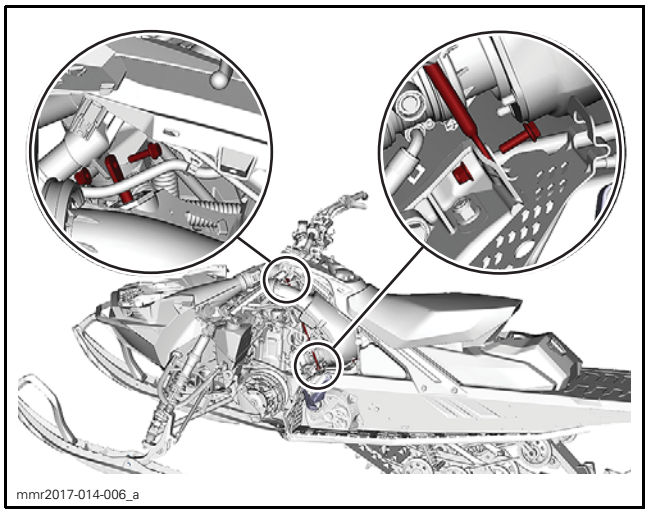
mmr2017-014-006_a

5. Remove the drive belt guard support.

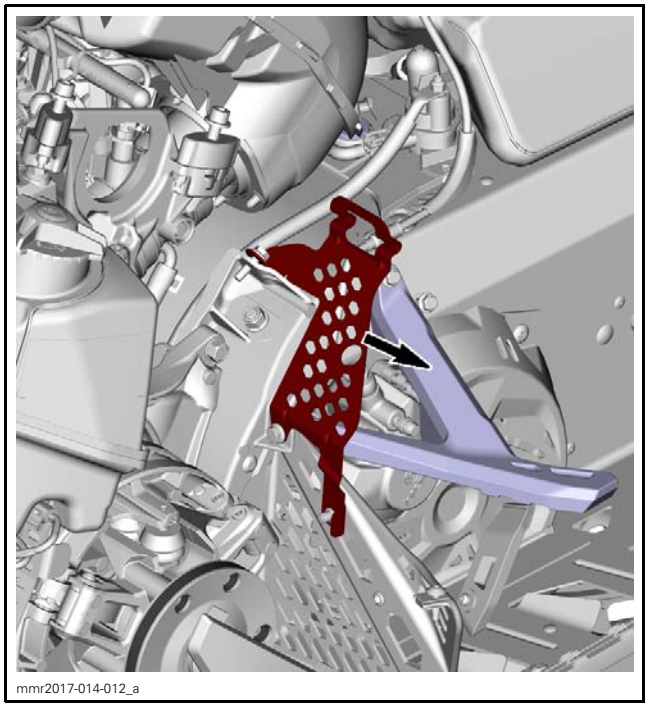
mmr2017-014-012_a

6. Unclip the fuel hose from the primary air silencer.

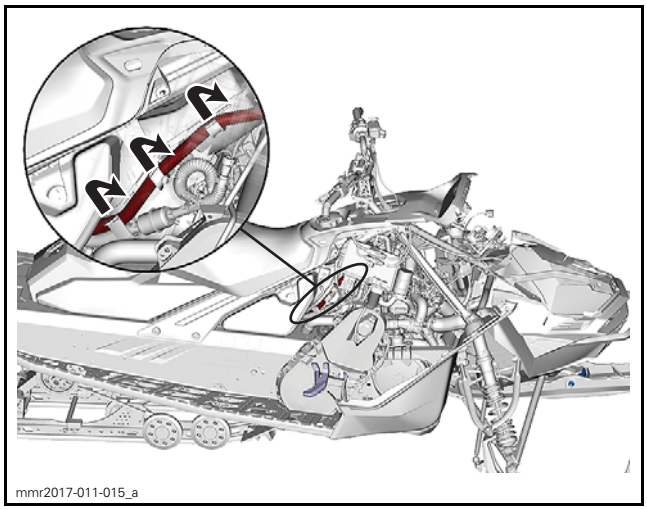
mmr2017-011-015_a

7. Remove the primary air silencer.
   7.1 Loosen clamps securing primary air silencer to intake adapters.
   7.2 Carefully pull out the primary air intake silencer with the steering brace.

NOTICE **Make sure not touching the secondary injectors or their harnesses when removing the primary air intake silencer .**

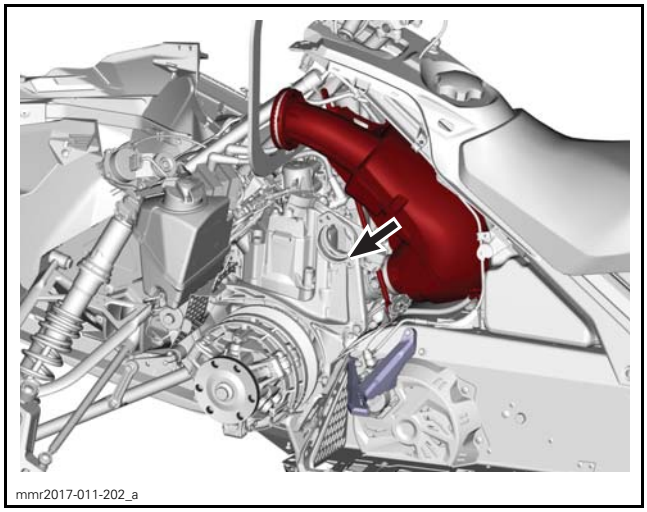
mmr2017-011-202_a

Installing the Primary Air Intake Silencer

The installation is the reverse of the removal procedure. However, pay attention to the following.

Make sure primary air intake is properly insert in the intake adapters before applying the tightening torque.

SECONDARY AIR INTAKE SILENCER

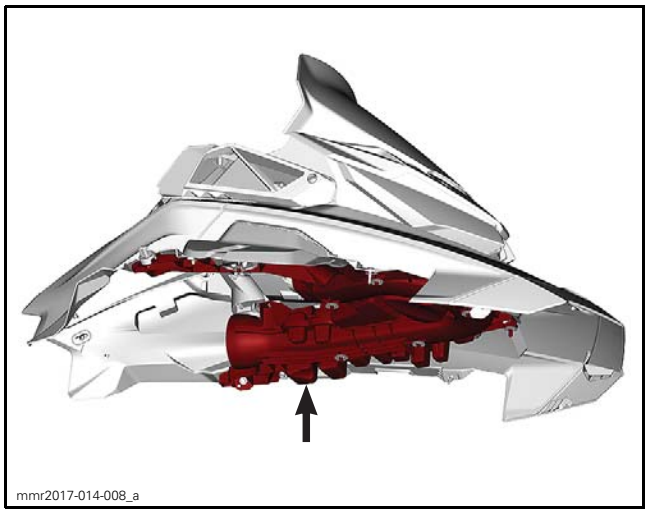
mmr2017-014-008_a

Removing the Secondary Air Intake Silencer

Referring to the *BODY* subsection, remove the upper body module.

Remove the following screws.

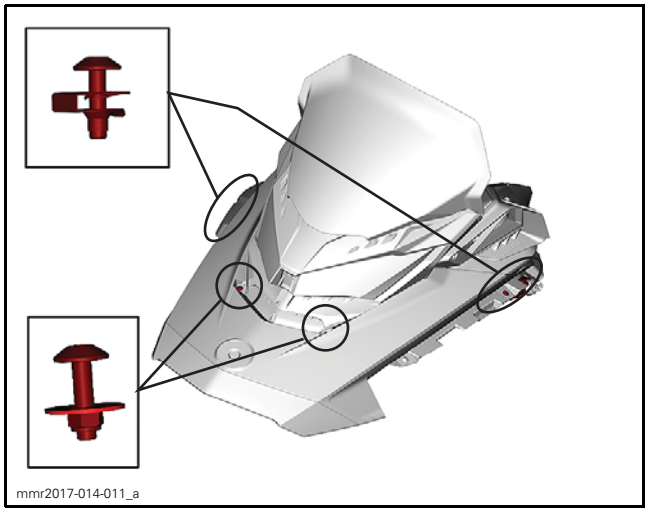
mmr2017-014-011_a

Turn the upper body module upside down and remove the soundproofing panel.

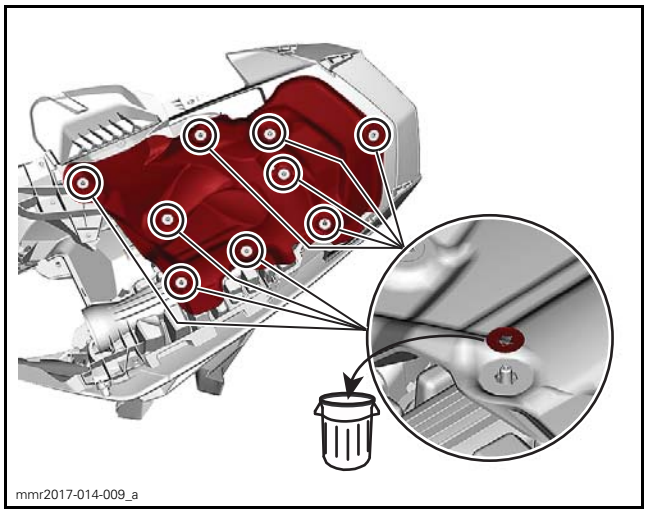
mmr2017-014-009_a

Remove fasteners retaining secondary air intake silencer to upper body module.

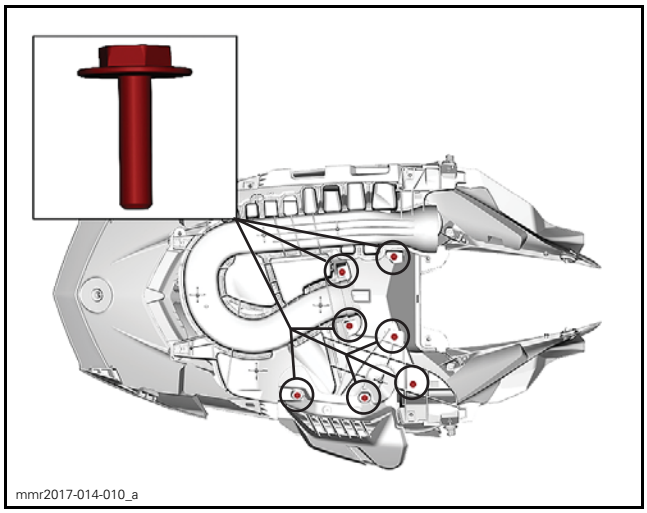
mmr2017-014-010_a

Installing the Secondary Air Intake Silencer

The installation is the reverse of the removal procedure.

AIR INTAKE SYSTEM (850 E-TEC TURBO)

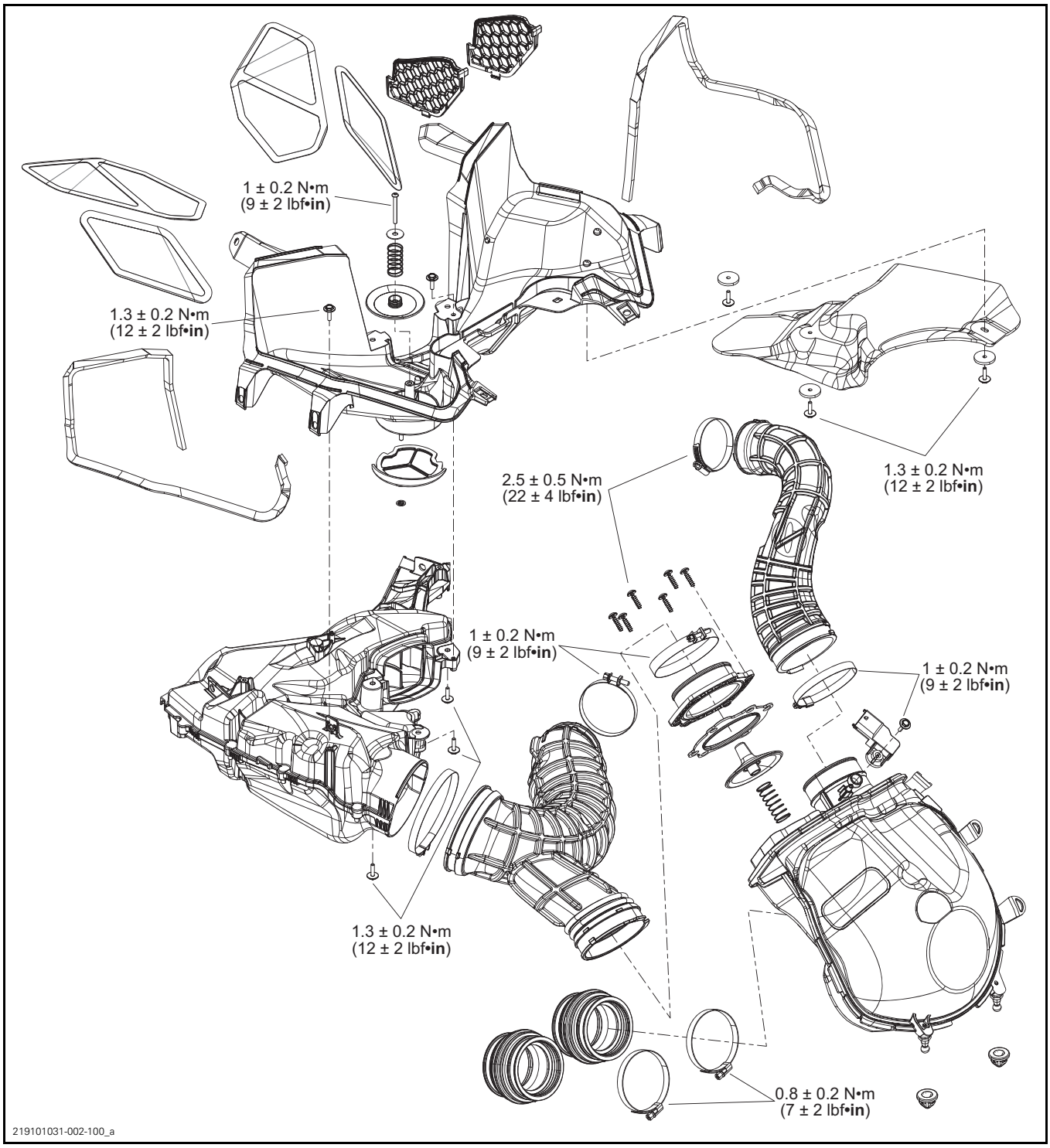

GENERAL

⚠ WARNING

Torque wrench tightening specifications must be strictly adhered to.
Locking devices must be replaced with a new ones when removed (e.g.: locking tabs, elastic stop nuts, cotter pins, etc.).

NOTICE Hoses, cables and locking ties removed during a procedure must be reinstalled as per factory standards.

PROCEDURES

AIR FILTER (MESH)

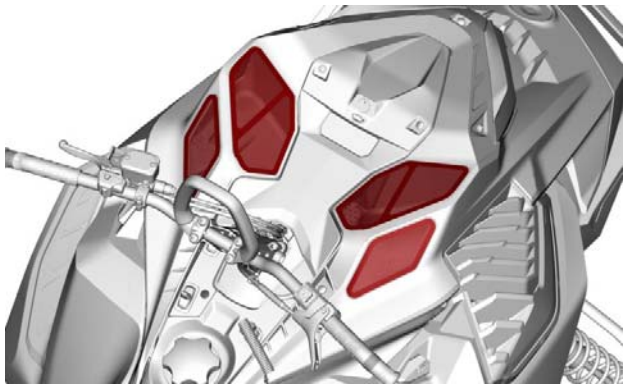

219101031-002-001

The same procedure applies for RH and LH side. Only one side is described in this procedure.

Replacing the Air Filter

Using a thin putty knife, unstick the air filter from the hood.

NOTE: It is easier to remove the air filter at room temperature than cold temperature.

NOTICE Do not overheat the hood.

Clean the hood surface using isopropyl alcohol.

219101031-002-002_a

TYPICAL

Install the new air filter with sticky side towards the hood.

Cleaning the Air Filter

Remove the secondary air intake silencer from the upper body module.

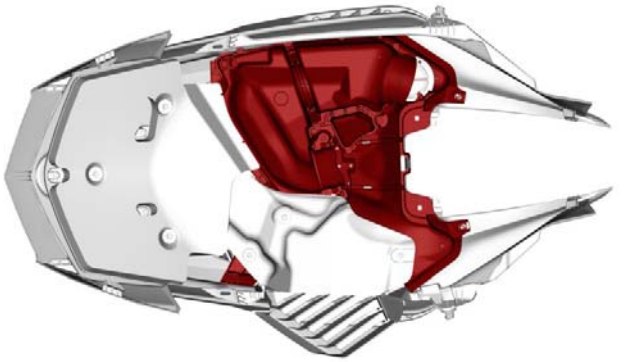

219101031-002-003

Clean with fresh water and mild soap.

Replace air filter if required.

NOTE: If the filter is very dirty, clean the interior of secondary air intake silencer at the same time.

PRIMARY AIR INTAKE SILENCER

Removing the Primary Air Intake Silencer

1. Remove the following parts.

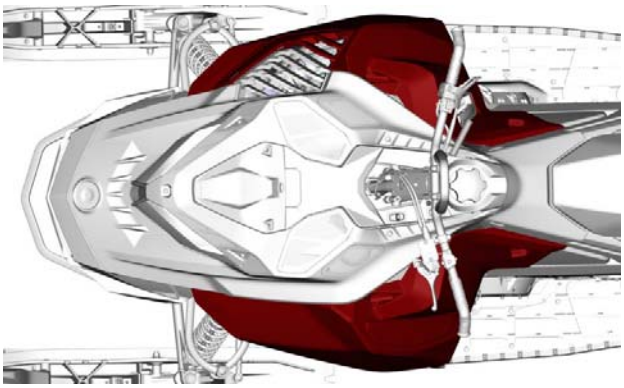
219101031-002-004

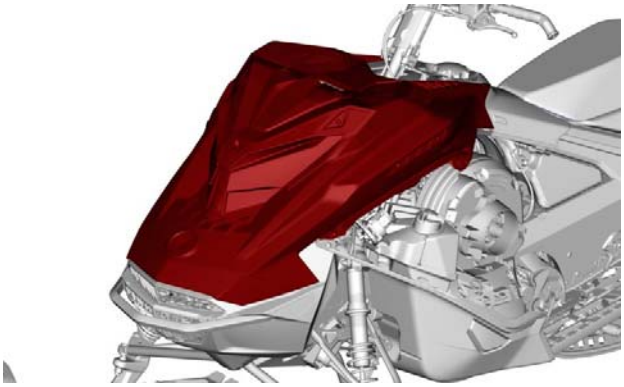
219101031-002-005

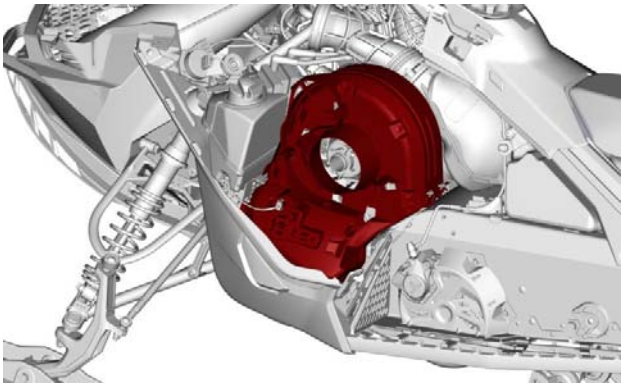
219101031-002-006

2. Remove the driven pulley. Refer to appropriate *DRIVEN PULLEY AND COUNTERSHAFT* subsection.

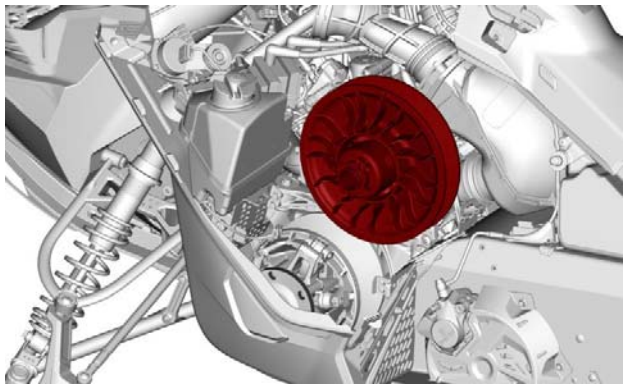
219101031-002-007

3. Remove the drive belt guard support.

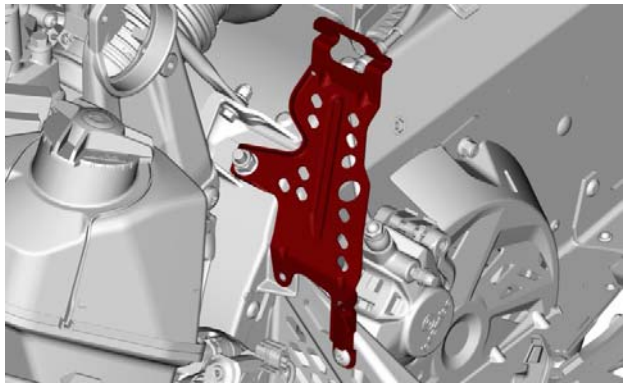
219101031-002-008

4. Remove the LH steering brace screws and nuts.

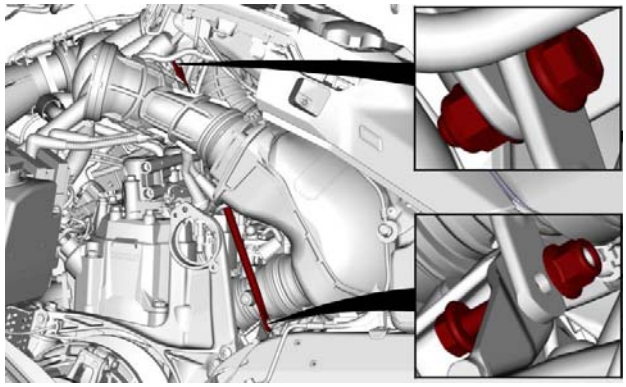
219101031-002-009

5. Disconnect the MAPTS connector.
6. Remove the rewind starter handle housing screw and move the housing aside.

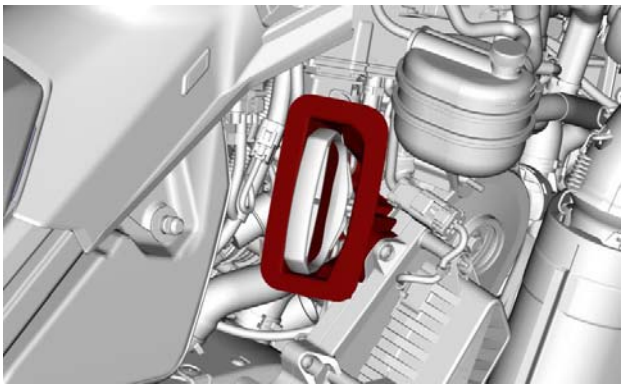
219101031-002-010

7. Cut locking ties and remove the fuel hoses from the primary air silencer tabs.

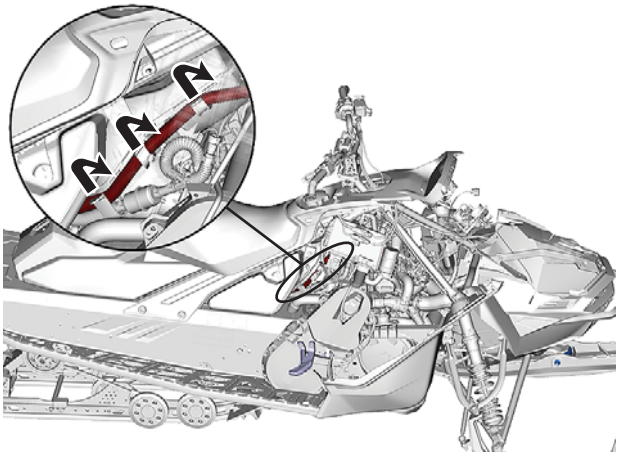
mmr2017-011-015_a

8. Remove the primary air silencer.
   8.1 Loosen clamps securing primary air silencer to intake hoses and adapters.
   8.2 Carefully pull out the primary air intake silencer with the steering brace.

NOTICE Make sure not touching the secondary injectors or their harnesses when removing the primary air intake silencer .

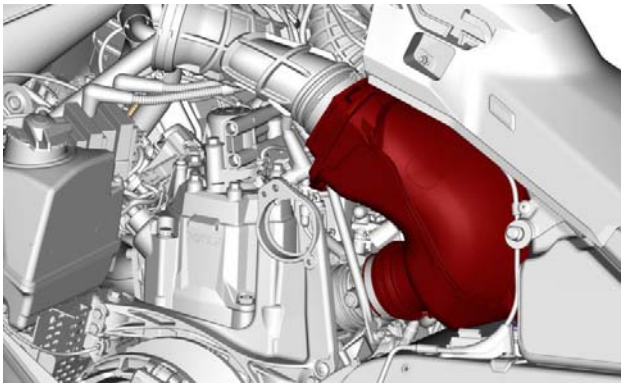
219101031-002-011

Installing the Primary Air Intake Silencer

The installation is the reverse of the removal procedure. However, pay attention to the following.

Make sure primary air intake is properly insert in the intake hoses and adapters before applying the tightening torque.

SECONDARY AIR INTAKE SILENCER

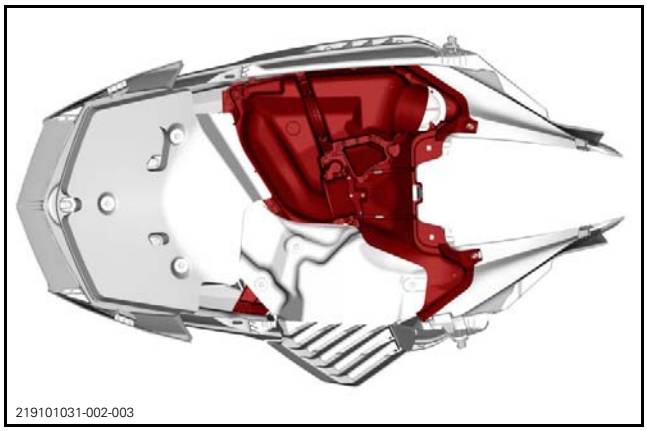
219101031-002-003

Removing the Secondary Air Intake Silencer

Referring to the *BODY* subsection, remove the upper body module.

Remove the following screws.

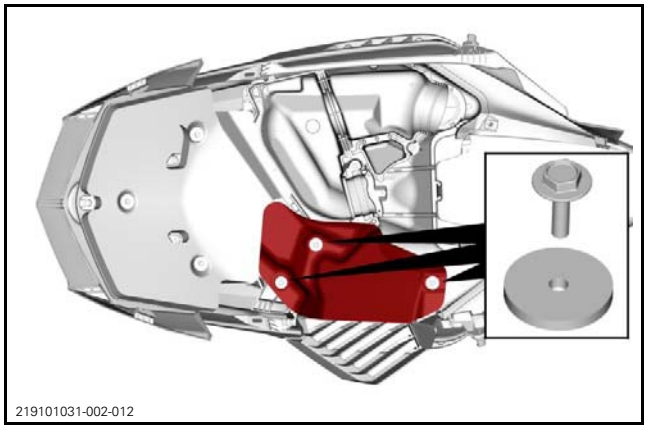
219101031-002-012

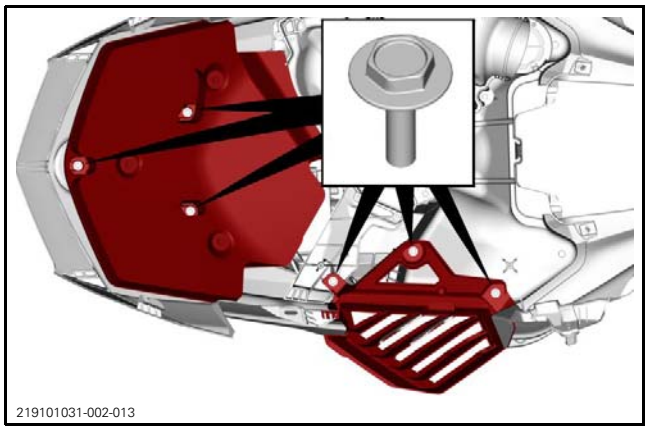
219101031-002-013

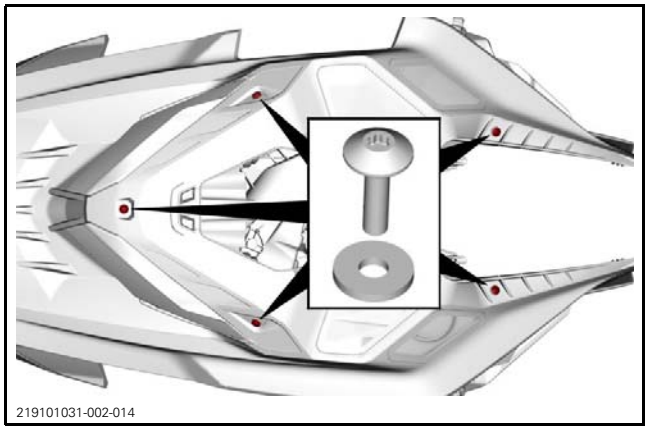
219101031-002-014

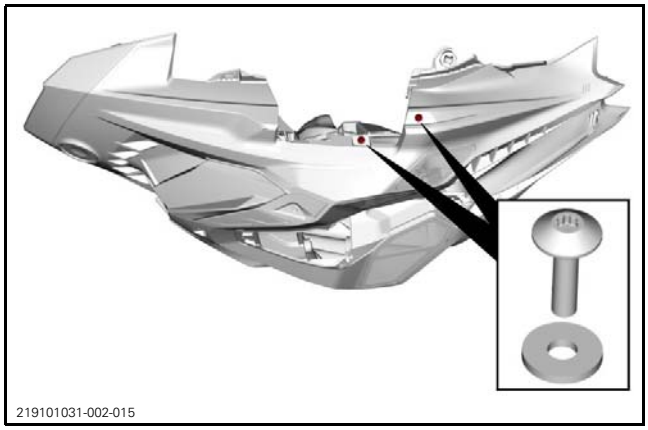
219101031-002-015

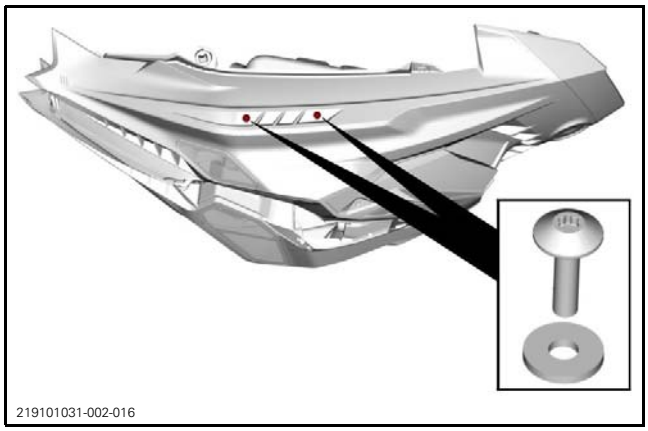
219101031-002-016

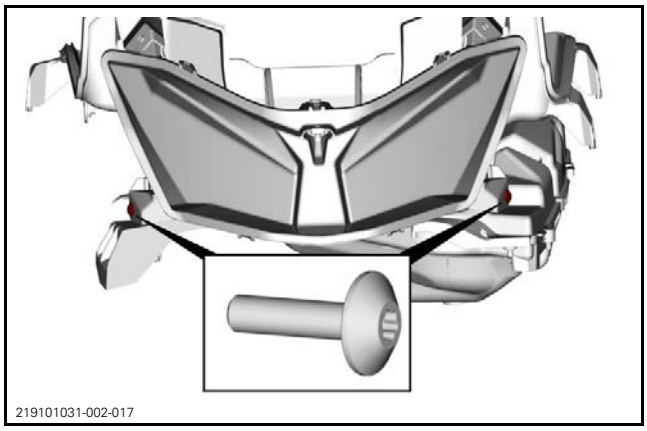
219101031-002-017

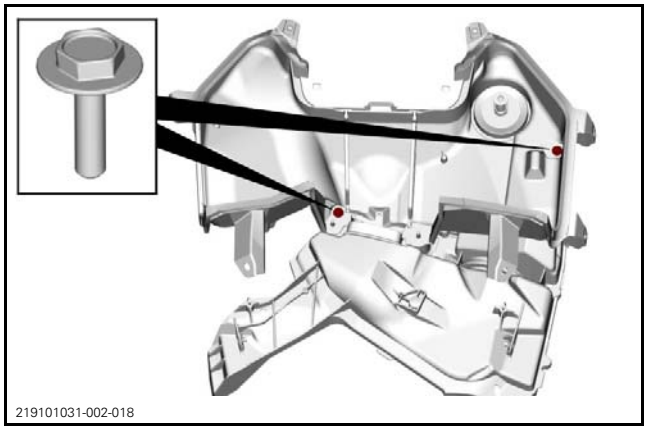
219101031-002-018

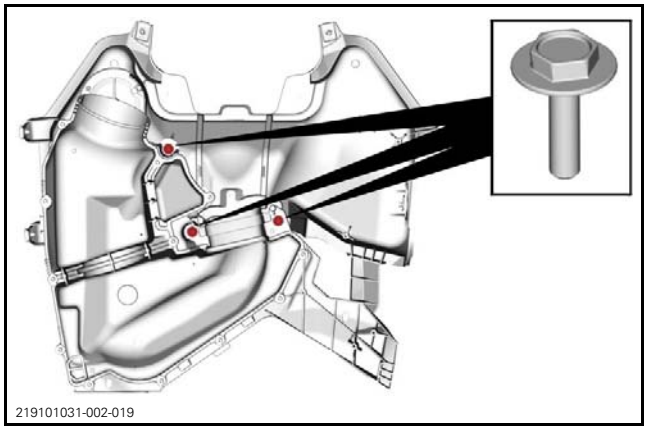
219101031-002-019

Installing the Secondary Air Intake Silencer

The installation is the reverse of the removal procedure. However, pay attention to the following.

Refer to the exploded view at the beginning of the subsection for proper tightening torque for the air intake silencers assembly.

Tighten Torx screws to specification.

TIGHTENING TORQUE	
M5 Torx screw on panel nut	1.8 N•m ± 0.2 N•m (16 lbf•**in** ± 2 lbf•**in**)

EXHAUST SYSTEM (600R E-TEC AND 850 E-TEC)

SERVICE TOOLS

Description	Part Number	Page
SPRING INSTALLER/REMOVER	529 035 983	37, 42

Models With One Exhaust Gas Temperature Sensor (EGTS)

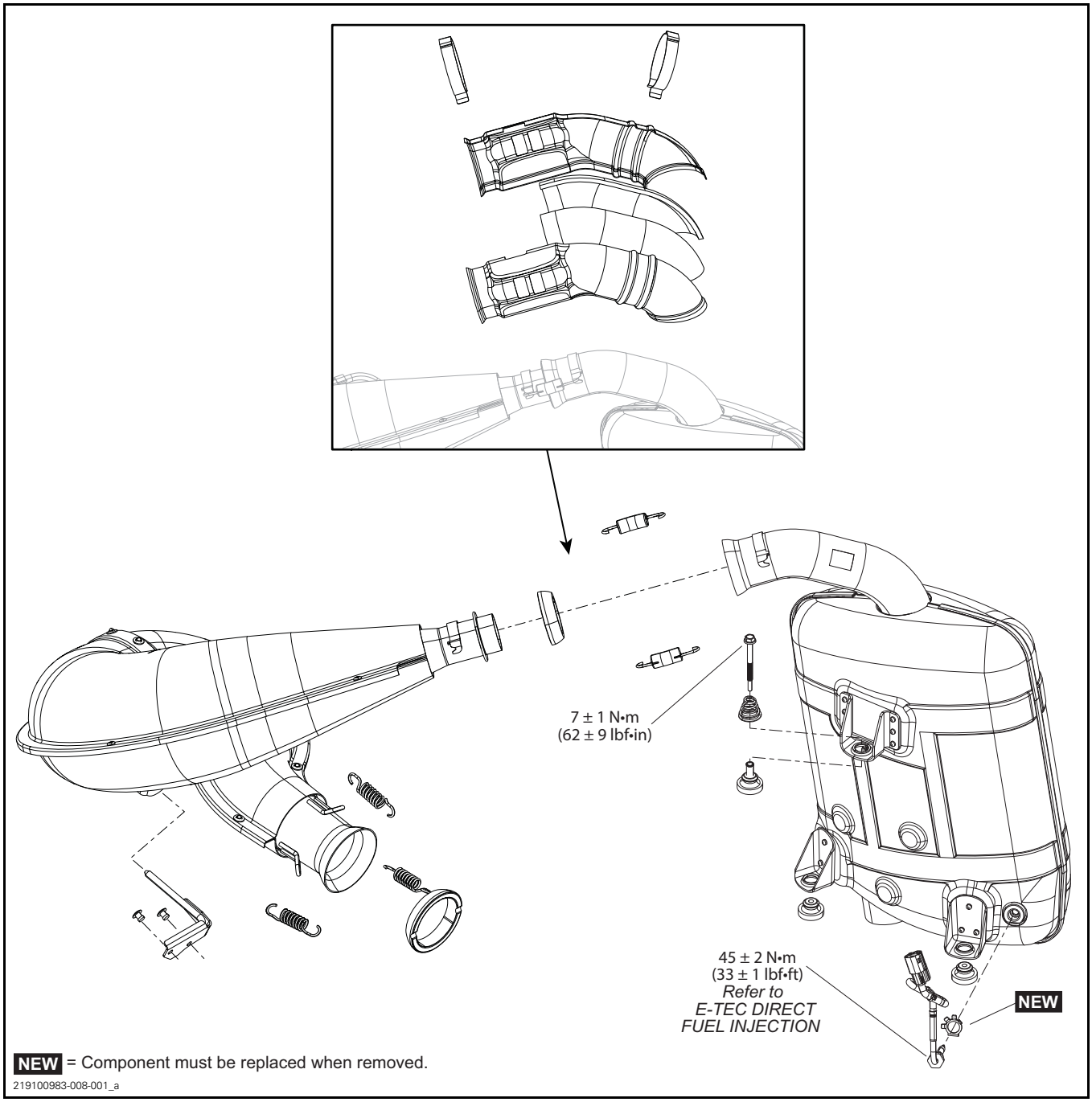

Models With Two Exhaust Gas Temperature Sensors (EGTS)

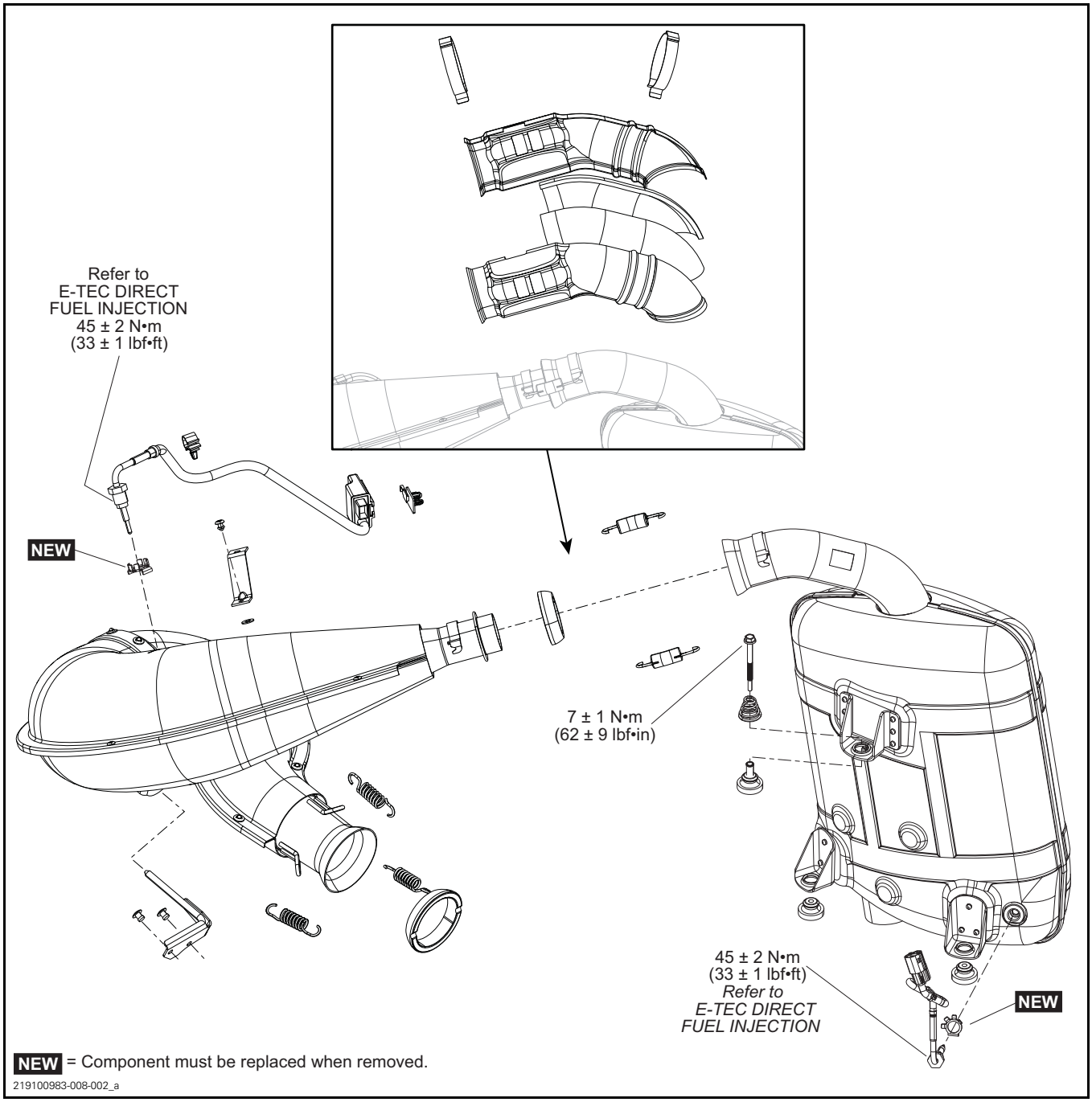

GENERAL

⚠ WARNING

To avoid potential burns, never touch exhaust system components immediately after the engine has been running because these components are very hot. Let engine and exhaust system cool down before performing any servicing.

During assembly/installation, use the torque value and service products as in the exploded view.

⚠ WARNING

Torque wrench tightening specifications must be strictly adhered to.
Locking devices (e.g.: locking tabs, elastic stop nuts, self-locking fasteners, cotter pins, etc.) must be replaced with new ones.

MAINTENANCE

INSPECTING THE EXHAUST SYSTEM

Check the following components for leaks, cracks, or other damages:
- Springs and retainers
- Exhaust system mounts
- Muffler
- Tuned pipe
- Donut gaskets
- Shields
- Manifold.

PROCEDURES

MUFFLER

Removing the Muffler

1. Refer to *BODY* subsection and remove the following parts.

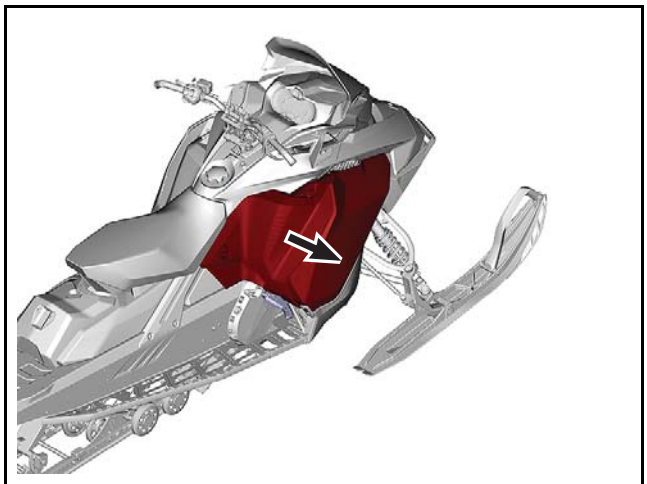
mmr2017-015-100_a

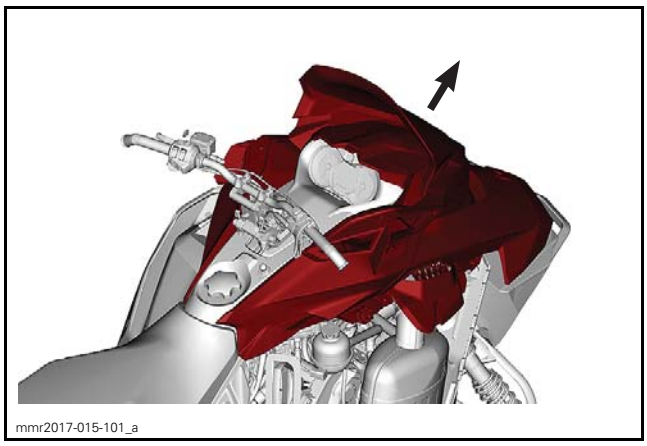
mmr2017-015-101_a

2. Remove heat shields from the muffler pipe.

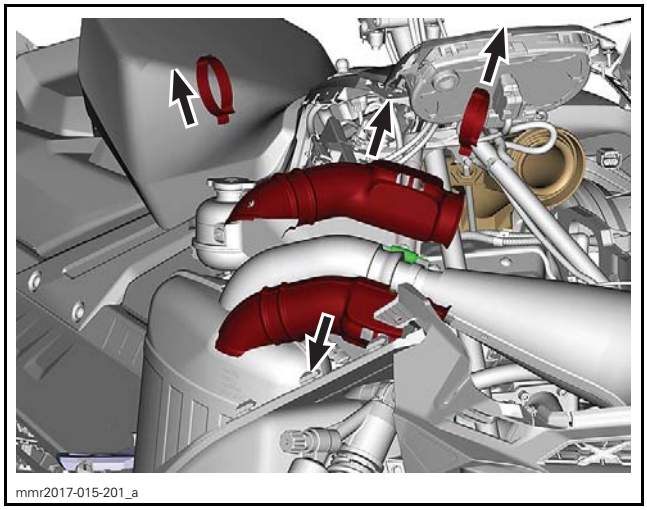
mmr2017-015-201_a

3. Remove exhaust springs retaining the tuned pipe to the muffler.

REQUIRED TOOL
SPRING INSTALLER/REMOVER (P/N 529 035 983)

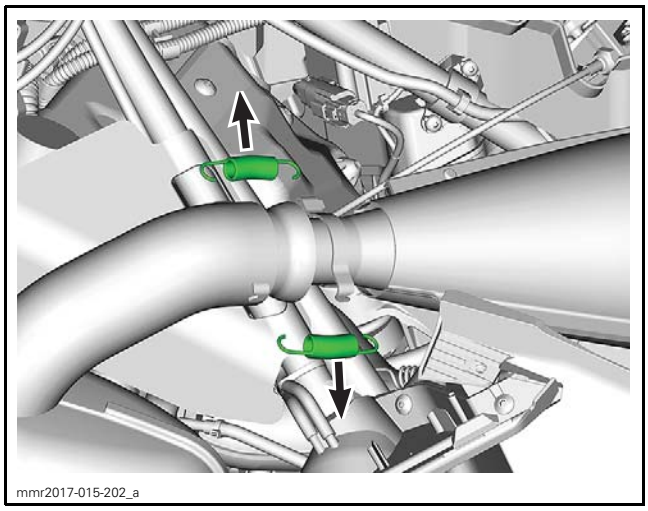
mmr2017-015-202_a

4. Disconnect the power harness from the muffler EGTS.

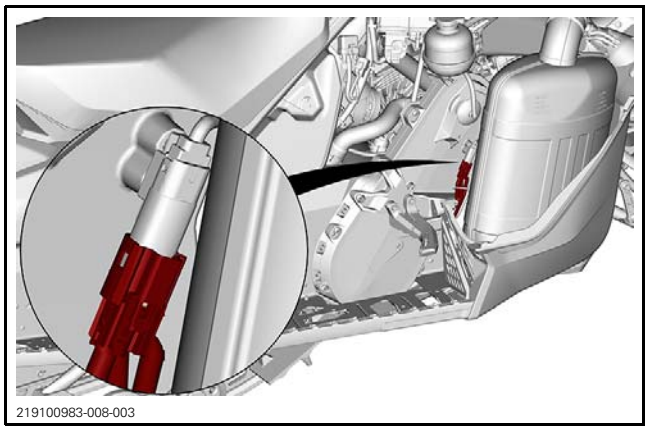
219100983-008-003

5. Behind the muffler, remove the retaining screw and its spring.

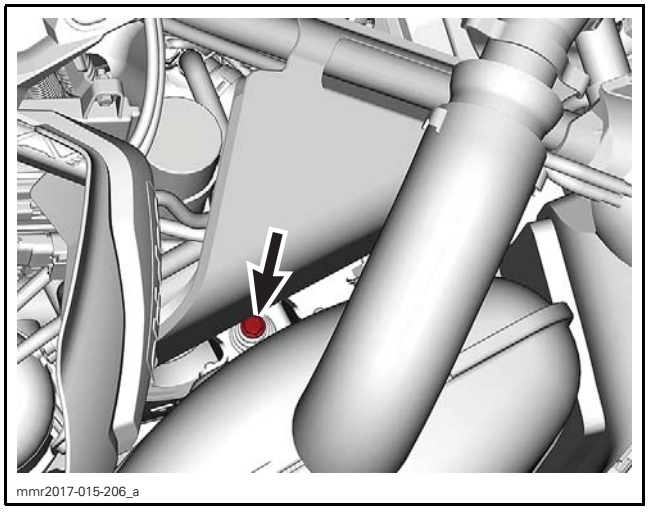
mmr2017-015-206_a

6. Remove the muffler.

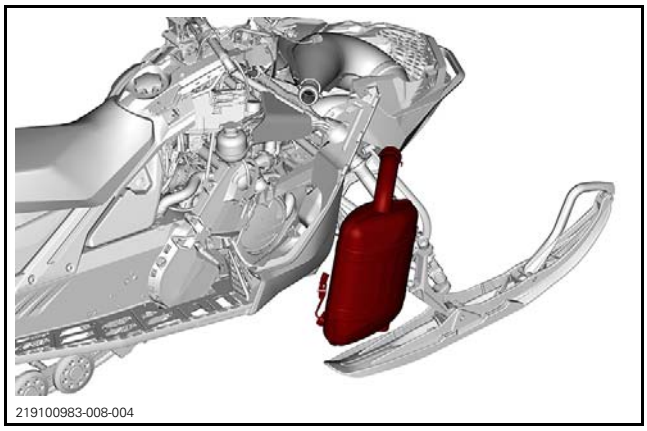
219100983-008-004

7. Remove exhaust gasket.

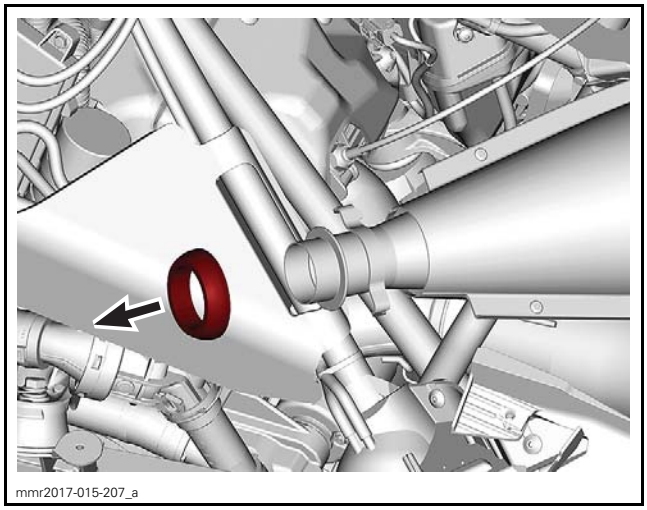
mmr2017-015-207_a

Inspecting the Muffler

Check the muffler for cracks or other damages.

Check grommet condition.

Inspect exhaust gasket condition. Replace as required.

Installing the Muffler

The installation is the reverse of the removal procedure. However, pay attention to the following.

Muffler Retaining Screw

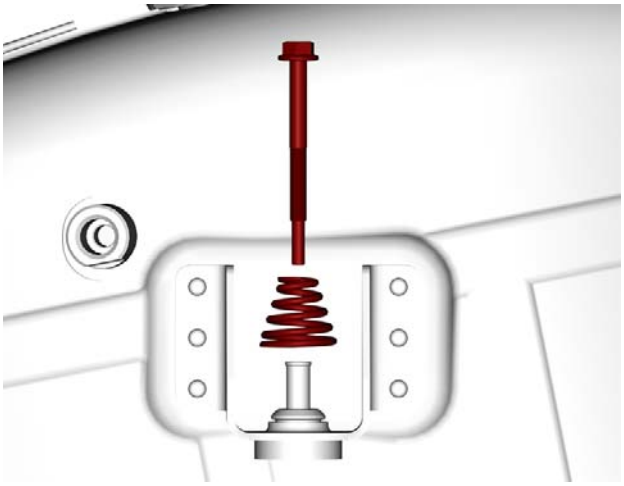
mmr2017-015-700

TIGHTENING TORQUE	
Muffler retaining screw	7 N•m ± 1 N•m (62 lbf•**in** ± 9 lbf•**in**)

Replacing the Muffler Shell

1. Remove muffler.
2. Place muffler flat on a work bench.
3. Using a pair of adjustable channel lock pliers, unfold the deflectors lip/edges all around the muffler perimeter as depicted below.


mbs2019-008_004

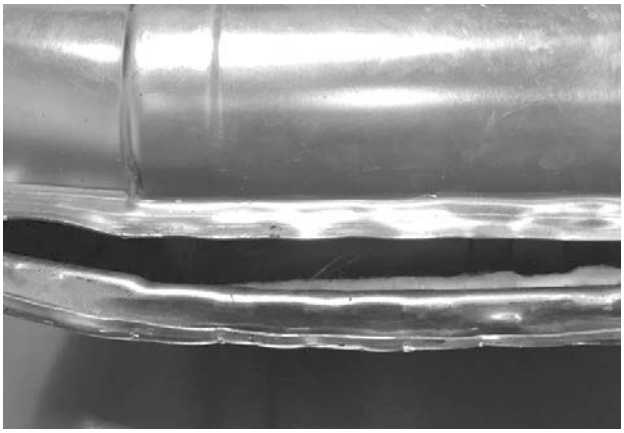
mbs2019-008_009

4. Remove and discard the two deflectors, keeping both insulating wool for reuse.

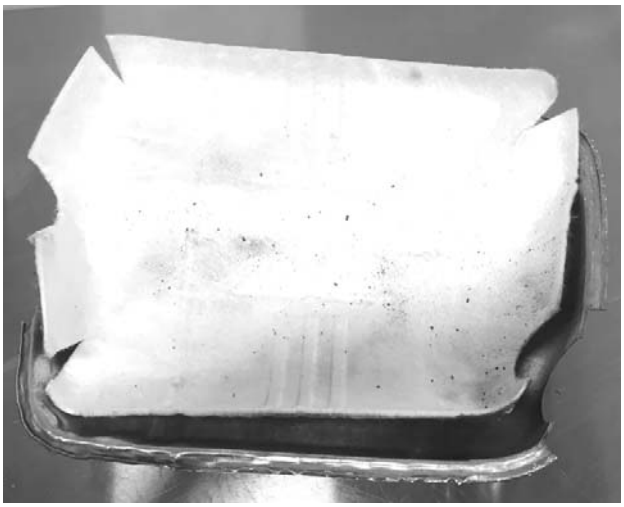
mbs2019-008_010

5. Using a 5 mm (3/16 in) drill bit, drill the rivets that hold the three brackets. Keep all three brackets for reuse.

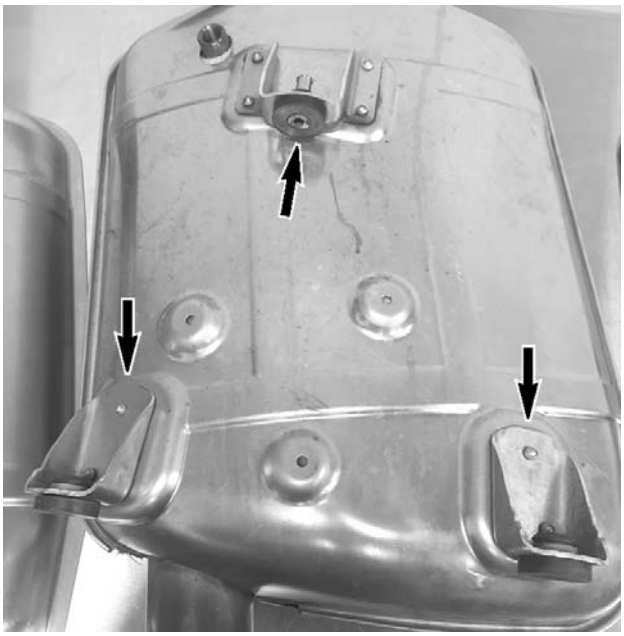
mbs2019-008_012

3 brackets


mbs2019-008_011

6. Put a clean rag on your work bench for protection, reinstall all three brackets on LH deflector using new rivets.


mbs2019-008_030

Upper center bracket


mbs2019-008_031

Lower bracket

7. Place the new LH deflector face down and insert insulating wool previously removed.


mbs2019-008_018

8. Place muffler into LH deflector.


mbs2019-008_019

9. Place insulating wool previously removed onto muffler and install the new RH deflector.


mbs2019-008_020

10. Start by folding the RH deflector edge onto LH deflector edge at an approximate 60° angle using a nylon head hammer all around the muffler perimeter.


mbs2019-008_022

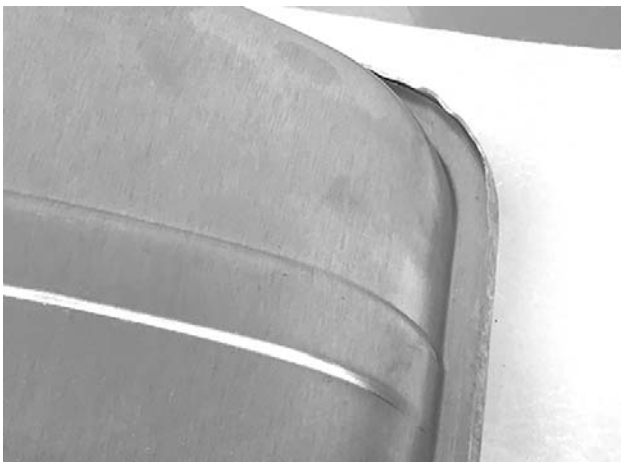
mbs2019-008_024

11. Using a pair of flat nose pliers, fold down flat and squeeze tight the RH deflector edge onto LH deflector edge all around the muffler perimeter.

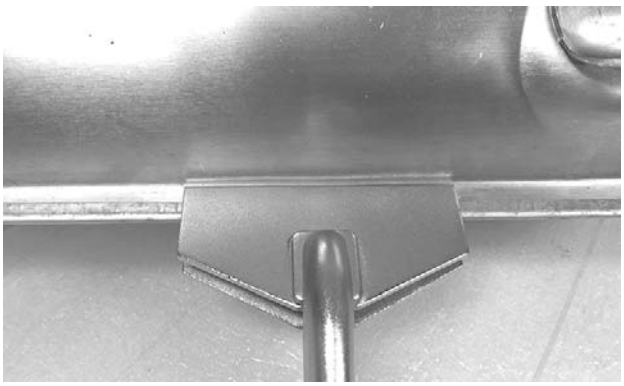
mbs2019-008_026

12. Using a cloth type protective tape, put a few layers of tape around deflectors edge for protection.


mbs2019-008_027

13. Using a steel head hammer, fold up deflector edges up against LH deflector sides, after working around the muffler perimeter, remove the protective tape.


mbs2019-008_028

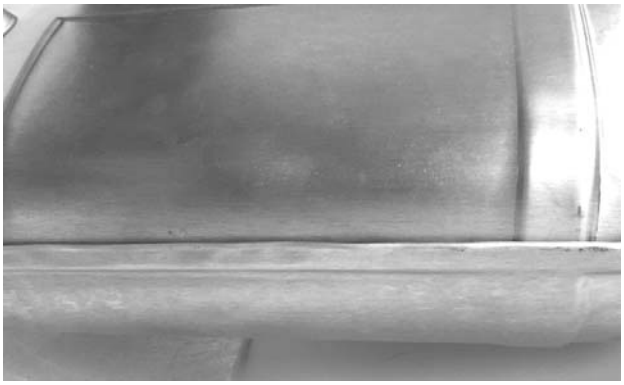
mbs2019-008_029

14. Reinstall muffler.

TUNED PIPE

Removing the Tuned Pipe

1. Remove the muffler.
2. Remove exhaust springs retaining the tuned pipe to the exhaust manifold.

REQUIRED TOOL
SPRING INSTALLER/REMOVER (P/N 529 035 983)

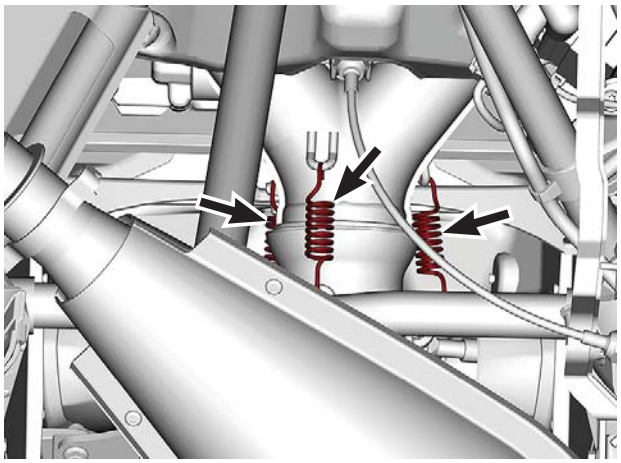
mmr2017-015-208_a

Models With 2 EGTS

3. Disconnect the THCM harness from the THCM module.

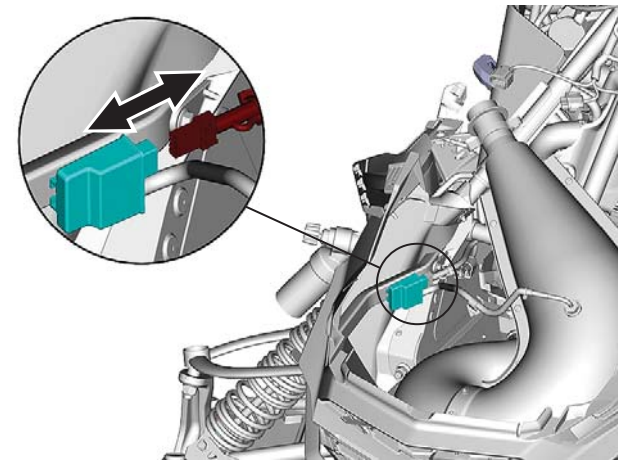
mmr2017-015-209_a

4. Detach the THCM from the vehicle side member.

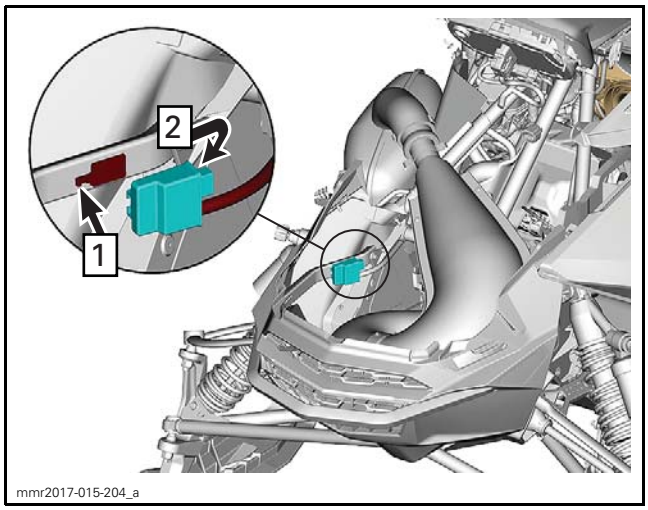

All Models

5. Remove tuned pipe.
   5.1 Move tuned pipe forwards until the hook gets out of the anti vibration rubber mount.
   5.2 Remove the tuned pipe by tilting it (engine side).

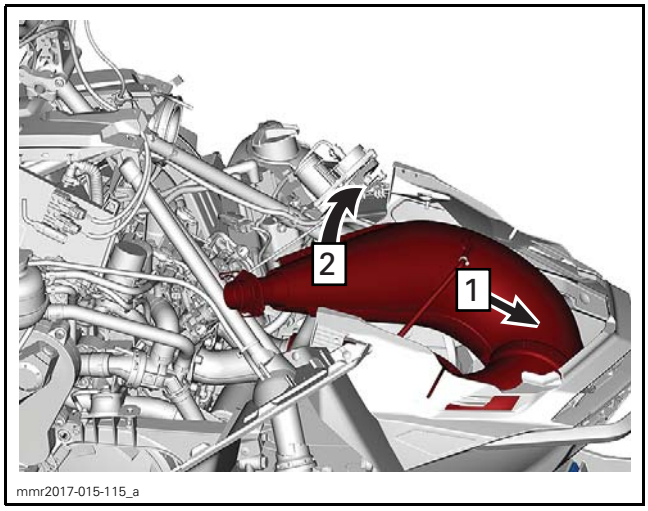

6. Remove exhaust gasket.

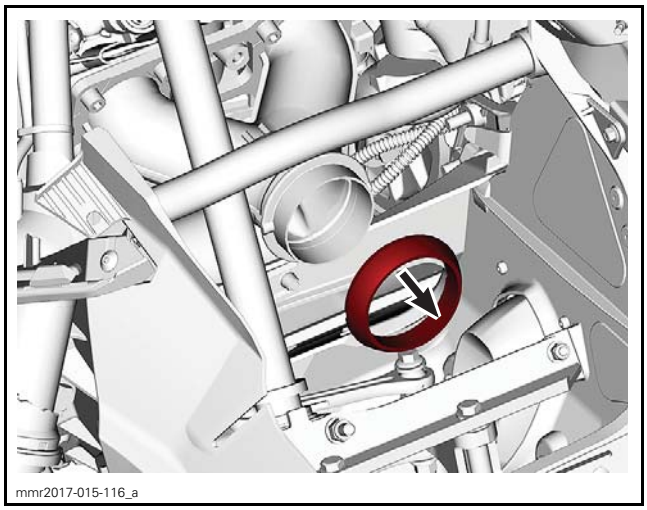

Inspecting the Tuned Pipe

Check exhaust pipe for:

– Damages
– Cracks.

Inspect exhaust gasket condition. Replace as required.

Installing the Tuned Pipe

The installation is the reverse of the removal procedure.

EXHAUST GAS TEMPERATURE SENSOR (EGTS)

Removing the EGTS

Unfold all tabs.

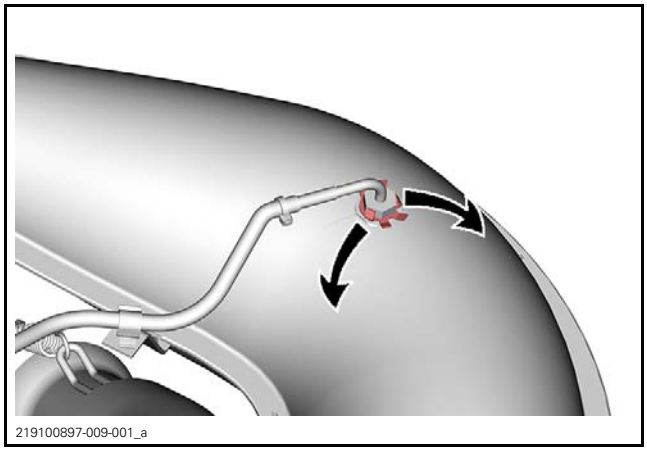

TYPICAL

Remove sensor.

Installing the EGTS

The installation is the reverse of the removal procedure. However, pay attention to the following.

Install a new locking tab as shown and tighten sensor to specification.

On the tuned pipe, fold two (2) tabs on sensor.

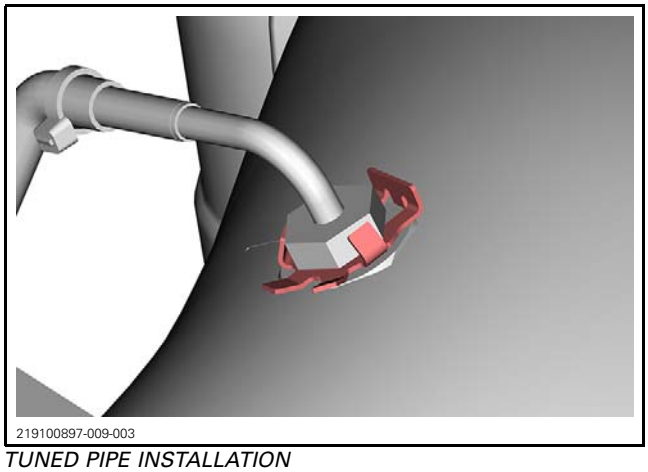

TUNED PIPE INSTALLATION

On the muffler, fold one (1) tab on sensor.

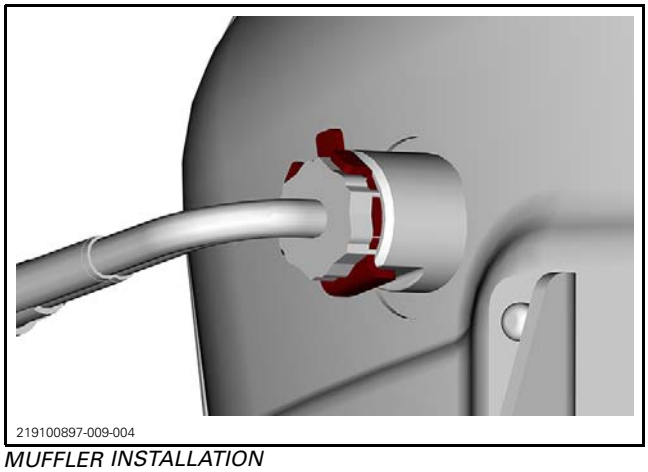

MUFFLER INSTALLATION

TIGHTENING TORQUE	
Exhaust Gas Temperature Sensor	45 N•m ± 2 N•m (33 lbf•ft ± 1 lbf•ft)

EXHAUST SYSTEM (850 E-TEC TURBO)

SERVICE TOOLS

Description	Part Number	Page
SPRING INSTALLER/REMOVER	529 035 983	47–49

MUFFLER

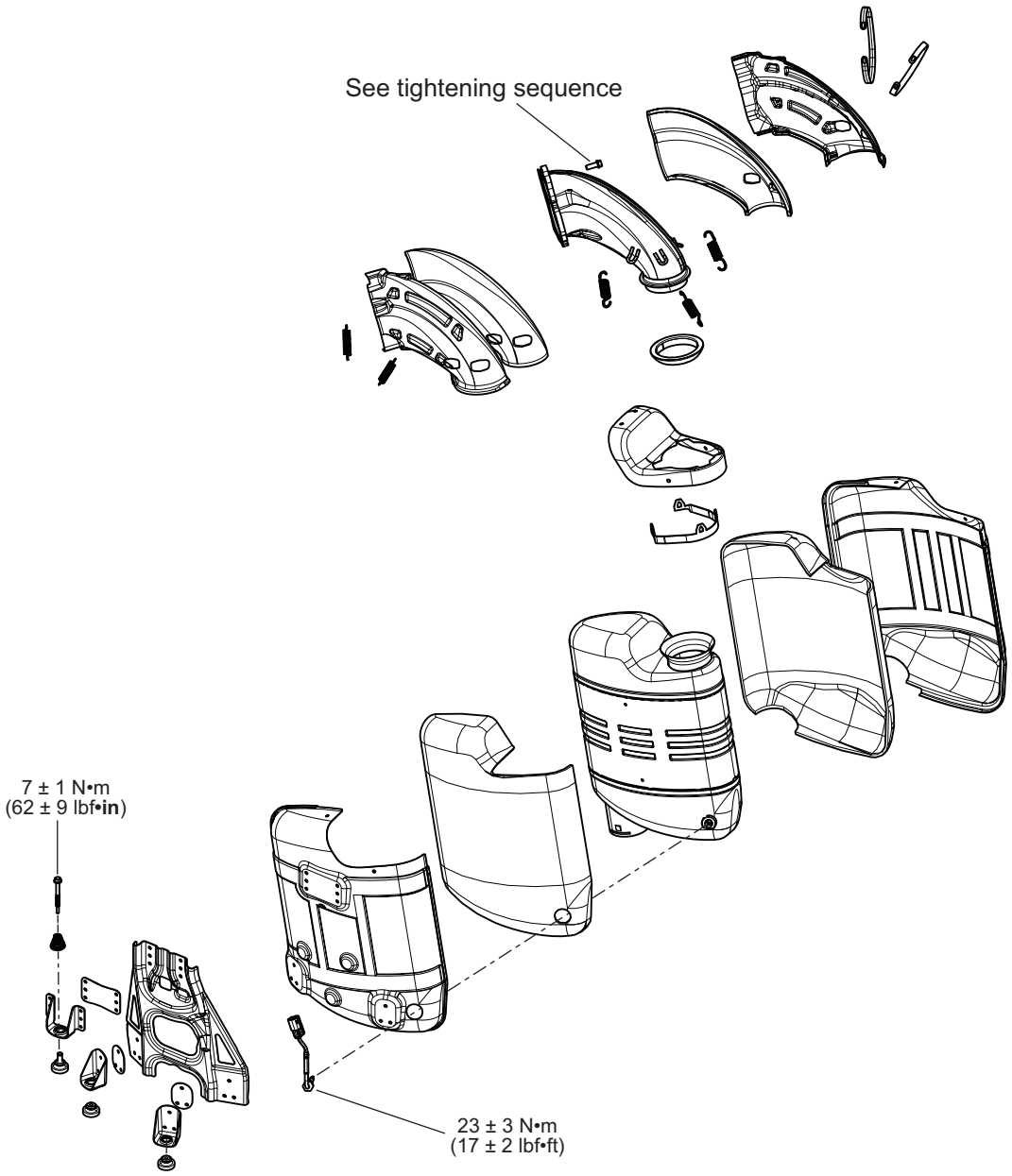

NEW = Component must be replaced when removed.

219101031-003-100

TUNED PIPE

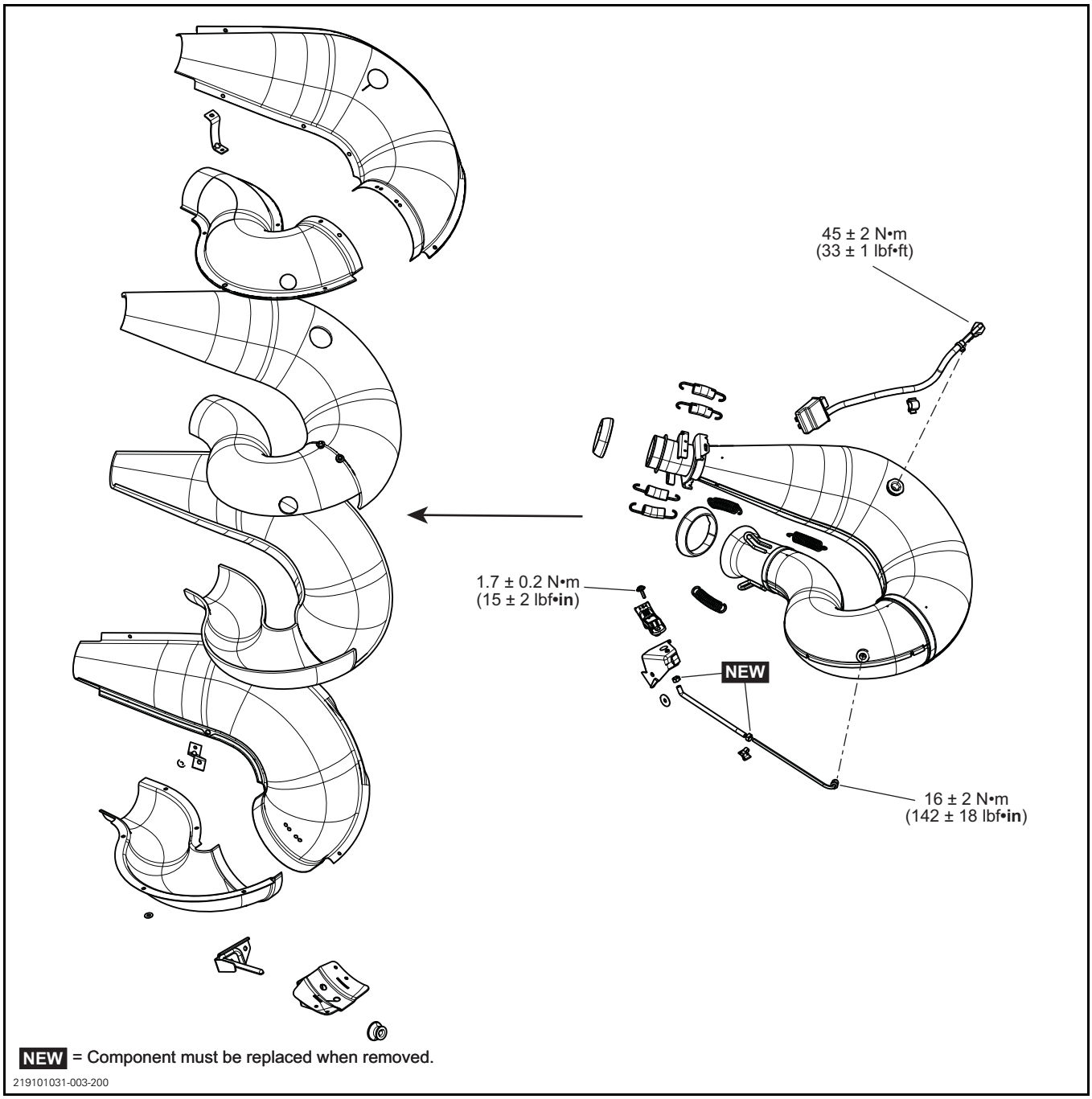
45 ± 2 N•m
(33 ± 1 lbf•ft)
1.7 ± 0.2 N•m
(15 ± 2 lbf•in)
NEW
16 ± 2 N•m
(142 ± 18 lbf•in)
NEW = Component must be replaced when removed.
219101031-003-200

GENERAL

⚠ WARNING

To avoid potential burns, never touch exhaust system components immediately after the engine has been running because these components are very hot. Let engine and exhaust system cool down before performing any servicing.

During assembly or installation, use the torque value and service products as in the exploded view.

⚠ WARNING

Torque wrench tightening specifications must be strictly adhered to.
Locking devices (e.g.: locking tabs, elastic stop nuts, self-locking fasteners, cotter pins, etc.) must be replaced with new ones.

MAINTENANCE

Check the following components for leaks, cracks, or other damages:
- Springs and retainers
- Muffler
- Muffler mounts
- Exhaust pipe
- Exhaust gaskets
- Tuned pipe
- Shields.

PROCEDURES

MUFFLER

Removing the Muffler

1. Remove the upper body module. Refer to *BODY* subsection.

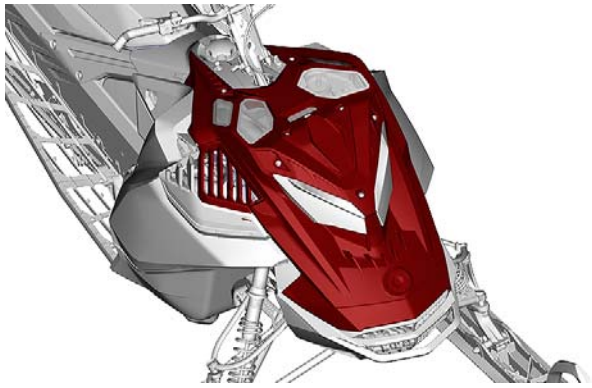
219101031-003-001

2. On the right side of the vehicle, remove the screw retaining the rear of the bottom pan.

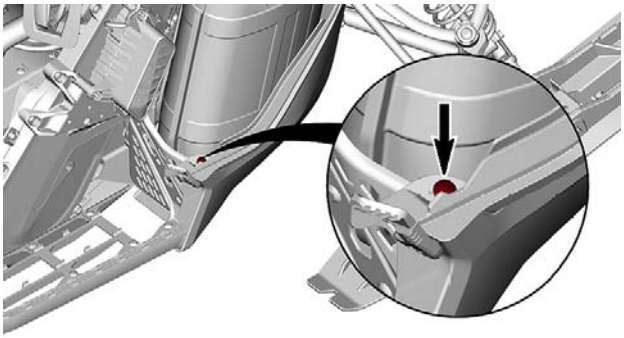
219101031-003-004

3. Remove exhaust springs retaining the exhaust pipe to muffler.

REQUIRED TOOL
SPRING INSTALLER/REMOVER (P/N 529 035 983)

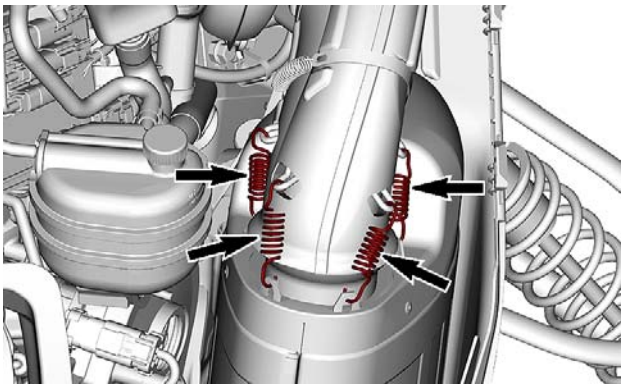
219101031-003-002

4. Behind the muffler, remove the retaining screw and its spring.

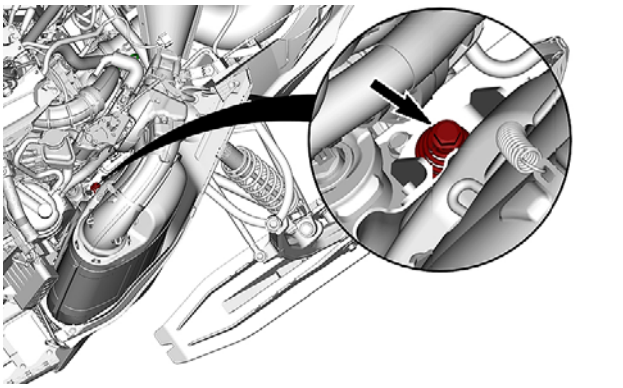
219101031-003-003

5. From underneath the turbo, remove the screw retaining the turbo support to the vertical member.

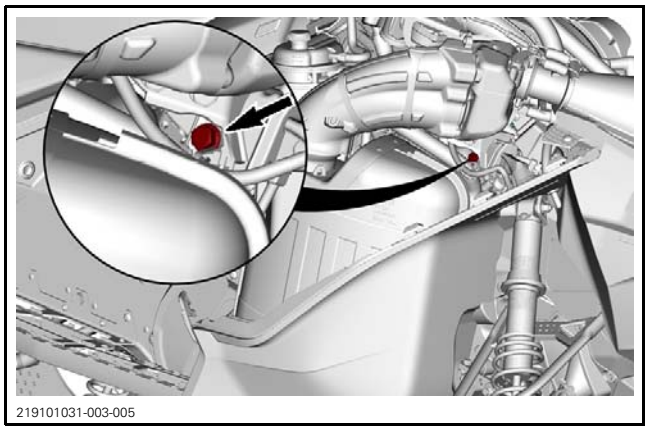
219101031-003-005

6. Disconnect the muffler EGTS connector.

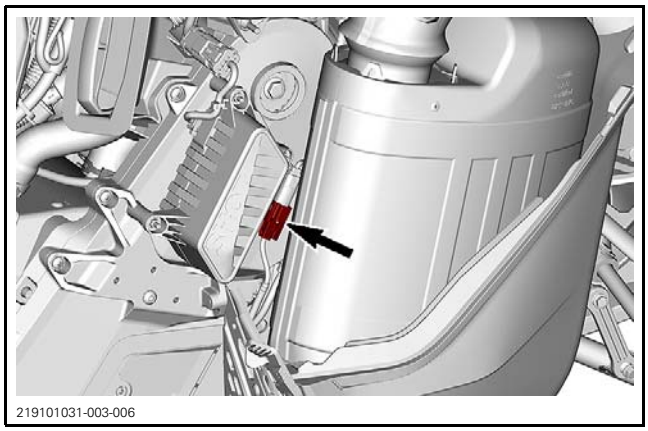
219101031-003-006

7. Lift the turbo slightly and remove the muffler.
8. Remove exhaust gasket.

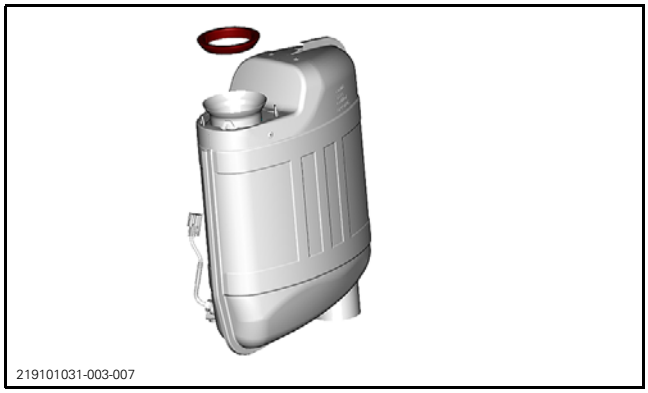
219101031-003-007

Inspecting the Muffler

Check the muffler for cracks or other damages.

Check grommet condition.

Inspect exhaust gasket condition. Replace as required.

Installing the Muffler

The installation is the reverse of the removal procedure. However, pay attention to the following.

Muffler Retaining Screw

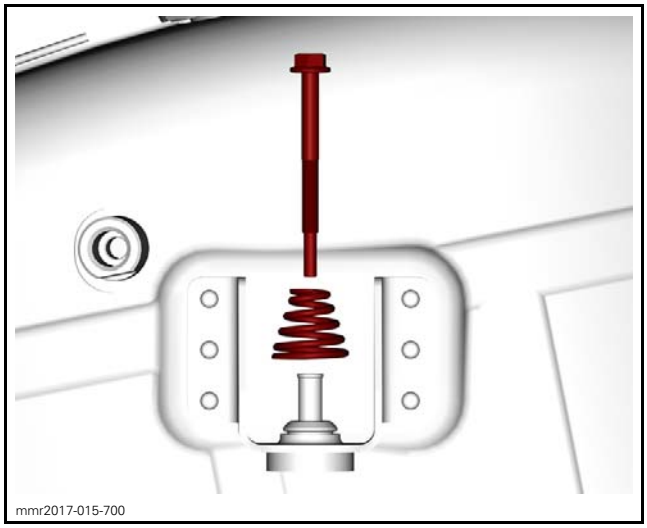
mmr2017-015-700

TIGHTENING TORQUE	
Muffler retaining screw	7 N•m ± 1 N•m (62 lbf•**in** ± 9 lbf•**in**)

EXHAUST PIPE

Removing the Exhaust Pipe

1. Remove the upper body module. Refer to *BODY* subsection.

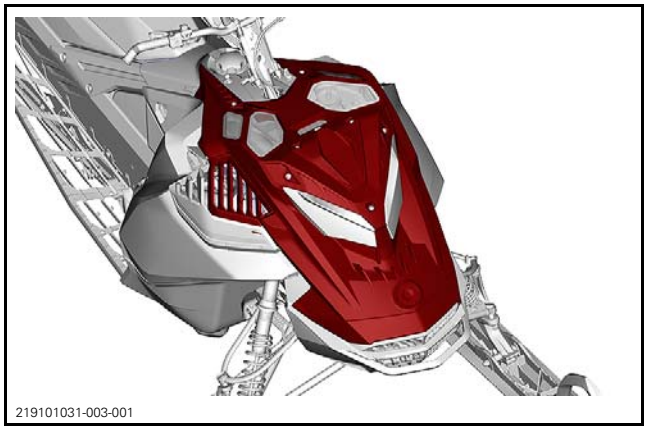
219101031-003-001

2. Remove exhaust springs (4x) retaining the exhaust pipe to muffler.

REQUIRED TOOL	
SPRING INSTALLER/REMOVER (P/N 529 035 983)	

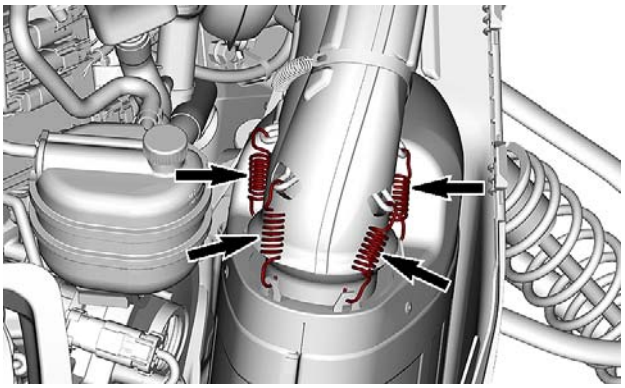
219101031-003-002

3. Remove shields and the insulating wool over the exhaust pipe.

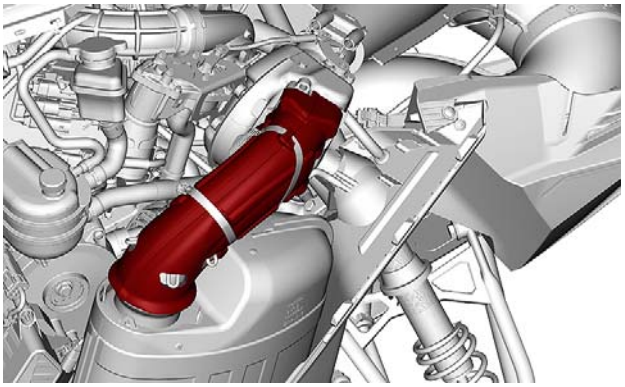
219101031-003-008

4. Remove exhaust pipe screws.

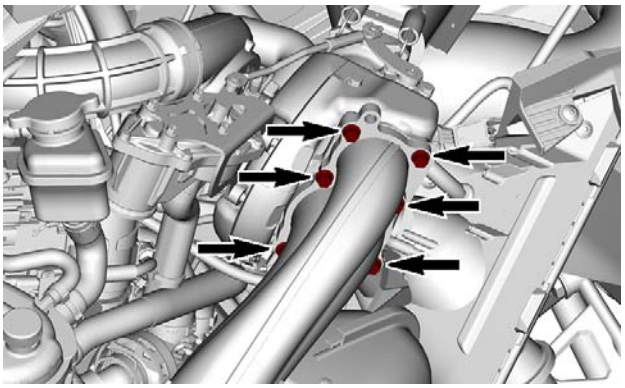
219101031-003-009

5. Remove the exhaust pipe.

Inspecting the Exhaust Pipe

Check the exhaust pipe for cracks or other damages.

Inspect exhaust gasket condition. Replace as required.

Installing the Exhaust Pipe

The installation is the reverse of the removal procedure. However, pay attention to the following.

TIGHTENING TORQUE		
Exhaust pipe screw	Step 1 (1 to 6)	4.5 N•m ± 1.5 N•m (40 lbf•**in** ± 13 lbf•**in**)
	Step 2 (7 to 12)	28 N•m ± 1 N•m (21 lbf•ft ± 1 lbf•ft)
	Step 3 (13 to 15)	28 N•m ± 1 N•m (21 lbf•ft ± 1 lbf•ft)

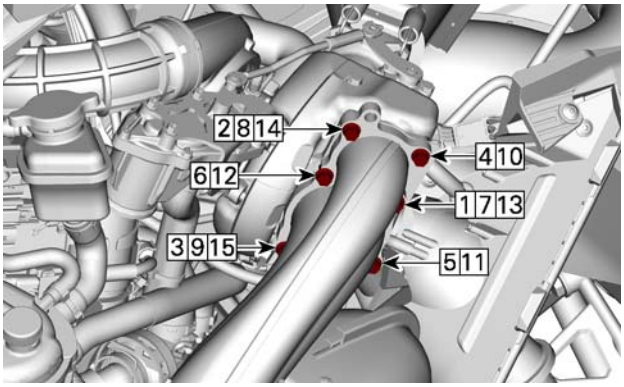

219101031-003-010

TIGHTENING SEQUENCE

TUNED PIPE

Removing the Tuned Pipe

1. Remove the upper body module. Refer to *BODY* subsection.

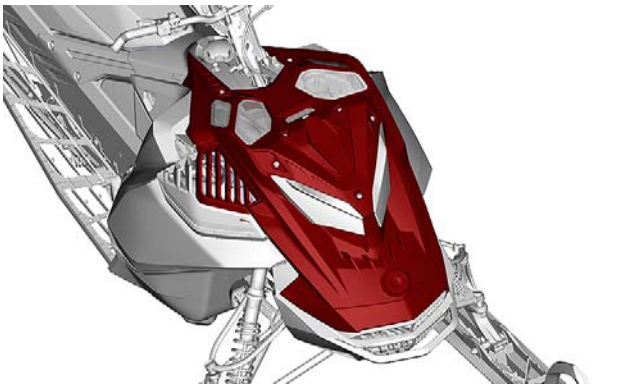
219101031-003-001

2. Remove exhaust springs (4x) retaining the tuned pipe to the turbocharger.

REQUIRED TOOL	
SPRING INSTALLER/REMOVER (P/N 529 035 983)	

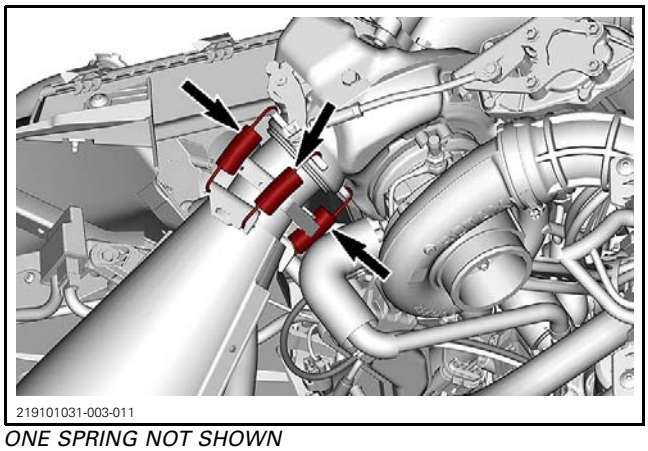

ONE SPRING NOT SHOWN

3. Remove exhaust springs (3x) retaining the tuned pipe to the exhaust manifold.

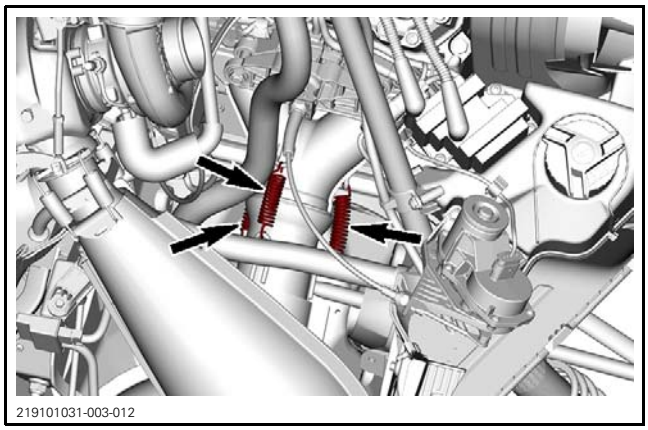

4. Disconnect the following connectors.

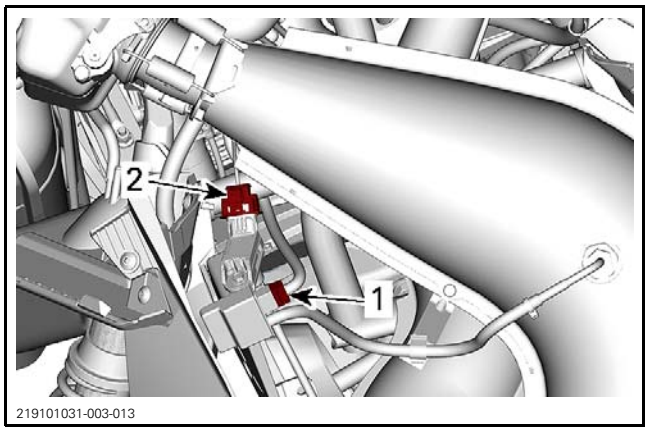

1. THCM
2. Pressure sensor

5. Remove the support's screw retaining the THCM and the pressure sensor on the vehicle side member.

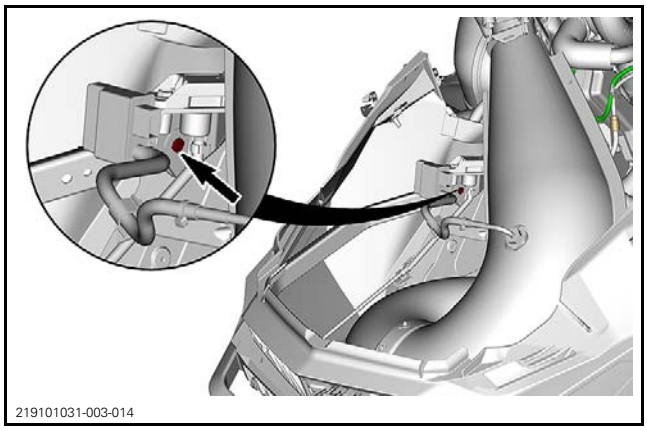

6. Remove tuned pipe.
7. Remove exhaust gasket.

Inspecting the Tuned Pipe

Check exhaust pipe for:
– Damages
– Cracks.

Inspect exhaust gasket condition. Replace as required.

Installing the Tuned Pipe

The installation is the reverse of the removal procedure.

EXHAUST GAS TEMPERATURE SENSOR (EGTS)

Testing the EGTS

Refer to *ELECTRONIC FUEL INJECTION (EFI)* to have the testing procedure.

Removing the EGTS

Disconnect the EGTS connector.

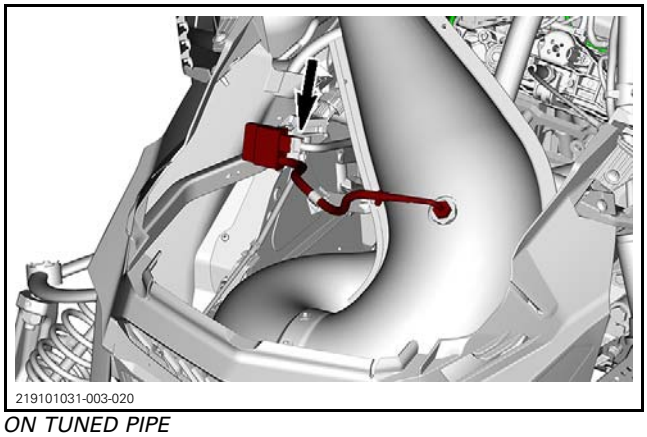

ON TUNED PIPE

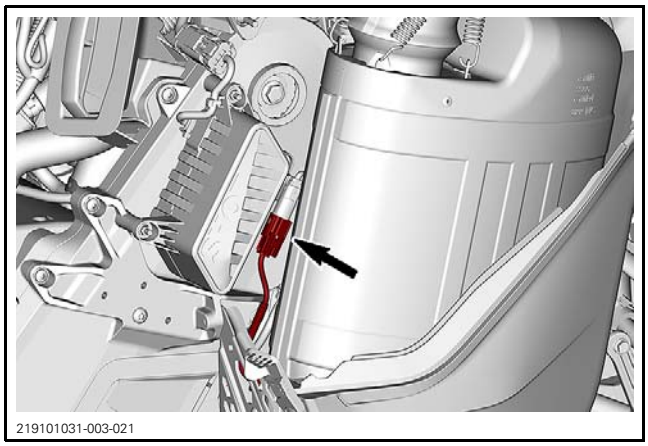

ON MUFFLER

Unscrew and remove sensor.

Installing the EGTS

The installation is the reverse of the removal procedure. However, pay attention to the following.

TIGHTENING TORQUE	
Exhaust Gas Temperature Sensor	45 N•m ± 2 N•m (33 lbf•ft ± 1 lbf•ft)

EXHAUST PRESSURE SENSOR (EPS)

The EPS continuously measures the air pressure inside the tuned pipe.

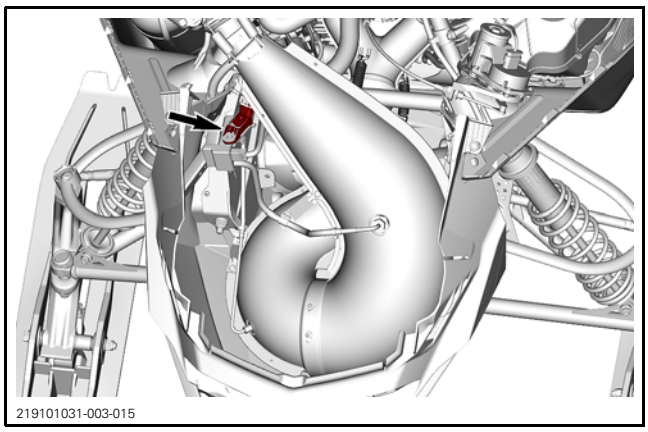

Testing the EPS

Testing the Pressure Function

1. Connect vehicle to the BRP diagnostic software (BUDS2). DO NOT START THE VEHICLE YET.
2. In BUDS2, click the following:
   – **Measurements** page
   – **ECM** button
   – **CUSTOM** tab.
3. Record the **Exhaust Pressure** reading. It should be near the atmospheric pressure.
4. Start the vehicle and observe the exhaust pressure. The reading should increase.

If there is no reading or if it does not change, carry out the *TESTING FOR INPUT VOLTAGE*.

If you doubt the sensor reading, try a new sensor.

When comparing the readings, values must be within specification.

ALLOWED DISCREPANCY PRESSURE VALUE
± 3.4 kPa (.5 PSI)

If the vehicle sensor value is out of this range, replace it.

Testing for Input Voltage

1. With the ignition key turned to **OFF**, disconnect sensor connector.
2. Turn ignition key **ON**.
3. Using a multimeter set to Vdc, test the voltage output from the ECM to the EPS as per following table.

EPS CONNECTOR		SPECIFICATION
PIN		VOLTAGE
1	2	5 Vdc

If voltage test is not good, refer to *TESTING FOR CIRCUIT CONTINUITY*.

If voltage test is good, replace the sensor.

Testing for Circuit Continuity

1. Disconnect ECM-A connector and install it on the ECM adapter tool. Refer to *ECM CONNECTOR ACCESS* in *ELECTRONIC FUEL INJECTION* subsection.
2. Using a multimeter set to "Ω", test wiring harness continuity between ECM and the sensor as per following table.

CIRCUIT CONTINUITY TEST		
ECM ADAPTER	ETS CONNECTOR	RESISTANCE
E4	Pin 1	Close to 0 Ω (continuity)
F4	Pin 2	
H3	Pin 3	

If continuity is not good, repair or replace wiring and connectors between ECM and sensor connector.

Replacing the EPS

1. Disconnect the EPS connector.
2. Remove the retaining screw.
3. Cut the Oetiker clamp and remove the hose from the ETS.

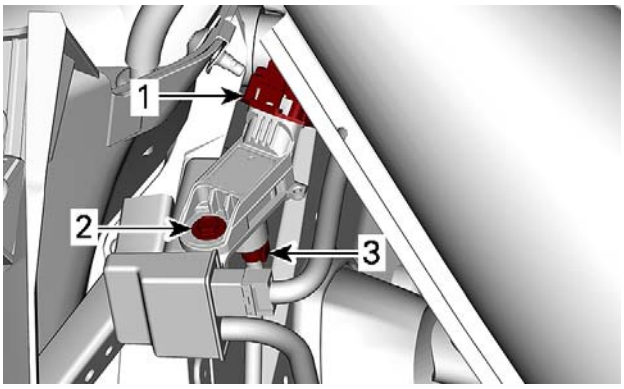

219101031-003-016

1. EPS connector
2. Sensor retaining screw
3. Oetiker clamp

4. Plug the hose on the new EPS and secure using a NEW Oetiker clamp.
5. Screw in the EPS and install the connector.

TIGHTENING TORQUE	
EPS retaining screw	1.7 N•m ± 0.2 N•m (15 lbf•**in** ± 2 lbf•**in**)

COOLING SYSTEM - VEHICLE COMPONENTS (600R E-TEC AND 850 E-TEC)

SERVICE TOOLS

Description	Part Number	Page
LARGE HOSE PINCHER	529 032 500	59
SMALL HOSE PINCHER	295 000 076	59
TEST CAP	529 035 991	58
VACUUM/PRESSURE PUMP	529 021 800	58

SERVICE PRODUCTS

Description	Part Number	Page
EXTENDED LIFE PRE-MIXED COOLANT (EUR)	779223	56
EXTENDED LIFE PRE-MIXED COOLANT	779150	56

With Front Radiator

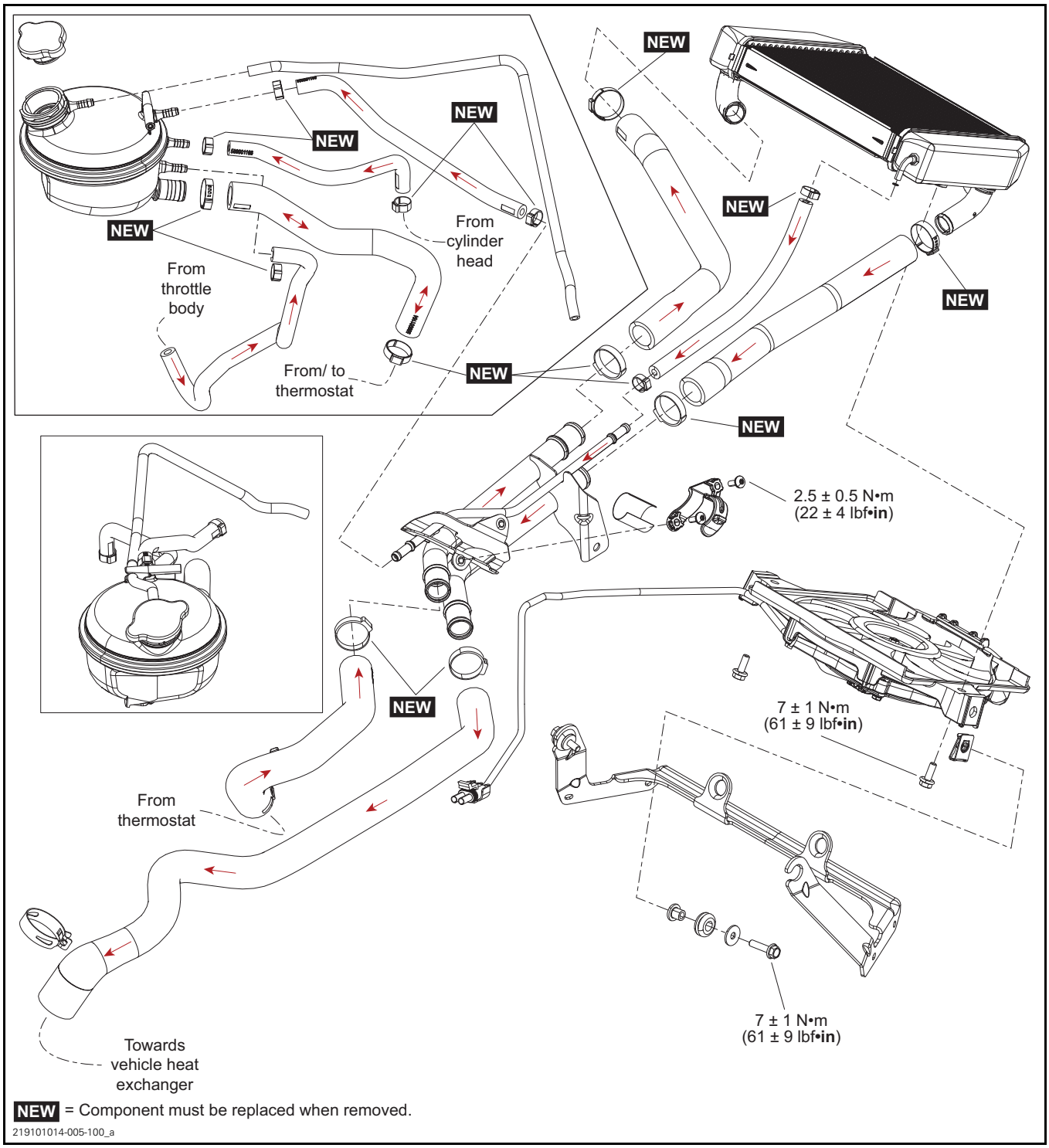

Without Front Radiator

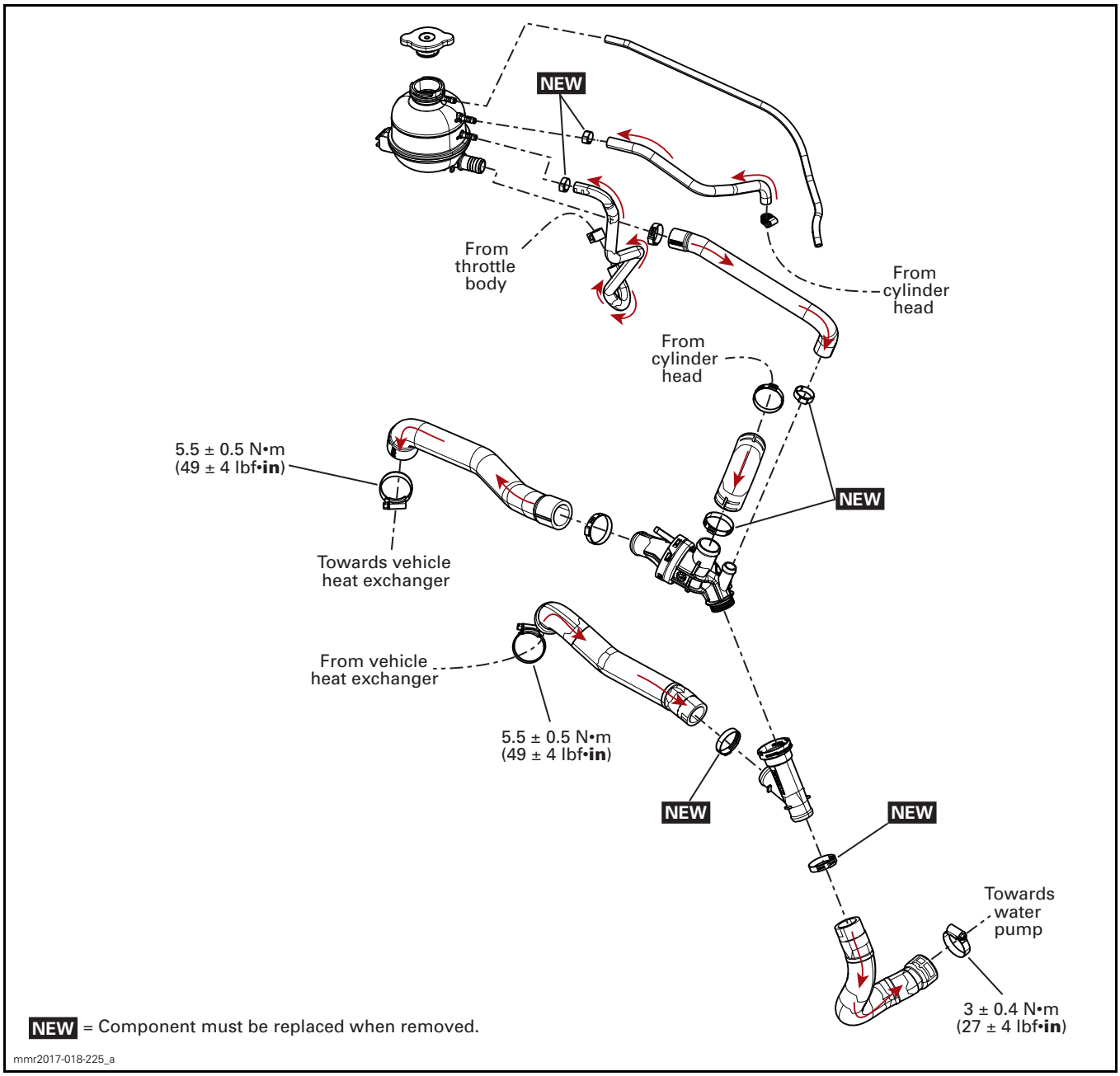

GENERAL

NOTE: It is a good practice to check for fault codes using BUDS2 software as a first troubleshooting step

During assembly/installation, use torque values and service products as shown in the exploded views.

Clean threads before applying a threadlocker. Refer to *SELF-LOCKING FASTENERS* and *LOCTITE APPLICATION* at the beginning of this manual for complete procedure.

WARNING

Torque wrench tightening specifications must be strictly adhered to.
Locking devices must be replaced with new ones when removed (e.g.: locking tabs, elastic stop nuts, self-locking fasteners, cotter pins, etc.).

MAINTENANCE

COOLING SYSTEM

WARNING

Never open coolant tank cap when engine is hot.

Verifying the Engine Coolant Level

Check coolant level at room temperature with the cap removed. Liquid should be at cold level line (engine cold) of coolant tank.

NOTE: When checking level at low temperature it may be slightly lower then the mark.

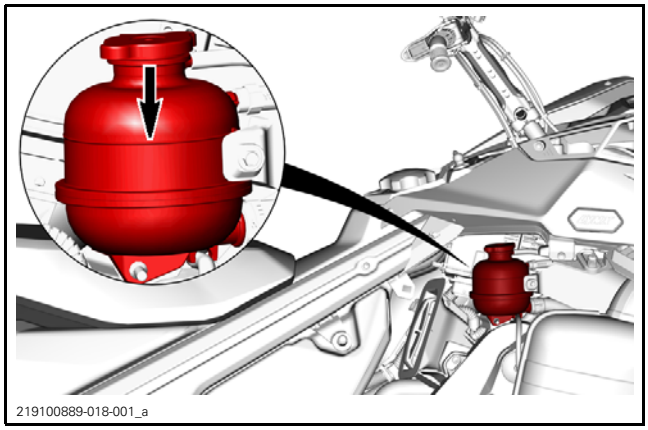

COLD LEVEL LINE

Verifying the Engine Coolant Strength

Remove pressure cap.

Use an antifreeze tester to test coolant strength.

MINIMUM RECOMMENDED COOLANT STRENGTH
-30°C (-22°F)

Replacing the Engine Coolant

Recommended Engine Coolant

COUNTRY	RECOMMENDED SERVICE PRODUCT
Scandinavia	EXTENDED LIFE PRE-MIXED COOLANT (EUR) (P/N 779223)
All other countries	EXTENDED LIFE PRE-MIXED COOLANT (P/N 779150)
Alternative, or if not available	A blend of 50% distilled water with 50% antifreeze (especially formulated for aluminum engines

To prevent antifreeze deterioration, always use the same brand. Never mix different brands unless cooling system is completely flushed and refilled.

NOTICE **To prevent rust formation or freezing condition, always replenish the system with the BRP premixed coolant or with 50% antifreeze and 50% distilled water. Do not use tap water, straight antifreeze or straight water in the system. Tap water contains minerals and impurities which build up in the system. During cold weather, straight water causes the system to freeze while straight antifreeze thickens (like slush ice) and does not have the same efficiency. Always use ethylene glycol antifreeze containing corrosion inhibitors specifically recommended for aluminum engines.**

Draining the Cooling System

WARNING

Never drain or refill the cooling system when engine is hot.

Remove muffler and tuned pipe. Refer to *EXHAUST SYSTEM* subsection.

Place a large drain pan under the vehicle bottom pan.

Remove coolant hose from water pump to drain coolant.

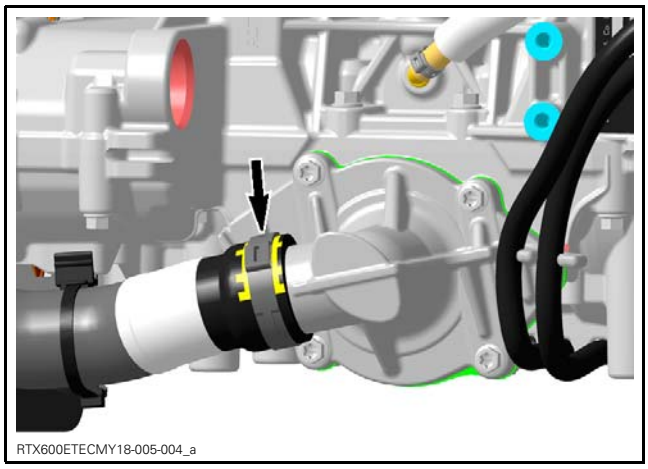

REMOVE CLAMP (DISCARD ORIGINAL INSTALLED 1–EAR CLAMP)

When coolant level is low enough, lift the rear of vehicle to drain the heat exchangers.

TYPICAL

Install and tighten coolant hose clamp on water pump.

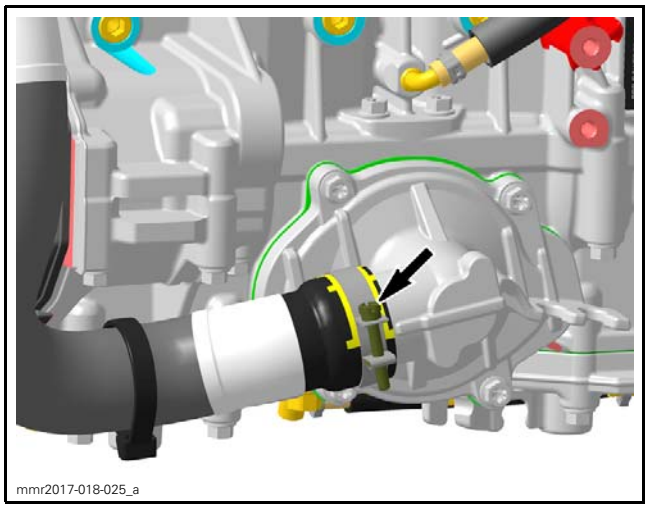

TIGHTENING TORQUE	
Coolant hose clamp	3 N•m ± 0.4 N•m (27 lbf•**in** ± 4 lbf•**in**)

Refilling and Bleeding the Cooling System

1. Apply parking brake.
2. Lift front of vehicle as shown and support it safely.

TYPICAL
A. 25 cm ± 5 cm (10 in ± 2 in)

3. With engine cold, slowly fill coolant tank up to COLD LEVEL line allowing time for the air in the cooling system to seep out.

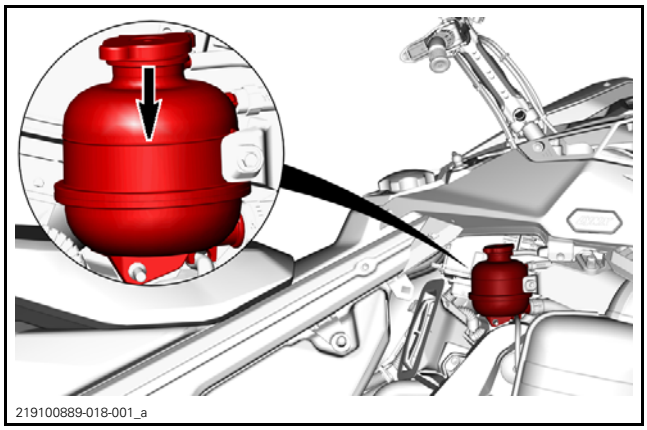

COLD LEVEL LINE

4. Start engine.
5. Refill coolant tank up to COLD LEVEL line while engine is idling until rear heat exchangers are warm to the touch (about 4 to 5 minutes).

NOTE: Always monitor coolant level while filling coolant tank to avoid emptying and thus allowing air to enter the system.

6. Install pressure cap.
7. Lower vehicle back to the ground.
8. Lift rear of vehicle and support it safely.

TYPICAL

⚠ WARNING

Before revving engine, ensure that the track is free of particles which could be thrown out while track is rotating. Keep hands, tools, feet and clothing clear of track. Always lift the snowmobile on a wide-base stand with a rear deflector panel. Ensure no one is standing in close proximity to the snowmobile, especially at the rear of the track. Centrifugal force could cause debris, damaged or loose studs, pieces of torn track, or an entire track to be violently thrown backwards out of the frame with tremendous force, possibly resulting in the loss of a leg or other serious injury.

9. Remove parking brake.
10. Activate throttle lever 3 - 4 times to bring engine speed to 7000 RPM.
11. Apply the brake.
12. Lower vehicle back to ground.
13. Stop engine.
14. Add coolant up to 15 mm (1/2 in) above the COLD LEVEL line.

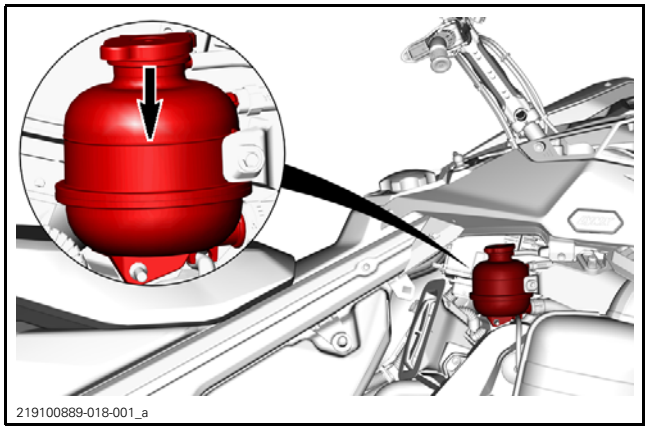

COLD LEVEL LINE

15. When engine has completely cooled down, recheck coolant level in coolant tank and refill up to line if needed.
16. Visual check for any leakages.
17. Perform *VERIFYING THE ENGINE COOLANT STRENGTH*. See procedure in this subsection.
18. Adjust mixture as necessary.
19. Reinstall removed parts.

INSPECTION

COOLING SYSTEM LEAK TEST

NOTE: This test confirms if there is a leak in the cooling system, including the engine.

⚠ WARNING

To prevent potential burns, do not remove the coolant tank cap if the engine is hot.

Remove the RH side panel.

Remove coolant tank cap.

Pressurize system through coolant tank.

REQUIRED TOOL	
TEST CAP (P/N 529 035 991)	
VACUUM/PRESSURE PUMP (P/N 529 021 800)	

TEST PRESSURE
100 kPa (15 PSI)

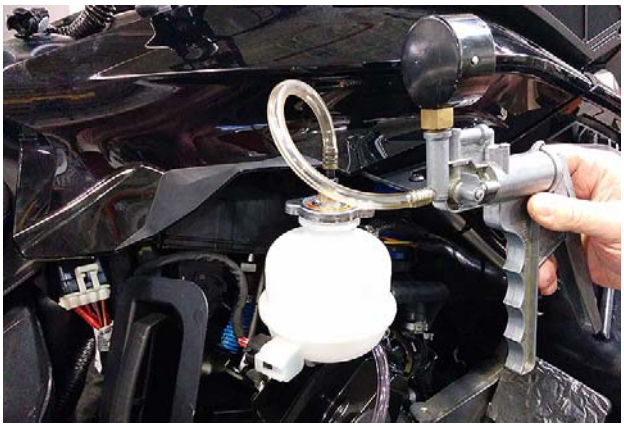

TYPICAL

If pressure drops, check all hoses and engine for coolant leaks. Spray a soap and water solution, and look for air bubbles.

If no external leak is found and pressure drops, carry out the *ENGINE COOLING CIRCUIT LEAK TEST* to find a potential engine internal leak.

PROCEDURES

COOLANT TANK CAP

Using a pressure cap tester, check the relief pressure of coolant tank cap as per specification.

CAP OPENING PRESSURE
110 kPa (16 PSI)

If the test failed, replace with a new cap with same specification.

NOTICE **Do not install a tank cap exceeding the recommended pressure.**

COOLANT TANK

Removing the Coolant Tank

1. Remove the RH side panel.
2. Siphon the coolant tank.
3. Unplug the upper vent hose.

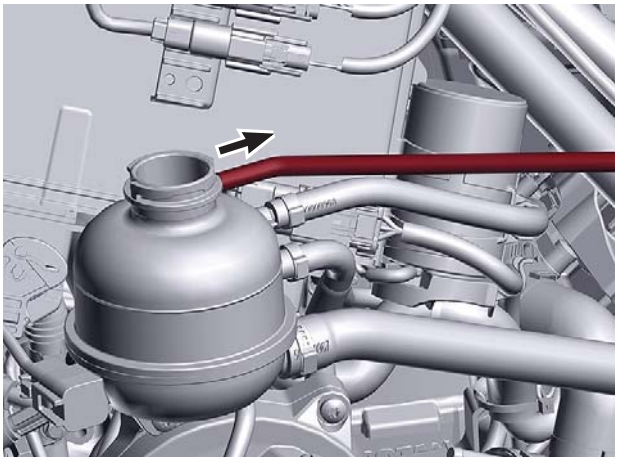

mmr2017-018-210_a

TYPICAL

4. Block the three lower coolant hoses with pinchers.

REQUIRED TOOL	
SMALL HOSE PINCHER (P/N 295 000 076)	

5. Cut Oetiker clamps and remove coolant hoses from coolant tank.

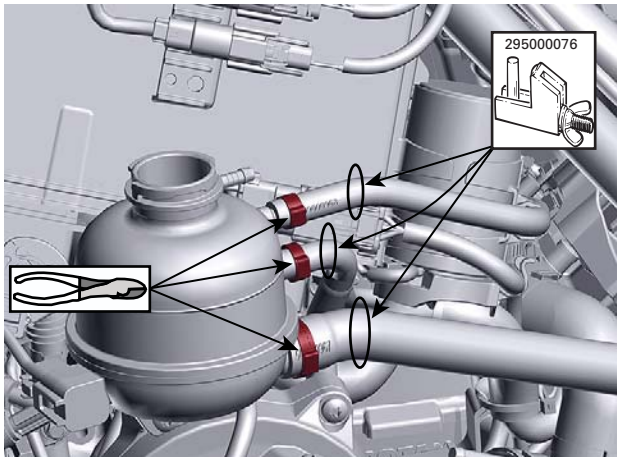

mmr2017-018-208_a

TYPICAL

6. Detach the coolant tank from the top of the chaincase.

Inspecting the Coolant Tank

Check if the tank is cracked or melted. Replace if necessary.

Installing the Coolant Tank

The installation is the reverse of the removal procedure. However, pay attention to the following.

Properly refill cooling system. Refer to *REFILLING AND BLEEDING THE COOLING SYSTEM* in this subsection.

FRONT RADIATOR

Removing the Front Radiator

1. Remove the upper body module. Refer to *BODY* subsection.
2. Cut cooling fan harness locking ties.
3. Disconnect cooling fan connector.
4. Install hose pinchers on radiator inlet and bleeder hoses.

REQUIRED TOOL	
SMALL HOSE PINCHER (P/N 295 000 076)	
LARGE HOSE PINCHER (P/N 529 032 500)	

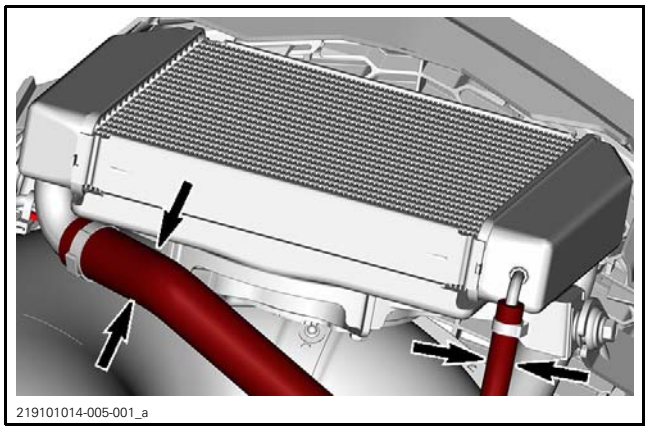
219101014-005-001_a

5. Remove radiator retaining screws.

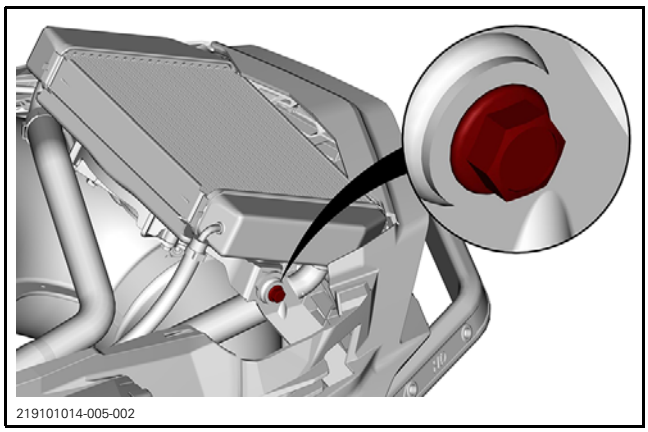
219101014-005-002

6. Pivot radiator on the RH side.
7. Install a hose pincher on the outlet hose.

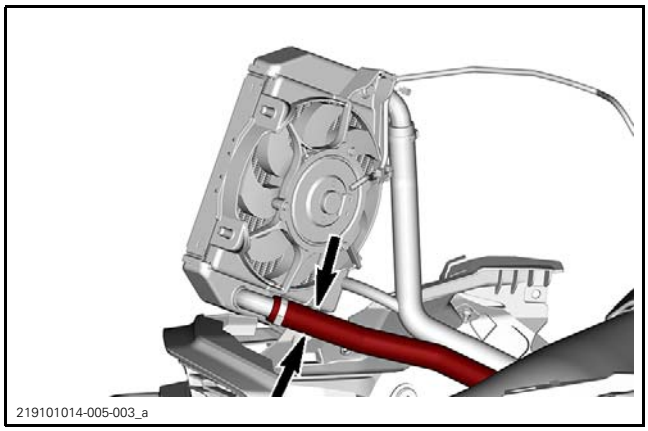
219101014-005-003_a

8. Place a coolant pan under the radiator.
9. Remove and discard Oetiker clamps.
10. Disconnect coolant hoses from radiator.
11. When empty, remove radiator from vehicle.

Installing the Front Radiator

The installation is the reverse of the removal procedure. However, pay attention to the following.

Install **NEW** Oetiker clamps to secure coolant hoses.

Properly refill cooling system. Refer to *REFILLING AND BLEEDING THE COOLING SYSTEM* in this subsection.

RADIATOR COOLING FAN

Radiator Cooling Fan Operation

The ECM controls the radiator cooling fan via the inputs of the coolant temperature sensor (CTS). Refer to the following table.

ENGINE TEMP.	65°C (149°F)	60°C (140°F)	85°C (185°F)
COOLING FAN	Turns ON	Turn OFF	ON
CHECK ENGINE LIGHT	—	—	OFF
MESSAGE IN GAUGE	—	—	- Limp Home - Hi Temp
LIMP HOME MODE	—	—	Gradual power reduction according to engine temperature.

If voltage decrease to 11 V and cooling fan is running, the ECM will shut it off. If voltage remains low and coolant temperature reaches 85°C (185°F), the ECM will turn on the cooling fan.

Cooling Fan Configuration in BUDS2

1. Connect vehicle to the BRP diagnostic software (BUDS2). Refer to *COMMUNICATION TOOLS* subsection.
2. In BUDS2, select the following:
   – **Settings** page
   – **ECM** button.
3. Ensure that **With fan** box is properly checked.

Testing the Radiator Cooling Fan

1. Connect the vehicle to the BRP diagnostic software (BUDS2). Refer to *COMMUNICATION TOOLS* for procedure and connector location.
2. In BUDS2, go to:
   – **Functions** page
   – **ECM** button
   – **IO Controls** tab.

3. Select **Activate Cooling Fan** action

If fan turns on, check the cooling temperature sensor (CTS). Refer to *ELECTRONIC FUEL INJECTION* subsection.

If fan does not turn on when the **Activate Cooling Fan** button is pressed, refer to the following troubleshooting chart.

COOLING FAN TROUBLESHOOTING CHART		
Is fan working?	YES →	Everything is OK
NO ↓		
Check fan fuse (15A). Is fuse burnt?	YES →	Replace fuse Is fan working?
NO ↓		
Bypass fan relay Refer to *BYPASSING THE RADIATOR FAN RELAY*		
↓		
Fan turns?	YES →	Replace relay Is fan working?
NO ↓		
Apply 12 Vdc to fan connector		
↓		
Fan turns?	NO →	Replace fan Is fan working?
YES ↓		
Check wiring harness and connectors (Refer to *TESTING THE COOLING FAN CIRCUIT CONTINUITY*)		
↓		
Harness and connectors good?	NO →	Repair or replace defective part(s)
YES ↓		
Check CTS (Refer to *ELECTRONIC FUEL INJECTION* subsection)		
↓		
CTS works?	NO →	Replace CTS Is fan working?
YES ↓		
Try a new ECM	→	Is fan working?

Bypassing the Radiator Fan Relay

1. Remove the fan relay. Refer to *WIRING DIAGRAM* for relay identification.

2. Install a fused jumper wire between relay pins 30 and 87.

Testing the Radiator Fan Relay

1. Pull on the fan relay without completely removing it. Refer to *WIRING DIAGRAM* for relay identification.
2. Install a fused jumper wire between pin 86 and battery negative (-) post.

If the relay "clicks", it is good.

If the relay does not "click", continue with the following test.

INPUT VOLTAGE AT COOLING FAN RELAY TEST		
FAN RELAY PIN	BATTERY POST	SPECIFICATION
85	Negative (-)	Battery voltage
87		

If reading is to specification, replace the relay.

If reading is not to specification:
- Check the fuse
- Check the power supply circuit continuity. Refer to *WIRING DIAGRAM*.

Testing the Cooling Fan Circuit Continuity

If one of the following tests is not to specification, repair the terminals and the wire accordingly.

COOLING FAN MOTOR POWER CIRCUIT CONTINUITY TEST		
FAN CONNECTOR PIN	FUSE BOX TERMINAL	SPECIFICATION
B	D6	Close to 0 Ω

COOLING FAN MOTOR GROUND CIRCUIT CONTINUITY TEST		
FAN CONNECTOR PIN	BATTERY	SPECIFICATION
A	Negative (-) post	Close to 0 Ω

COOLING FAN MOTOR CONTROL CIRCUIT CONTINUITY TEST		
FUSE BOX TERMINAL	ECM ADAPTER PIN	SPECIFICATION
D5	B-J2	Close to 0 Ω

COOLING FAN MOTOR POWER CIRCUIT CONTINUITY TEST		
FUSE BOX TERMINAL		SPECIFICATION
C5	D4	Close to 0 Ω

Removing the Radiator Cooling Fan

1. Remove the radiator.
2. Remove fan retaining screws.
3. Remove the radiator fan.

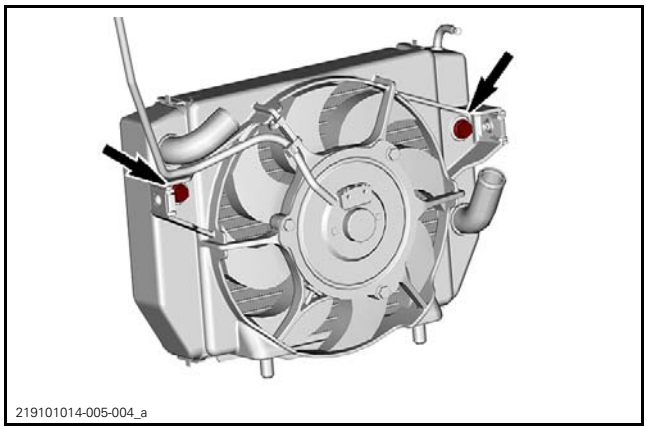

Installing the Radiator Cooling Fan

The installation is the reverse of the removal procedure.

COOLING SYSTEM - VEHICLE COMPONENTS (850 E-TEC TURBO)

SERVICE TOOLS

Description	Part Number	Page
SMALL HOSE PINCHER	295 000 076	69
TEST CAP	529 035 991	69
VACUUM/PRESSURE PUMP	529 021 800	69

SERVICE PRODUCTS

Description	Part Number	Page
EXTENDED LIFE PRE-MIXED COOLANT (EUR)	779223	66
EXTENDED LIFE PRE-MIXED COOLANT	779150	66

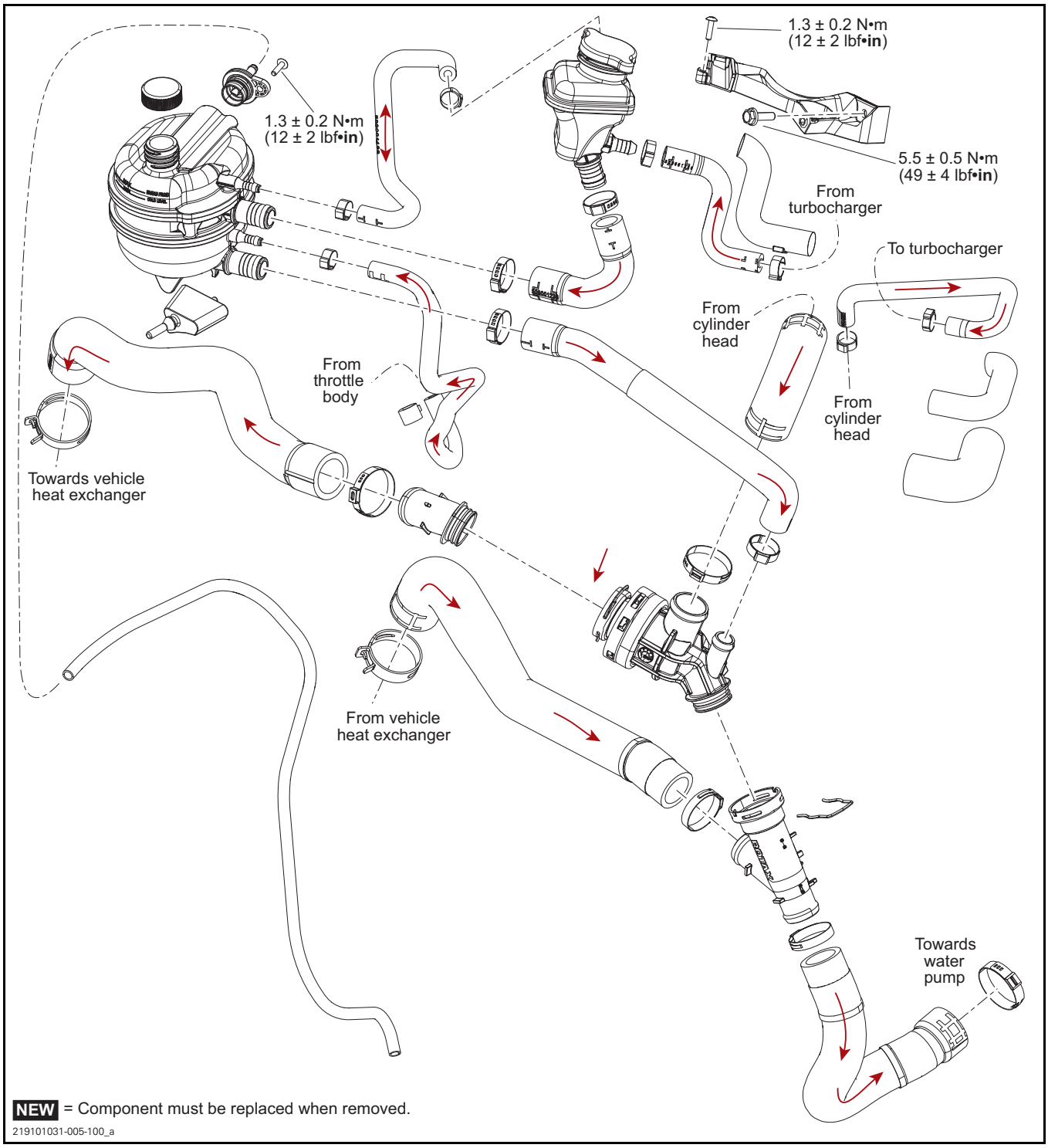
1.3 ± 0.2 N•m
(12 ± 2 lbf•in)
1.3 ± 0.2 N•m
(12 ± 2 lbf•in)
5.5 ± 0.5 N•m
(49 ± 4 lbf•in)
From
turbocharger
To turbocharger
From
cylinder
head
From
throttle
body
From
cylinder
head
Towards vehicle
heat exchanger
From vehicle
heat exchanger
Towards
water
pump
NEW = Component must be replaced when removed.
219101031-005-100_a

GENERAL

NOTE: It is a good practice to check for fault codes using BUDS2 software as a first troubleshooting step

During assembly/installation, use torque values and service products as shown in the exploded views.

Clean threads before applying a threadlocker. Refer to *SELF-LOCKING FASTENERS* and *LOCTITE APPLICATION* at the beginning of this manual for complete procedure.

⚠ WARNING

Torque wrench tightening specifications must be strictly adhered to.
Locking devices must be replaced with new ones when removed (e.g.: locking tabs, elastic stop nuts, self-locking fasteners, cotter pins, etc.).

MAINTENANCE

COOLING SYSTEM

⚠ WARNING

Never open coolant tank cap when engine is hot.

Verifying the Engine Coolant Level

Remove the upper body module. Refer to *BODY* subsection for procedure.

Check coolant level at room temperature with the cap removed.

NOTE: When checking level at low temperature it may be slightly lower then the mark.

Liquid should be at cold level line of the coolant tank filler neck.

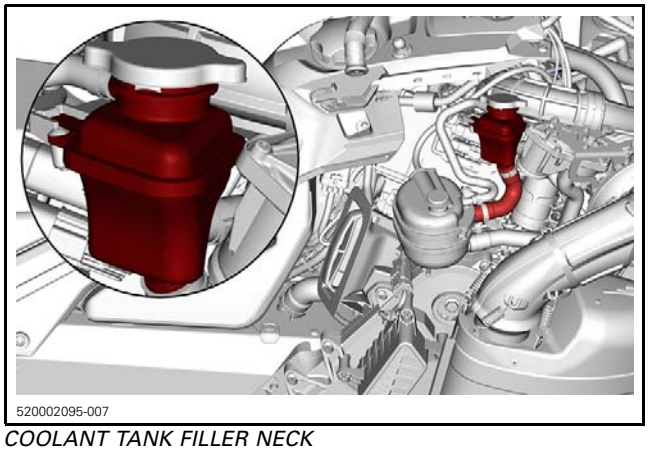

COOLANT TANK FILLER NECK

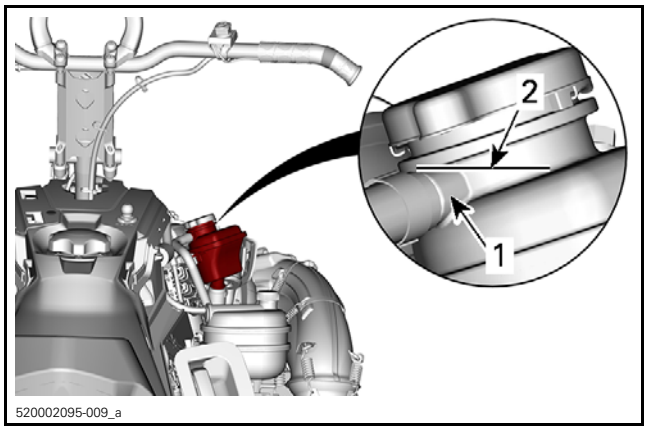

FILLER NECK
1. *Upper nozzle*
2. *Cold level line - top of upper nozzle*

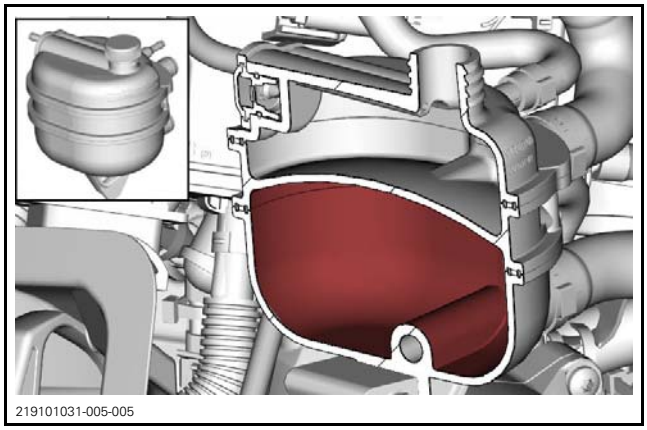

COOLANT TANK - CROSS SECTION

Liquid should be between MIN and MAX cold level lines of the reserve tank.

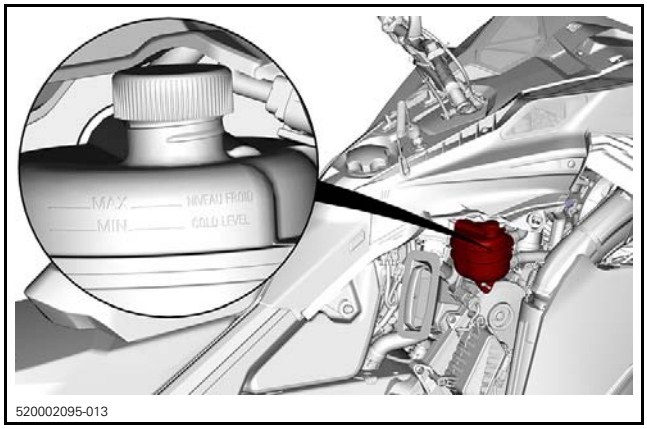

RESERVE TANK - MIN AND MAX COLD LEVEL LINES

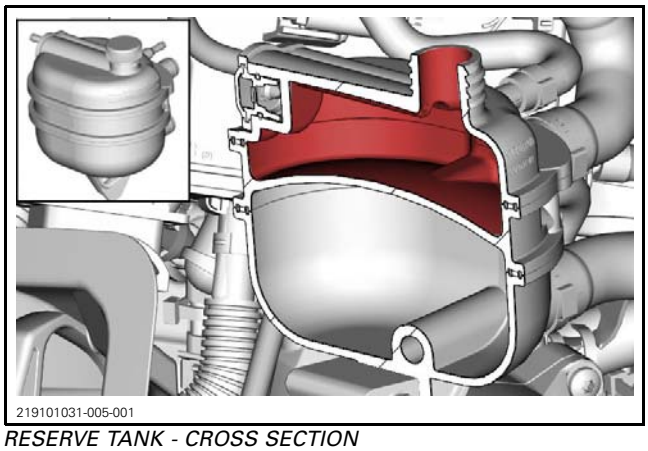

RESERVE TANK - CROSS SECTION

Verifying the Engine Coolant Strength

Remove pressure cap.

Use an antifreeze tester to test coolant strength.

MINIMUM RECOMMENDED COOLANT STRENGTH
-30°C (-22°F)

Replacing the Engine Coolant

Recommended Engine Coolant

COUNTRY	RECOMMENDED SERVICE PRODUCT
Scandinavia	EXTENDED LIFE PRE-MIXED COOLANT (EUR) (P/N 779223)
All other countries	EXTENDED LIFE PRE-MIXED COOLANT (P/N 779150)
Alternative, or if not available	A blend of 50% distilled water with 50% antifreeze (especially formulated for aluminum engines

To prevent antifreeze deterioration, always use the same brand. Never mix different brands unless cooling system is completely flushed and refilled.

NOTICE To prevent rust formation or freezing condition, always replenish the system with the BRP premixed coolant or with 50% antifreeze and 50% distilled water. Do not use tap water, straight antifreeze or straight water in the system. Tap water contains minerals and impurities which build up in the system. During cold weather, straight water causes the system to freeze while straight antifreeze thickens (like slush ice) and does not have the same efficiency. Always use ethylene glycol antifreeze containing corrosion inhibitors specifically recommended for aluminum engines.

Draining the Cooling System

⚠ WARNING

Never drain or refill the cooling system when engine is hot.

Remove muffler and tuned pipe. Refer to *EXHAUST SYSTEM* subsection.

Place a large drain pan under the vehicle bottom pan.

Remove coolant hose from water pump to drain coolant.

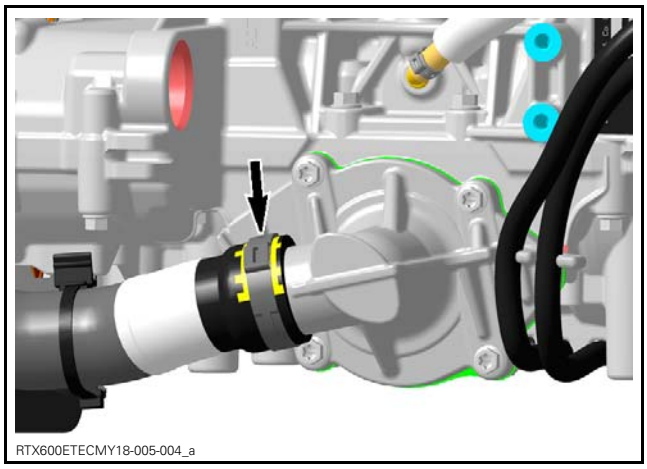

REMOVE CLAMP (DISCARD ORIGINAL INSTALLED 1–EAR CLAMP)

When coolant level is low enough, lift the rear of vehicle to drain the heat exchangers.

TYPICAL

Install and tighten coolant hose clamp on water pump.

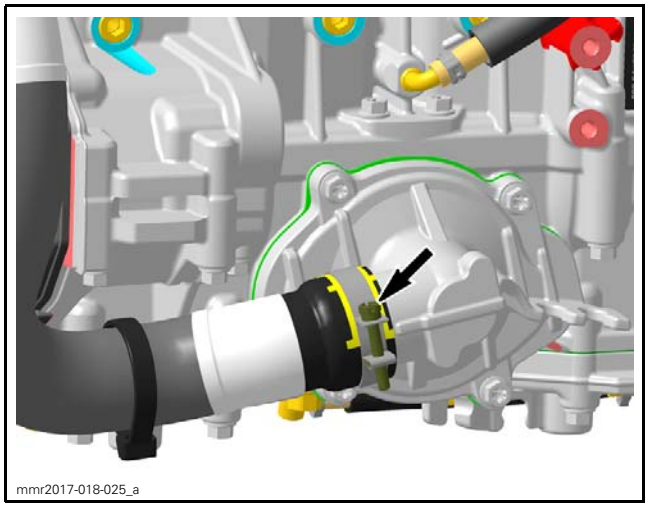

TIGHTENING TORQUE	
Coolant hose clamp	3 N•m ± 0.4 N•m (27 lbf•**in** ± 4 lbf•**in**)

If replacing the coolant, use a vacuum pump to remove the coolant from the reserve tank.

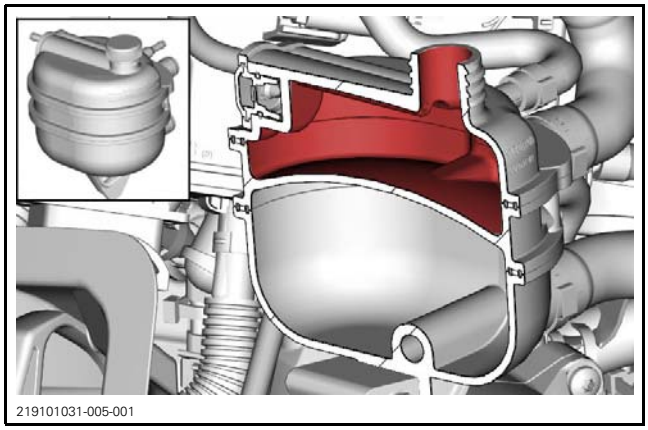

Refilling and Bleeding the Cooling System

1. Apply parking brake.
2. Lift front of vehicle as shown and support it safely.

TYPICAL
A. 25 cm ± 5 cm (10 in ± 2 in)

3. With engine cold, slowly fill coolant tank filler neck up to COLD LEVEL line allowing time for the air in the cooling system to seep out.

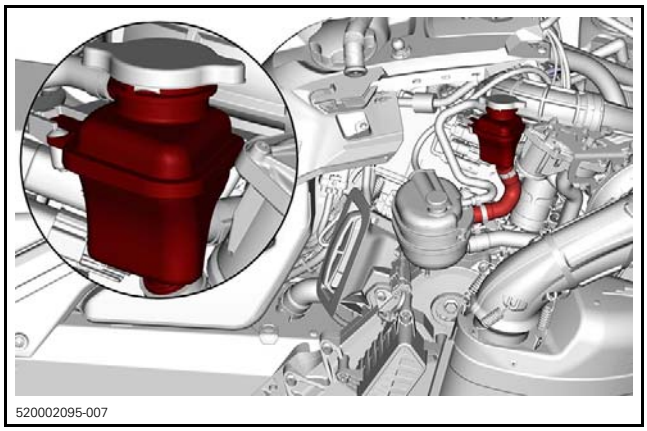

COOLANT TANK FILLER NECK

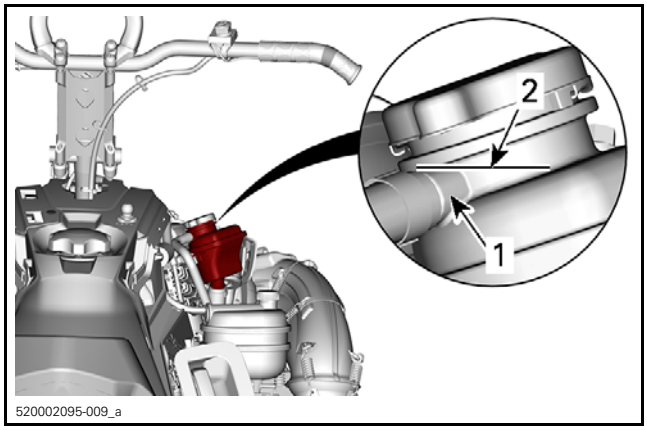

FILLER NECK
1. Upper nozzle
2. Cold level line - Top of upper nozzle

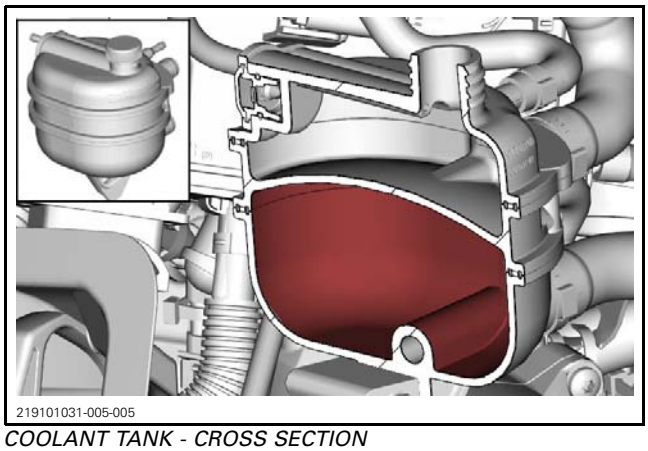

COOLANT TANK - CROSS SECTION

4. Fill the reserve tank neck between MIN and MAX cold level lines.

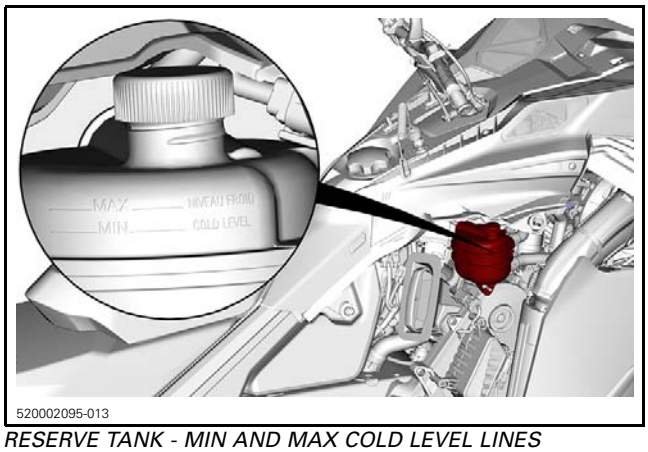

RESERVE TANK - MIN AND MAX COLD LEVEL LINES

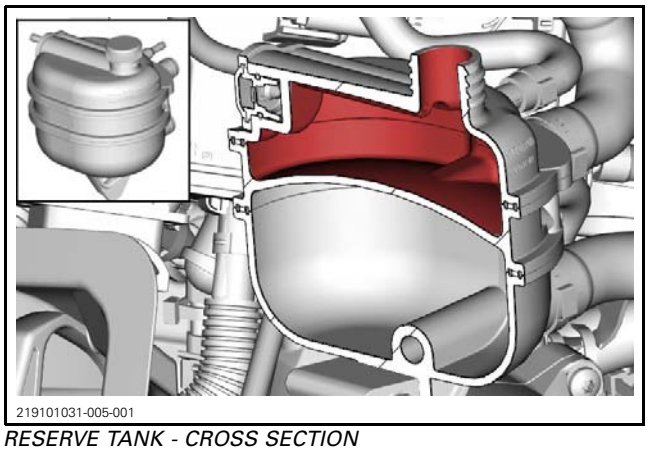

RESERVE TANK - CROSS SECTION

5. Start engine.
6. Refill coolant tank filler neck and the reserve tank up to COLD LEVEL line while engine is idling until rear heat exchangers are warm to the touch (about 4 to 5 minutes).

NOTE: Always monitor coolant level while filling coolant tank to avoid emptying and thus allowing air to enter the system.

7. Install pressure cap.
8. Lower vehicle back to the ground.
9. Lift rear of vehicle and support it safely.

TYPICAL

⚠ WARNING

Before revving engine, ensure that the track is free of particles which could be thrown out while track is rotating. Keep hands, tools, feet and clothing clear of track. Always lift the snowmobile on a wide-base stand with a rear deflector panel. Ensure no one is standing in close proximity to the snowmobile, especially at the rear of the track. Centrifugal force could cause debris, damaged or loose studs, pieces of torn track, or an entire track to be violently thrown backwards out of the frame with tremendous force, possibly resulting in the loss of a leg or other serious injury.

10. Remove parking brake.
11. Activate throttle lever 3 - 4 times to bring engine speed to 7000 RPM.
12. Apply the brake.
13. Lower vehicle back to ground.
14. Stop engine.
15. When engine has completely cooled down, recheck coolant level in coolant tank filler neck and the reserve tank. Refill up to line if needed.
16. Visual check for any leakages.
17. Perform *VERIFYING THE ENGINE COOLANT STRENGTH*. See procedure in this subsection.
18. Adjust mixture as necessary.
19. Reinstall removed parts.

INSPECTION

COOLING SYSTEM LEAK TEST

NOTE: This test confirms if there is a leak in the cooling system, including the engine.

⚠ WARNING

To prevent potential burns, do not remove the coolant tank cap if the engine is hot.

Remove the RH side panel.

Remove coolant tank cap.

Pressurize system through coolant tank.

REQUIRED TOOL	
TEST CAP (P/N 529 035 991)	
VACUUM/PRESSURE PUMP (P/N 529 021 800)	

TEST PRESSURE
100 kPa (15 PSI)

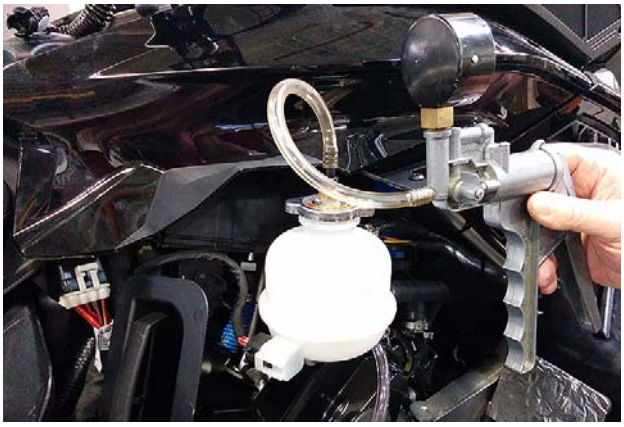

mmr2017-018-200

TYPICAL

If pressure drops, check all hoses and engine for coolant leaks. Spray a soap and water solution, and look for air bubbles.

If no external leak is found and pressure drops, carry out the *ENGINE COOLING CIRCUIT LEAK TEST* to find a potential engine internal leak.

PROCEDURES

COOLANT TANK CAP

Using a pressure cap tester, check the relief pressure of coolant tank cap as per specification.

CAP OPENING PRESSURE
110 kPa (16 PSI)

If the test failed, replace with a new cap with same specification.

NOTICE **Do not install a tank cap exceeding the recommended pressure.**

COOLANT TANK

Removing the Coolant Tank

1. Remove the upper body module..
2. Siphon both coolant tanks.
3. Unplug the upper vent hose.

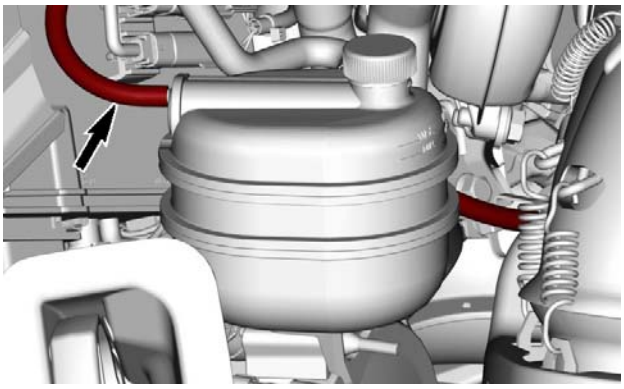

219101031-005-002_a

4. Block the coolant hoses with pinchers.

REQUIRED TOOL	
SMALL HOSE PINCHER (P/N 295 000 076)	

5. Cut Oetiker clamps and remove coolant hoses from coolant tank and filler neck.

NOTE: Filler neck, hoses and coolant tank can be removed as an assembly.

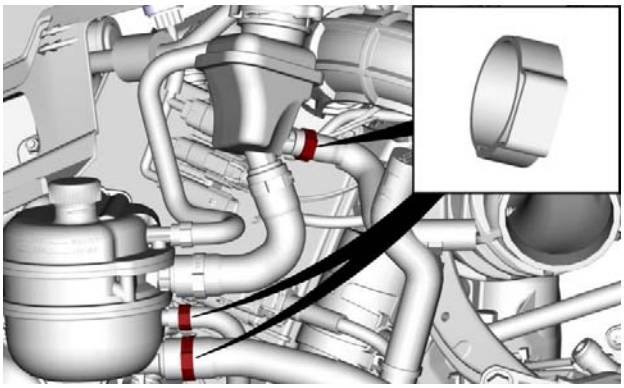

219101031-005-003

6. Remove filler neck retaining screw.

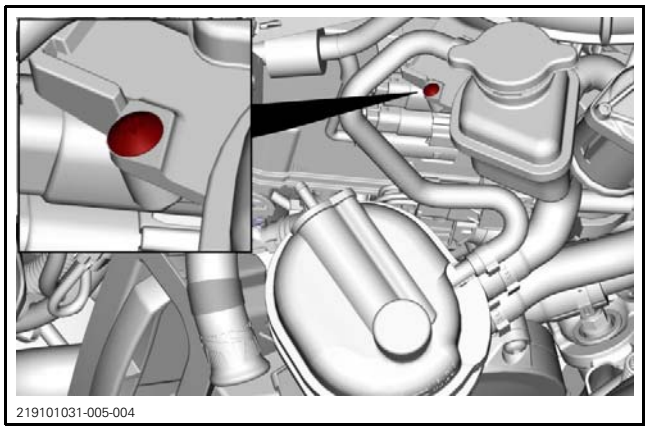

7. Detach the coolant tank from the bracket.

Inspecting the Coolant Tank and the Filler Neck

Check if the parts are cracked or melted. Replace if necessary.

Installing the Coolant Tank and the Filler Neck

The installation is the reverse of the removal procedure. However, pay attention to the following.

Properly refill cooling system. Refer to *REFILLING AND BLEEDING THE COOLING SYSTEM* in this subsection.

ENGINE MANAGEMENT SYSTEM (EMS)

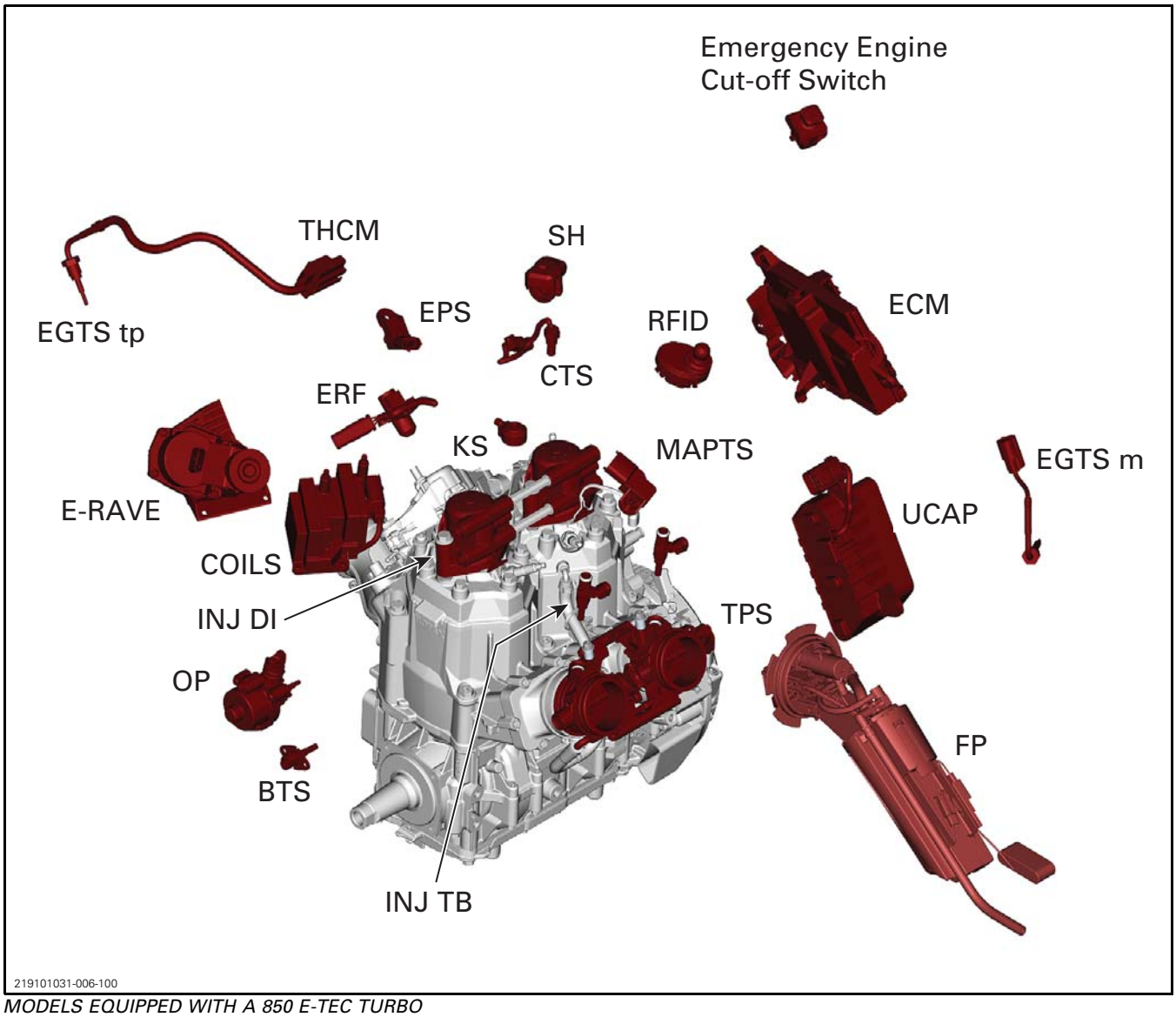

MODELS EQUIPPED WITH A 850 E-TEC TURBO

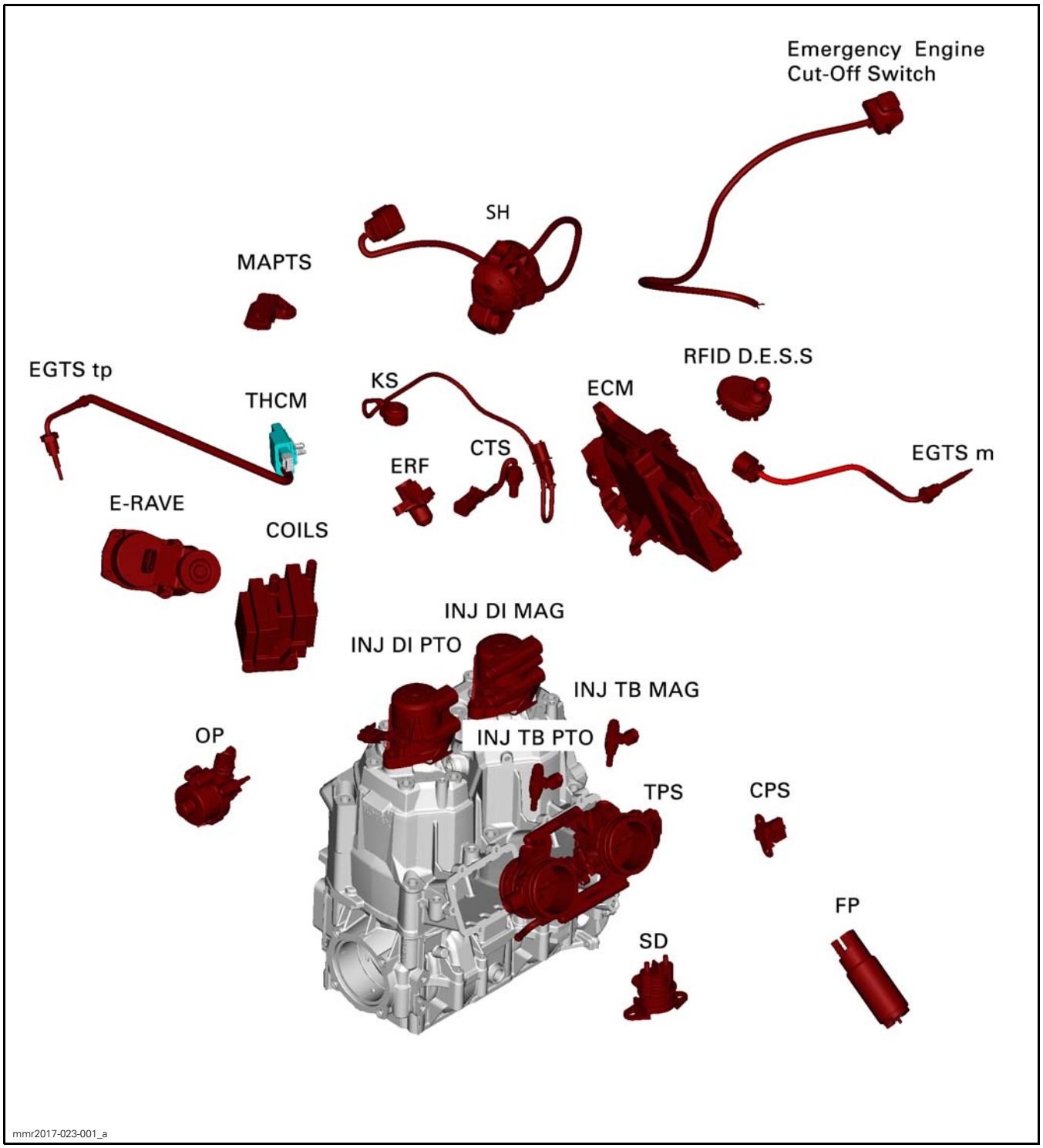

ALL OTHER MODELS

GENERAL

ACRONYM	DEFINITION
SH	Left hand multi-function switch
COILS	Ignition Coils
CPS	Crankshaft Position Sensor
CTS	Coolant Temperature Sensor
RFID DESS	Digitally Encoded Security System
ECM	Engine Control Module
EGTSm	Exhaust Gas Temperature Sensor muffler
EGTStp	Exhaust Gas Temperature Sensor tuned pipe
FP	Fuel Pump
INJ DI MAG	E-TEC Direct Injector (Mag Side)
INJ DI PTO	E-TEC Direct Injector (PTO Side)
INJ TB MAG	Throttle body Injector (Mag Side)
INJ TB PTO	Throttle body Injector (PTO Side)
KS	Knock Sensor
MAPTS	Manifold (intake) Air Pressure / Temperature Sensor
OP	Oil Pump
ERF	Rave Position Sensor
E-RAVE	Rave Actuator
SD	Starter Solenoid
TPS	Throttle Position Sensor
THCM	Thermocouple Module
BTS	Belt Temperature Sensor
UCAP	Ultra Capacitor
EPS	Exhaust Pressure Sensor

SYSTEM DESCRIPTION

The Engine Control Module (ECM) ensures a high power output with a clean combustion with practically no exhaust smoke.

There are 8 main systems that are controlled by the ECM:

1. E-TEC Direct fuel injection
2. Throttle body injection
3. Ignition system
4. Starting system
5. Rotax electronic reverse (RER)
6. Digitally encoded security system (D.E.S.S.)
7. Lubrication system
8. 3D RAVE
9. Fuel pump
10. Electrical accessories.

The ECM features a monitoring system that self-diagnoses its electronic components. For more information, refer to *DIAGNOSTIC FAULT CODES* subsection.

Electrical power distribution is also controlled by the ECM. Refer to *POWER DISTRIBUTION* subsection.

Engine Control Module (ECM)

The ECM reads the inputs and makes computations by comparing them to pre-determined parameters, and sends the required control signals to the outputs to ensure proper engine management.

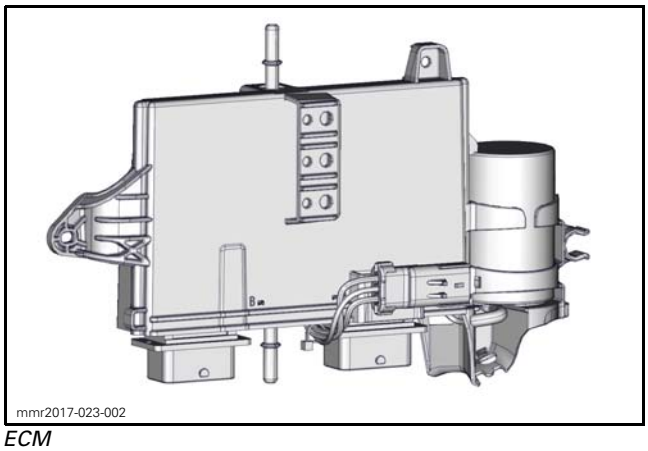

ECM

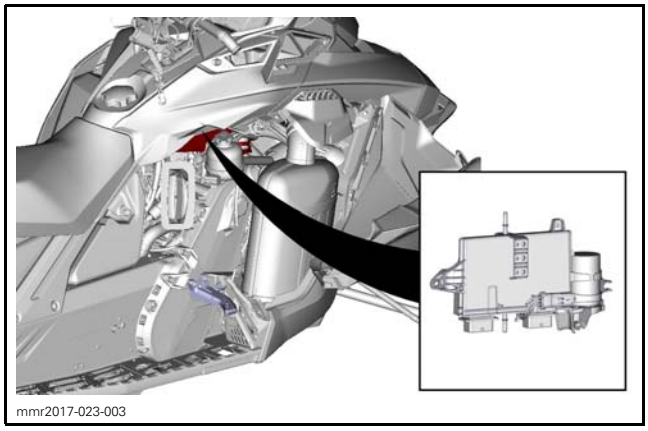

The ECM features a permanent memory that will store fault codes, customer information and other engine information when the engine is stopped.

ECM Cooling

Since the ECM manages all the vehicle's power needs as it incorporates the voltage regulator / rectifier and other power components, a lot of heat needs to be dissipated.

To ensure adequate heat dissipation, a constant fresh fuel flow from the fuel pump is used to cool down the ECM.

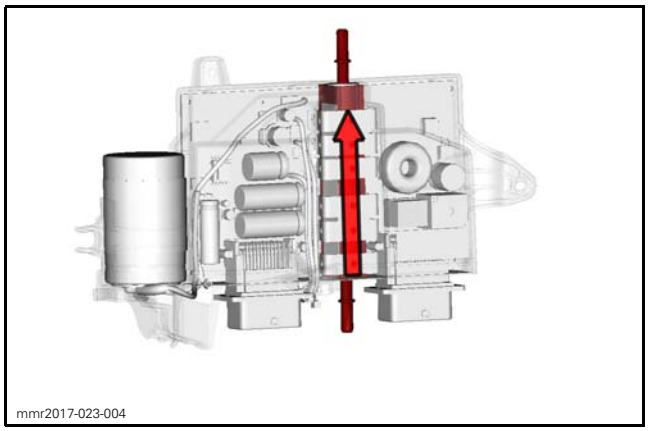

ECM COOLING (FUEL FLOW DIRECTION)

SYSTEM FEATURES

Throttle Protection

If the throttle is not completely closed during engine startup, engine RPM will be limited to idle speed by the ECM.

To revert to normal operation, release the throttle completely and then depress it again.

Warm-Up Protection

The engine's RPM is limited until the desired engine and injection oil temperatures are obtained.

WARM-UP PROTECTION	ENGINE WARM-UP TEMPERATURE
850 E-TEC	20°C to 30°C (68°F to 86°F)

Engine Warm-Up

During the engine warm-up period, the RAVE valves will be limited to the MID position which, limits the engine to a maximum of 7500 ± 200 RPM.

Injection Oil Warm-Up

The injection oil warm-up period is based on oil viscosity.

This is accomplished by measuring the time it takes for the electric oil pump to complete a stroke (oil pump switch signal) from the time at which is was commanded. This provides an indication of the oil viscosity, and therefore temperature and flow capacity.

This function will limit engine speed to 5500 - 7500 RPM depending on detected oil viscosity.

This function may remain active for up to 10 - 15 minutes.

Automated Engine Oil Fogging

An automated engine oil fogging has been implemented to automatically inject the required oil to protect the engine during vehicle storage. Refer to *STORAGE PROCEDURE* subsection for details.

CONTROLLER AREA NETWORK (CAN)

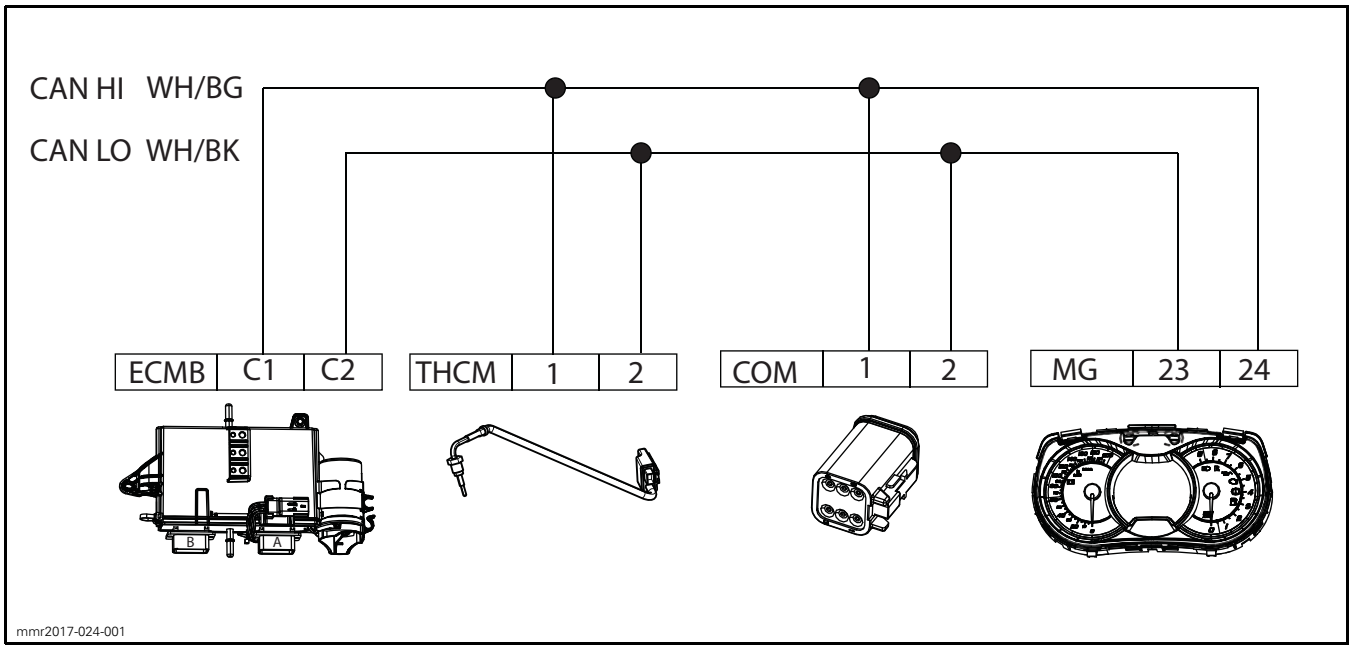

COM (Diagnostic connector)
ECM (Engine control module)
MG (Multifunction gauge)
THCM (Thermocouple module)
WH/BG (White/beige)
WH/BK (White/black)

GENERAL

CONTROLLER AREA NETWORK (CAN)

The CAN protocol is an ISO standard for serial data communication.

The ECM forms a network with other components linked with the CAN bus.

The CAN bus (or CAN lines) consist of a pair of wires (WHITE/BEIGE and WHITE/BLACK) that connect every component to each other. The electronic modules are in constant communication within the network.

There are resistors on the CAN lines in the ECM, multifunction gauge and the thermocouple module.

CAN network resistance can be measured from the COM connector pins.

TROUBLESHOOTING

CAN COMMUNICATION PROBLEMS

1. Measure CAN network resistance from the COM connector pins.
2. Disconnect modules one by one and observe change in network resistance to find network communication fault.

NOTE: Disconnect THCM last.

CAN NETWORK RESISTANCE	
CONDITION	SPECIFICATION ± 10%
Good network or THCM fault	60 Ω
ECM or MG network fault	120 Ω

CAN NETWORK RESISTANCE	
CONDITION	SPECIFICATION ± 10%
ECM and MG network fault	above 1 MΩ
ECM, MG, and THCM network fault	O.L.
1 MΩ = 1,000,000Ω	

If the resistance does not vary when a module is unplugged ensure wiring harness and pins are in good condition before replacing a module.

NOTE: There is no resistor in the COM connector.

COMMUNICATION TOOLS

SERVICE TOOLS

GENERAL

Refer to the **B.U.D.S. directory** on *KNOWLEDGE CENTER* for all BUDS related information, including:

- Download link
- User manual (programming keys, reading fault codes, navigation through menus, writing data to modules etc.)
- Installation instructions.

Download and install the software on a PC.

Connect the vehicle to the BRP diagnostic software (BUDS2).

REQUIRED TOOLS

MANDATORY TOOLS	
A personal computer (laptop or desktop)	
MPI-2 INTERFACE CARD (P/N 529 036 018) **OR** MPI-3 INTERFACE CARD (P/N 529 036 353)	 
DIAGNOSTIC CABLE (P/N 710 000 851)	
POWER INTERFACE (P/N 515 177 223)	
12 V BATTERY SUPPLY CABLE (P/N 529 035 997)	
OPTIONAL TOOL	
Extension cable available at electronic retail outlets. Do not exceed 7.5 m (25 ft)	

Multi-Purpose Interface Card (MPI-2 or MPI-3)

The Multi-Purpose Interface (MPI) in conjunction with the diagnostic cable is used with BUDS2 to communicate with the engine control module (ECM) and other modules.

The MPI card uses the power from the PC computer's USB port.

Power Interface

The power interface and power supply cable allows the connection of a fully charged external battery to provide stable voltage to the unit and BUDS2.

Stable voltage is essential to prevent update crashes.

Do not use a charger on the battery (unit or external) during software updates.

The power interface and power supply cable connected to external battery can be used for extended diagnostic time.

mbs2018-006-002

TYPICAL

The power interface with or without the power supply cable will keep the unit powered even if the ignition switch is turned off or the D.E.S.S. key is removed.

The power interface has a fuse protected voltmeter included and an extra fuse to protect from polarity inversion of the power supply cable.

TROUBLESHOOTING

Refer to the BRP BUDS chart to ensure you are using the appropriate hardware and tools.

COMMUNICATION PROBLEMS

MPI Connection Troubleshooting

MPI Status Lights

The MPI includes 2 status lights to show the connection conditions: USB and CAN. **Both lights must be GREEN** for the MPI to function properly. Otherwise, refer to the following charts.

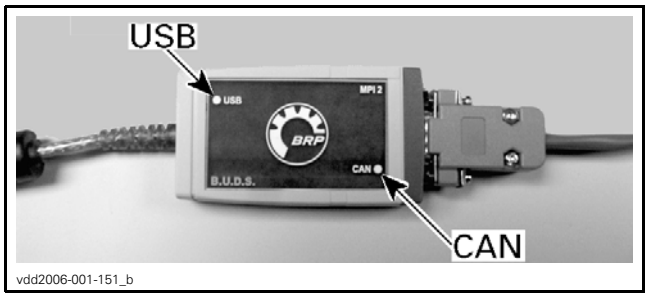

MPI-2 CARD

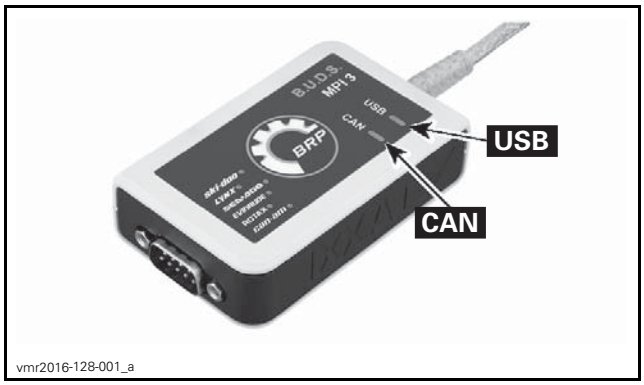

MPI-3 CARD

Prerequisite for USB Communication:

– PC Computer turned ON
– MPI connected to PC computer.

COMMUNICATION PROBLEM (USB)	
STATUS	WHAT TO DO
USB Light is OFF	– Check USB connection between MPI-2 and PC computer. – Check USB operation on PC computer (hardware or Windows drivers).
USB Light is GREEN	– Connections are GOOD. Communication can take place on USB side.

Prerequisite for CAN Communication:

1. MPI connected to diagnostic connector.
2. The tether cord cap (D.E.S.S. key) is installed on the engine cut-off switch and pull the emergency stop switch.
3. B.U.D.S. started and logged.
4. ECM is powered.

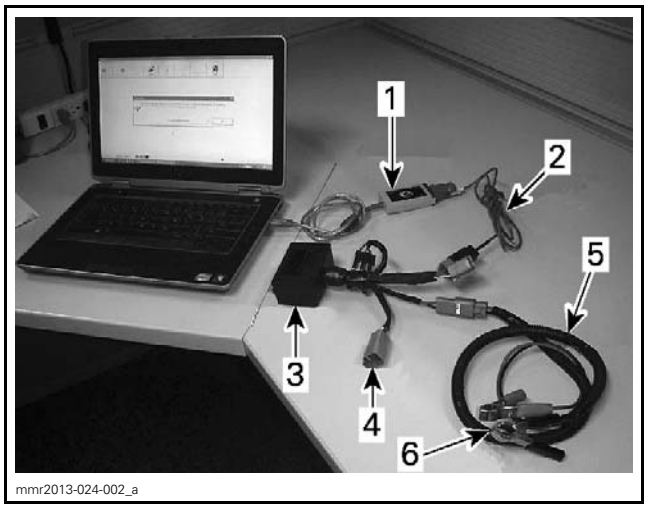

1. *MPI Interface card*
2. *Diagnostic cable*
3. *Power interface*
4. *To vehicle diagnostic connector*
5. *12 V battery supply cable*
6. *To 12 V battery*

NOTE: The battery supply cable is only necessary on models without a battery.

COMMUNICATION PROBLEM (CAN)	
STATUS	WHAT TO DO
CAN Light is OFF	– B.U.D.S. does not communicate with the vehicle. – Check connections from computer to vehicle. – Check if B.U.D.S. is started. – Check if vehicle is powered: is cluster turned ON. If it is not ON, install the tether cord cap (D.E.S.S. key) on the engine cut-off switch and pull the emergency stop switch.
CAN Light is RED	This occurs when B.U.D.S. looses communication with vehicle. – Check connections from computer to vehicle. – Check if vehicle is powered: is cluster turned ON? If not, install the tether cord cap (D.E.S.S. key) on the engine cut-off switch and pull the emergency stop switch.
CAN Light is GREEN	– Connections are GOOD. B.U.D.S. communicates normally with the vehicle.

Power Interface Test

When the power interface is connected to the vehicle diagnostic connector and the emergency stop switch is pulled, the multifunction gauge and the headlight should turn on. If any test failed, check the following and repair or replace power interface.

1. Set the emergency stop switch to run position.
2. Power interface fuses.

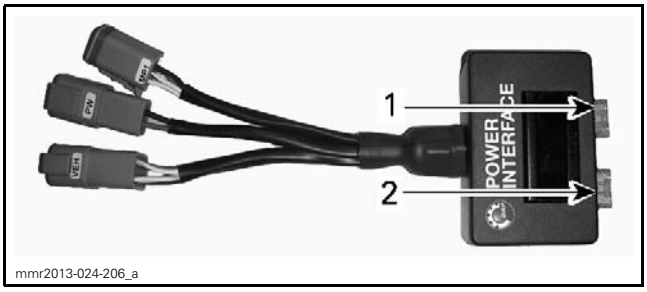

1. Fuse 1
2. Fuse 2

3. External battery voltage should be displayed on Power interface (primary voltage if engine running).
   3.1 Ensure battery charge is high enough to keep the vehicle ON for the duration of the maintenance.

NOTE: This is especially IMPORTANT if you are updating vehicle software. In case of doubt, charge battery for at least 15 minutes; disconnect charger prior to updating software.

DIAGNOSTIC AND FAULT CODES

GENERAL

MONITORING SYSTEM

The ECM features a monitoring system that self-diagnose its electronic components.

When a predefined condition (engine overheat for example) or a fault occurs, the ECM sends a signal to the multifunction gauge and/or audible signals to a beeper to inform you of this particular condition.

The ECM monitors the following functions and components.

COMPONENT
ECM, TPS, CTS, CPS, KS, RAVE valve solenoids, MAPTS, RPS, ignition coils, fuel injectors and THCM (EGTSm and EGTStp)
12 volts under/over voltage 60 volts under/over voltage
D.E.S.S.
RER
Low oil level, electronic oil injection pump
Oil temperature (end of piston stroke feedback from electronic oil injection pump)
Engine RPM
CAN
Fuel pump

Limp Home Mode

The ECM may automatically set default parameters to ensure the adequate operation of the vehicle if a component of the engine management system is not operating properly.

NOTE: Sensor failures will not automatically result in limp home mode. The appropriate fault code will turn on and in some cases the beeper will sound.

The engine RPM may be limited if some critical components fail. In this case, releasing the throttle and letting the engine return to idle speed may allow normal operation to come back. If it does not, try removing and reinstalling the tether cord cap (D.E.S.S. key) on the engine cut-off switch.

These performance-reduced modes allow the rider to continue on to seek help, or return home, which would otherwise not be possible.

ECM ACTION	CAUSE
Engine is gradually stopped. Continuous fast short beeps and a shutdown message is displayed in multifunction gauge until shutdown.	Fuel pump wiring short circuit to ground or open circuit.
	Fuel pump current requirement is too high.
	Engine idle overheat protection: – Engine idled more than 5 seconds after engine temperature increased above 95°C (203°F). – Engine idled more than 5 minutes after engine temperature increased above 37°C (99°F).
Engine speed is limited to 2500 RPM.	D.E.S.S. key is not recognized by the ECM. The antitheft system is active. RAVE valves are kept at closed position.
Engine speed is limited to 5500 RPM (RAVE valves are kept closed).	Oil injection pump wiring shorted to ground or open circuit.
	Low voltage in the 55 Vdc system. Voltage dropped by 5 V.
	ECM overheat (85°C (185°F)). Engine overheat (100°C (212°F) and above).
	Exhaust gas temperature too high (800°C (1,472°F) and above).
	High engine detonation.
Engine speed is limited to 7000 RPM.	Max. RPM allowed to the engine in reverse. RAVE valves are kept closed.
Engine speed is limited (Variable limit)	Max. RPM allowed varies when engine is cold, according to oil viscosity
Engine speed is limited to 8600 RPM.	Maximum engine RPM allowed.

Pilot Lamps and Beep Codes

Warning lights in the multifunction gauge and/or a beeper provide signals as to a vehicle operation feedback, or to indicate a problem.

A pilot lamp can flash alone or in combination with another lamp.

Beeper codes will be heard and messages (depending on gauge model) will be displayed to attract your attention and inform you of the situation.

DIAGNOSTIC FAULT CODES (DTC)

A fault code is an indication that a glitch or malfunction is detected by the monitoring system of the vehicle.

When there is a problem, the ECM can provide fault codes to ease troubleshooting.

The faults registered in the ECM are stored in memory.

IMPORTANT: After a problem has been solved, be sure to clear the fault(s) in the ECM using the BUDS2 software. This will properly reset their states.

How to Read Fault Codes Using BUDS2 Software

Refer to *COMMUNICATION TOOLS AND B.U.D.S.* subsection.

For more information pertaining to the faults code status and report, refer to B.U.D.S. online help.

How to Read Fault Codes on the Multifunction Gauge

Same gauges can display fault codes.. Refer to the applicable *GAUGE* subsection.

How to Find Fault Code Descriptions

Connect BUDS2 to the vehicle. Refer to *COMMUNICATION TOOLS AND BUDS* subsection.

Navigate to the faults page in BUDS2.

Browse lists of active/occurred and inactive fault codes.

FUEL TANK AND FUEL PUMP

SERVICE TOOLS

Description	Part Number	Page
LEAK TEST KIT	529 033 100	91
OETIKER PLIER	295 000 070	94
PRESSURE GAUGE	529 036 395	92
SMALL HOSE PINCHER	295 000 076	91
T FITTING FUEL PRESSURE	529 036 509	92
VACUUM/PRESSURE PUMP	529 021 800	91

16 in Track

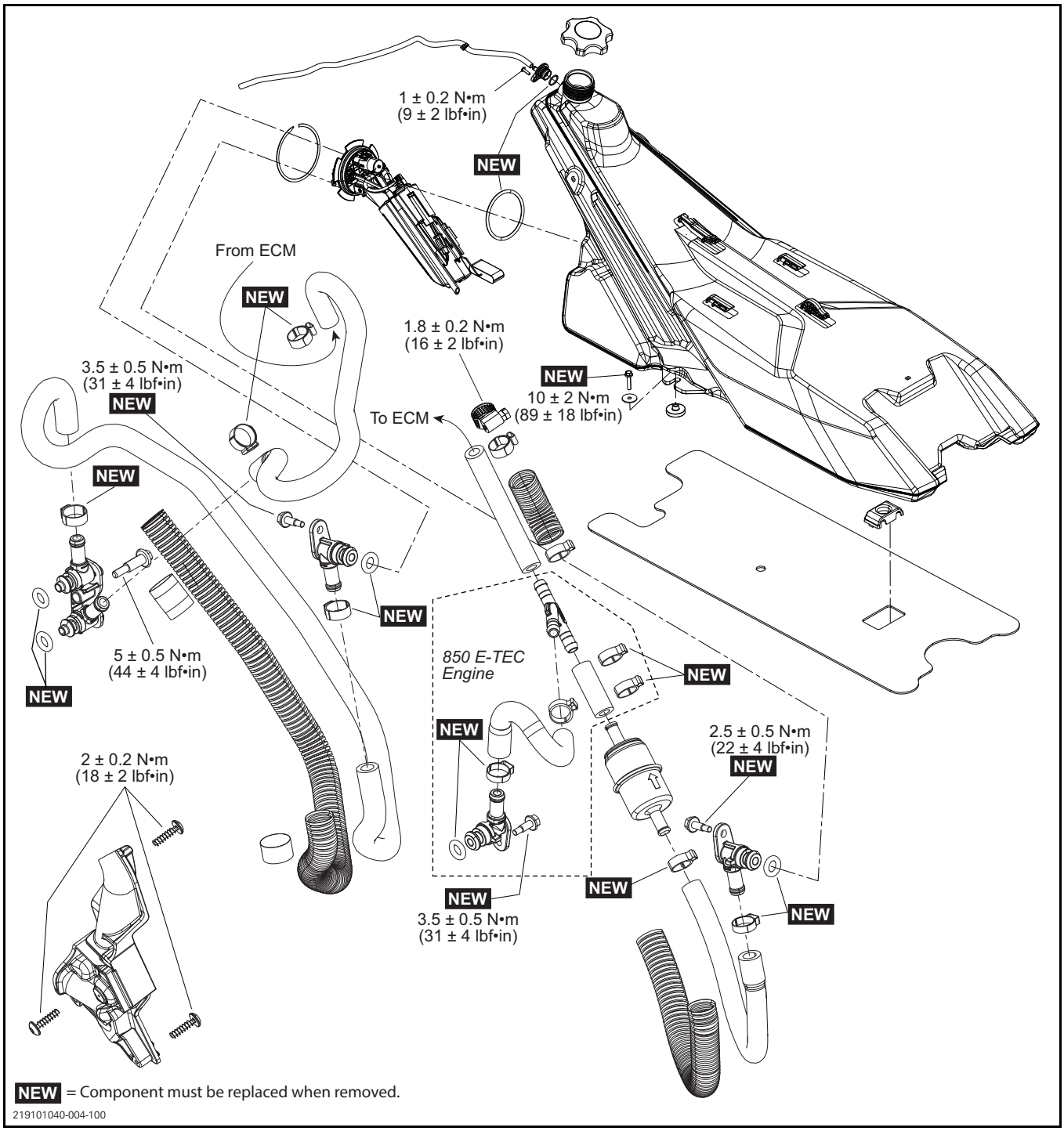
1 ± 0.2 N•m
(9 ± 2 lbf•in)
NEW
From ECM
NEW
1.8 ± 0.2 N•m
(16 ± 2 lbf•in)
3.5 ± 0.5 N•m
(31 ± 4 lbf•in)
NEW
NEW
10 ± 2 N•m
(89 ± 18 lbf•in)
To ECM
NEW
NEW
5 ± 0.5 N•m
(44 ± 4 lbf•in)
NEW
850 E-TEC
Engine
NEW
NEW
2.5 ± 0.5 N•m
(22 ± 4 lbf•in)
NEW
2 ± 0.2 N•m
(18 ± 2 lbf•in)
NEW
NEW
NEW
3.5 ± 0.5 N•m
(31 ± 4 lbf•in)
NEW = Component must be replaced when removed.
219101040-004-100

20 and 24 in Track

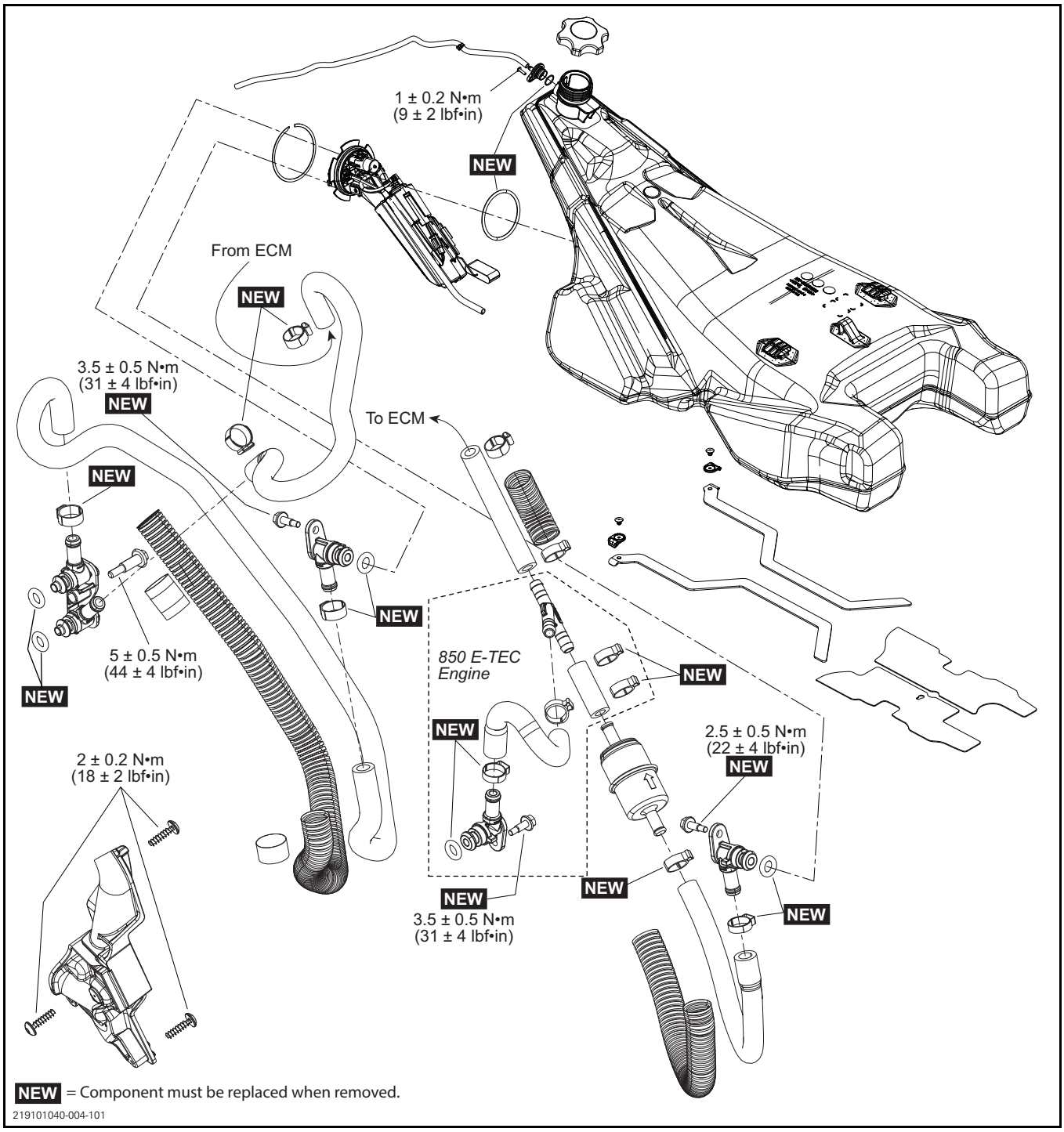

GENERAL

NOTE: It is a good practice to check for fault codes using the BRP diagnostic software BUDS2 as a first troubleshooting step. Refer to *DIAGNOSTIC AND FAULT CODES*.

⚠ WARNING

Always disconnect the magneto connector prior to:
– Disconnecting any fuel hose.
– Removing a fuel injector.
– Removing a spark plug cable or spark plug.
Otherwise, if the engine is cranked, fuel vapors may ignite in presence of a spark creating a fire hazard.

When disconnecting a fuel line, cover the connection with an absorbent shop rag and proceed slowly to minimize spilling.

⚠ WARNING

Do not allow fuel to spill on hot engine parts and/or on electrical connectors. Wipe off any fuel spillage in the engine compartment. Fuel is flammable and explosive under certain conditions.

⚠ WARNING

After working on the fuel system, always carry out a fuel system pressurization test to check for leaks.

⚠ WARNING

Never remove the eyelet connectors from the fuel pressure regulator and the fuel hose connector. A bad connection may create a static electricity discharge causing a fire hazard.

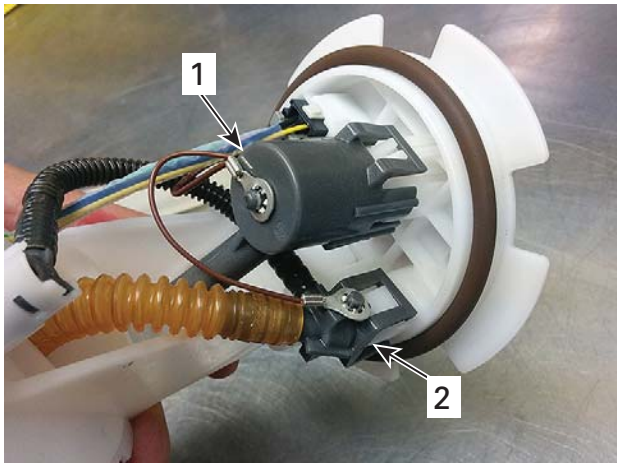

tmr2017-027-306_a

1. *Fuel pressure regulator*
2. *Fuel hose connector*

SYSTEM DESCRIPTION

Electric Fuel Pump


mmr2017-027-002

An electric fuel pump is mounted in the front center portion of the fuel tank.

A 12 Vdc high pressure fuel pump with an integrated jet pump is used.

NOTE: Although the fuel pump is connected to the 55 Vdc system, the ECM modulates the voltage (Pulse Width Modulation) between 9 and 16 Vdc depending on the engine RPM. The fuel pump output will change as voltage changes.

As soon as the engine is cranking, the electric fuel pump turns on in preparation for the engine start. When the engine runs, the fuel pump is ON continuously to provide a constant fuel pressure to the injectors.

To ensure a constant delivery of fuel to the engine for all riding conditions when the fuel level is low, a rear pickup and a fuel pump reservoir is used.

The fuel pump reservoir is actually the housing of the fuel pump module in which the fuel pump is located. A check valve at the bottom of the housing allows the fuel in the tank to enter the fuel pump reservoir.

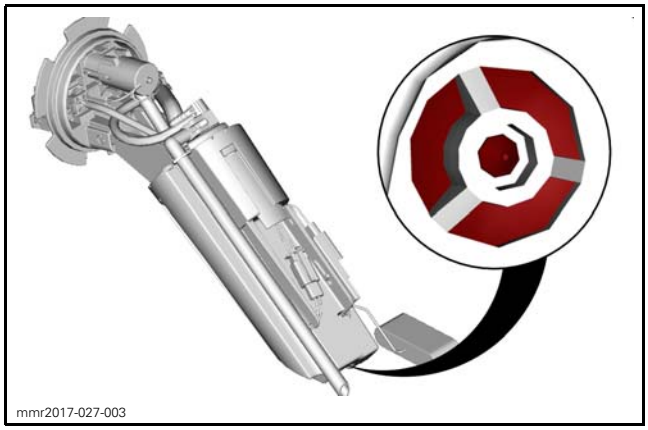

When the fuel pump runs, it draws the fuel from the fuel pump reservoir and feeds it to the injection system. This causes fuel in the tank to enter the fuel pump reservoir, by gravity, through its bottom inlet check valve.

At the same time, a portion of the fuel flow from the electric fuel pump flows through a jet pump that contains a venturi.

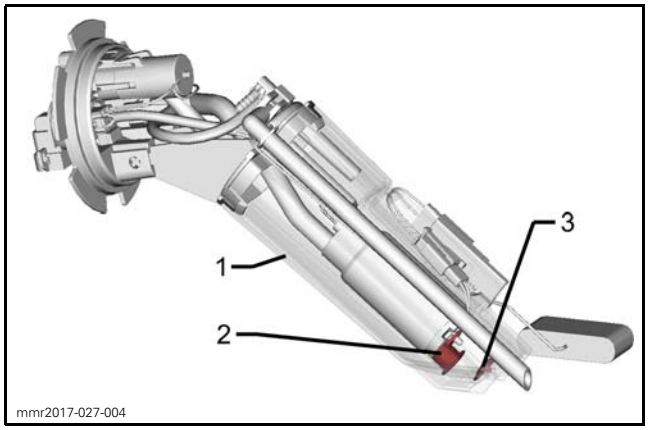

TYPICAL - VIEW INSIDE FUEL PUMP RESERVOIR
1. *Fuel pump reservoir*
2. *Bottom inlet*
3. *Check valve (open upwards)*

As the fuel accelerates through the venturi, it generates a low pressure area at a connection to the remote pickup, which draws fuel into the fuel pump reservoir from the remote pickup.

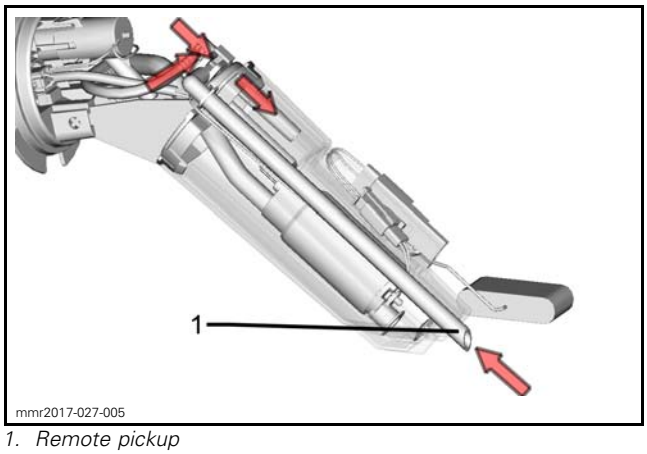

1. *Remote pickup*

When riding the vehicle on a level surface, fuel enters into the fuel pump reservoir through its check valve and through the remote pickup simultaneously, as long as there is enough fuel in the tank to cover the remote pickup.

When riding downhill with a low amount of fuel in the tank, the fuel moves towards the front of fuel tank. The fuel enters the fuel pump reservoir through the check valve only as there is no fuel at the remote pickup.

When riding uphill with a low amount of fuel in the tank, the fuel moves towards the rear of the fuel tank. The check valve closes and traps the fuel in the pump reservoir. The fuel pump continues to draw fuel from the fuel pump reservoir, which is now only fed by the jet pump using the remote pickup. This prevents air from being drawn into the fuel lines from the fuel tank.

The continuous fuel flow cools down the fuel pump, the injectors and the ECM. To cool these components, the fuel circulates as follows:
- Out of fuel pump
- Through the ECM
- To the direct injectors (around the voice coils)
- Through the pressure regulator
- Back to fuel tank.

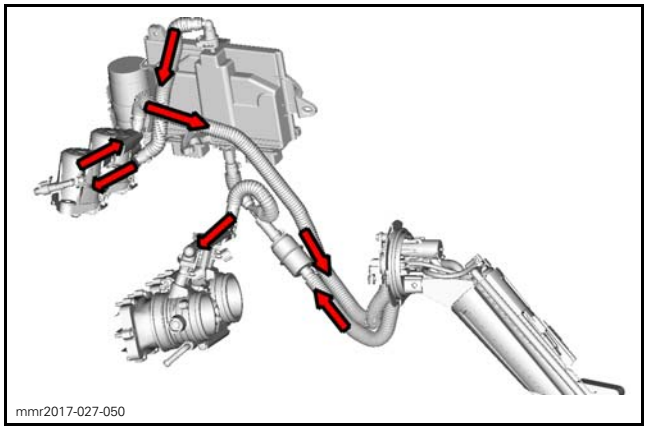

Fuel Pickup

Fuel enters the fuel pump reservoir from either a check valve at the bottom of the fuel pump reservoir, or from a remote pickup in the rear portion of the fuel tank.

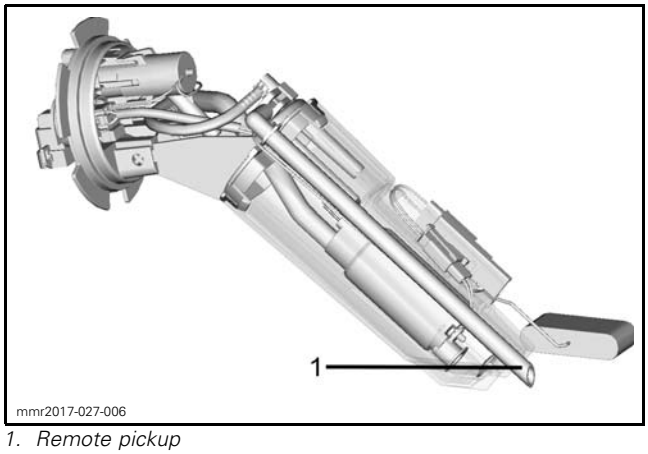

1. Remote pickup

Fuel Pressure Regulator

An integrated fuel pressure regulator is mounted on the fuel pump flange. It is basically a spring loaded valve that opens and closes the path of fuel returning to the tank, thus maintaining a constant fuel pressure in the system.

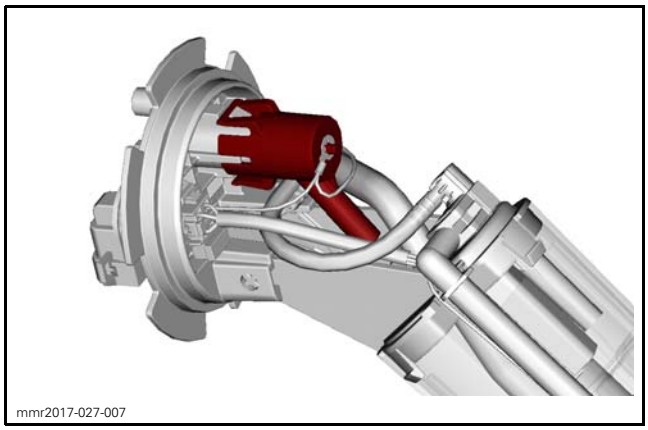

FUEL PRESSURE
Approximately 303 kPa (44 PSI) at 2000 RPM (will be lower at idle)

Fuel pressure should drop less than 35 kPa (5 PSI) when engine stops running.

If a leak is present, pressure will continue to drop within the first minute after engine stops running.

Fuel Tank Vent

The fuel tank is vented through a combination type check valve that allows ambient air pressure to enter fuel tank at all times.

As fuel is consumed by the engine, a negative pressure would occur in the fuel tank. This could eventually prevent the fuel pump from drawing enough fuel. The **negative pressure relieve function** of the valve allows the higher outside air pressure in.

If pressure builds up and exceeds 2.0 kPa to 4.8 kPa (.3 PSI to .7 PSI) in the fuel tank, the check valve opens and lets the excess pressure vent out of the tank.

Fuel Filters

Fuel Pump Pre-Filter

A fuel pump pre-filter is used at the electric fuel pump inlet. It is a replaceable nylon mesh filter located within the fuel pump module housing (fuel pump reservoir).

The fuel pump pre-filter protects the fuel pump and prevents clogging of the fuel passages within the fuel pump module.

In-Line Fuel Filter

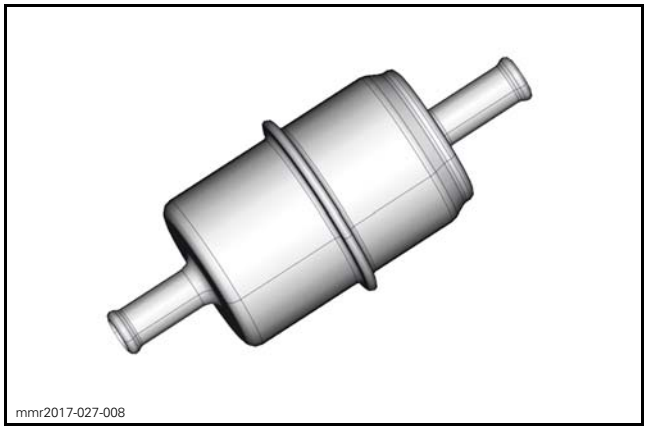

An in-line filter on the supply side is located between the fuel pump and the ECM.

It is a replaceable metallic canister type filter used to deliver dirt-free fuel to the injectors.

Fuel Level Indication

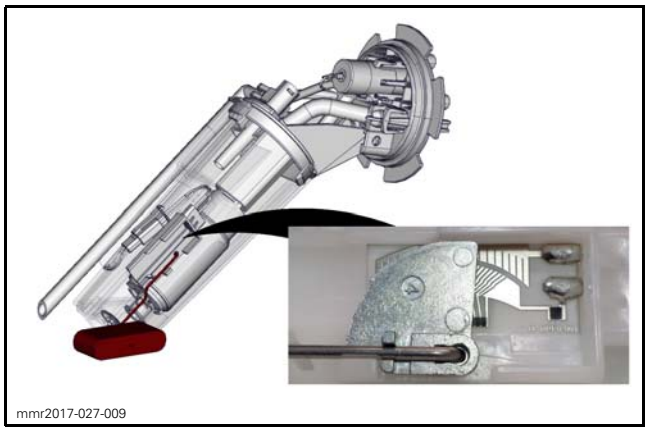
mmr2017-027-009

A float type fuel level sensor varies its resistance with fuel level thus providing a signal to the multifunction gauge for fuel level indication.

INSPECTION

INSPECTING THE FUEL LINES AND CONNECTIONS

Visually inspect fuel lines and connections for cracks or leaks.

TESTING FUEL SYSTEM FOR LEAKS

Activate the fuel pump from the **Functions** page in BUDS2.

Check for fuel leaks.

⚠ WARNING

After working on the fuel system, carry out a fuel system pressurization test to check for leaks. Failure to carry out a fuel system pressurization test could result in severe injury or a life threatening situation should a leak occur.

TESTING FUEL TANK FOR LEAKS

REQUIRED TOOLS	
SMALL HOSE PINCHER (P/N 295 000 076)	
LEAK TEST KIT (P/N 529 033 100)	
VACUUM/PRESSURE PUMP (P/N 529 021 800)	

1. Fill up fuel tank.
2. Open the left side panel to access the fuel vent tube.
3. Install a hose pincher on the vent tube.

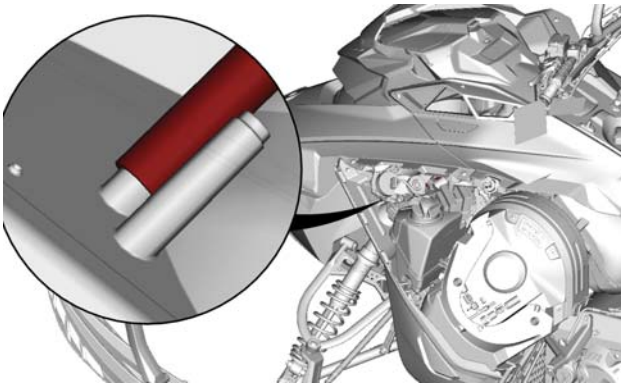
mmr2017-027-010

4. Install the appropriate test cap from the leak test kit on fuel tank inlet.
5. Install the pressure pump on pressure test fuel cap.

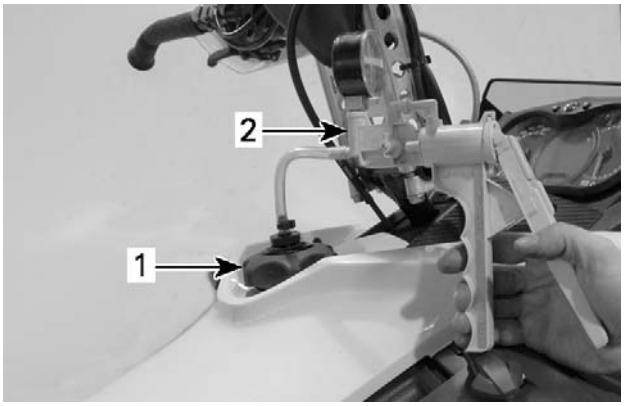

mbg2008-011-063_b

TYPICAL
1. *Pressure test fuel cap*
2. *Vacuum/pressure pump*

6. Set pump selector to pressure.
7. Pressurize fuel tank as follows.

PRESSURE	TIME WITHOUT PRESSURE DROP
21 kPa (3 PSI)	3 minutes

If pressure drops, locate fuel leak(s) and repair or replace leaking component(s).

To ease locating leak(s), spray soapy water on components; bubbles will indicate leak location(s).

Fuel Tank Vent Valve Test

1. While the fuel tank is still pressurized as in the previous test, carry out the following:
2. Place a finger over the vent hose outlet.
3. When removing hose pincher, alternately touch and release vent hose outlet. You should feel pressurized air flowing out indicating the pressure relief valve function is working.
4. Release any remaining pressure in the fuel tank by slowly unscrewing fuel tank cap.
5. Remove the pressure test fuel cap.
6. Remove the fuel tank vent tube from its fitting on the lower left front body panel.
7. Install the pressure pump on the vent tube and apply air pressure through the vent valve. Air must flow freely towards the fuel tank neck.

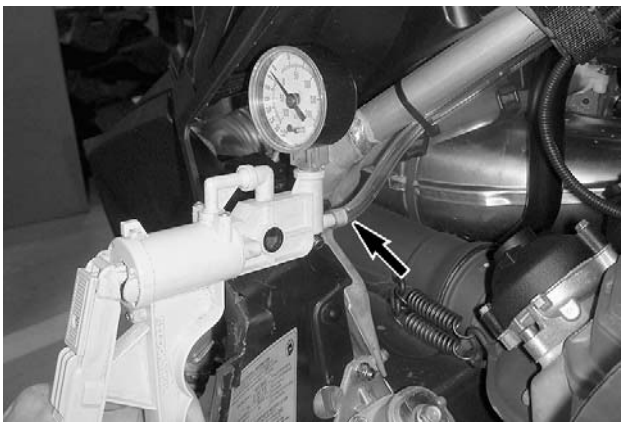

mmr2008-030-002_a

TYPICAL - VACUUM/PRESSURE PUMP ON VENT TUBE

NOTE: If fuel vent check valve does not function as indicated in test, replace vent valve.

8. Remove vacuum/pressure pump.
9. Install vent tube on its fitting.
10. Install normal fuel tank cap.

TESTING THE FUEL PRESSURE

REQUIRED TOOLS	
PRESSURE GAUGE (P/N 529 036 395)	
T FITTING FUEL PRESSURE (P/N 529 036 509)	

Open right hand side panel.

Move rewind starter handle assembly (applicable models).

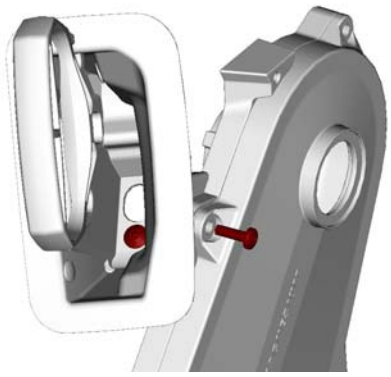

mmr2017-027-050_a

The pressure test provides an indication of the available fuel pressure at the fuel pump outlet. It validates the pressure regulator and the fuel pump.

1. Ensure there is enough gas in fuel tank.
2. Install a rag under the fuel filter to catch the fuel spillage.
3. Remove the fuel filter.

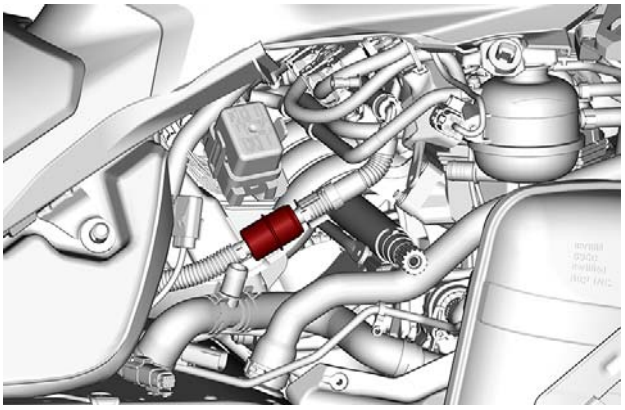

219101015-011-001

4. Install the T fitting tool in place of the fuel filter. Secure with gear clamps.


219101040-012-001

5. Install the pressure gauge on the T fitting tool.

⚠ WARNING

When carrying out pressure test, ensure fuel is not leaking from test equipment onto hot exhaust system or electrical components. Ensure fuel hose do not come into contact with hot engine parts or hot exhaust system.

6. Start engine.
7. Run engine above 2000 RPM and observe the fuel pressure.

FUEL PRESSURE
303 kPa (44 PSI)

If pressure is lower than specified, momentarily block the return hose while monitoring the pressure gauge.

NOTICE **Do not block the fuel return for more than 2 seconds.**

If pressure rises to reach or exceed specification with the fuel return blocked, replace fuel regulator.

If pressure does not rise with the fuel return blocked, refer to *PRESSURE BELOW SPECIFICATIONS* in the following table.

FUEL PRESSURE TROUBLESHOOTING	
RESULT	POSSIBLE CAUSE
Pressure above specifications	Defective fuel regulator

FUEL PRESSURE TROUBLESHOOTING	
RESULT	POSSIBLE CAUSE
Pressure below specifications	Clogged fuel filter
	Poor electrical connection
	Defective fuel regulator
	Defective fuel pump
	Leak in the fuel system circuit

8. Stop engine.

Fuel pressure should remain stable.

9. If fuel pressure drops, check the following for leaks:
   - Tools
   - Hoses
   - Fuel injectors
   - Fuel pressure regulator
   - Fuel pump.
10. Bleed away any remaining fuel in the pressure gauge and fuel hose adapter using the bleed valve on the fuel hose adapter.
11. Remove pressure gauge and fuel hose adapter.
12. Reinstall the fuel pressure hose on ECM . Refer to *REPLACING THE ECM LOWER FUEL HOSE*
13. Reinstall all remaining removed parts.

PROCEDURES

FUEL HOSE AND OETIKER CLAMPS

Replacing Fuel Hoses


mmr2017-027-013

TYPICAL PRE-FORMED FUEL HOSE

When replacing fuel hoses, be sure to use hoses as available from BRP parts department. This will ensure continued proper and safe operation.

⚠ WARNING

Use of fuel lines other than those recommended by BRP may compromise fuel system integrity.

⚠ WARNING

- **Never use a hose pincher on high pressure hoses.**
- **Never change the routing of a fuel hose.**
- **Always reinstall the corrugated protective tubing on fuel hoses.**
- **Secure fuel hoses using the appropriate locking tie or fastener to prevent contact with sharp edges or hot, rotating and moving parts.**
- **After connecting a hose or a quick connect fitting, pull on the hose near the fitting to make sure it is securely locked.**
- **Always validate fuel system tightness by performing a *FUEL SYSTEM PRESSURIZATION AND LEAK TEST*.**

Replacing Oetiker Clamps

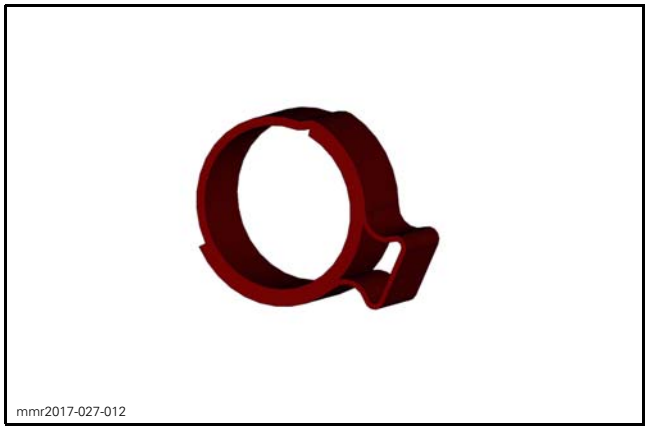

mmr2017-027-012

REQUIRED TOOL	
OETIKER PLIER (P/N 295 000 070)	

⚠ WARNING

Whenever removing a hose in the fuel system, always use new Oetiker clamps at assembly.

REPLACING THE IN-LINE FUEL FILTER

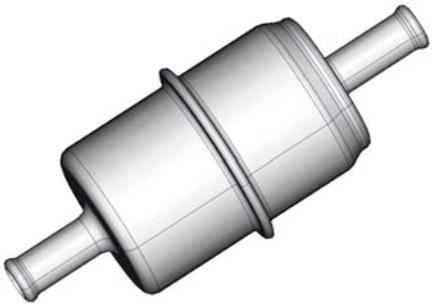

mmr2017-027-008

Removing the In-line Fuel Filter

⚠ WARNING

Work in a well ventilated area. Wipe up all spilled fuel.

1. Release fuel pressure in the system. .
2. Remove the upper body module. Refer to *BODY* subsection.
3. Disconnect magneto connector.

⚠ WARNING

The magneto connector must be disconnected to prevent any spark in the engine compartment and to remove power from the fuel pump. Otherwise, if the engine is cranked, fuel vapors may ignite in presence of a spark creating a fire hazard.

4. Place a rag between fuel filter and oil injection tank.
5. Cut both Oetiker clamps securing the fuel filter.
6. Remove fuel filter from vehicle.

Dispose fuel filter as per your local environmental regulations.

Installing the In-Line Fuel Filter

The installation is the reverse of the removal procedure however, pay attention to the following.

Insert new Oetiker clamps on both hoses.

Install the new filter. Make sure printed arrow pointed towards the ECM.

Secure the fuel filter with Oetiker clamps.

⚠ WARNING

Ensure hose clamp is tight and that hose cannot turn on the fitting.

When installation is complete, carry out a fuel system leak test, refer to *TESTING FUEL SYSTEM FOR LEAKS* in this subsection.

⚠ WARNING

After working on the fuel system, carry out a fuel system pressurization test to check for leaks. Failure to carry out a fuel system leak test could result in severe injury or a life threatening situation should a leak occur.

Reinstall all removed parts.

FUEL TANK

Removing the Fuel Tank

1. Remove seat.

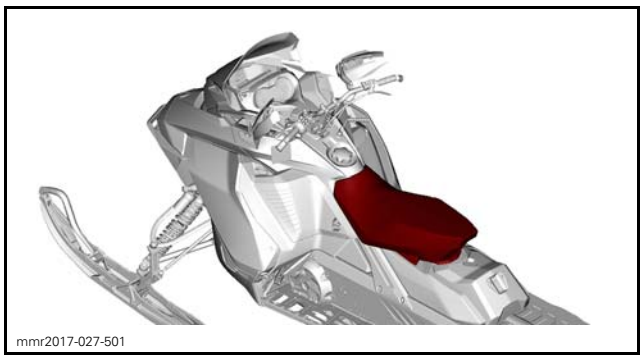

mmr2017-027-501

2. Remove upper body module. Refer to *BODY* subsection.

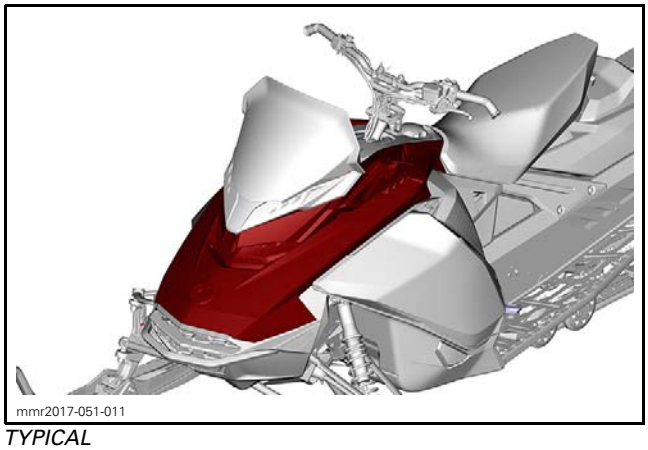

mmr2017-051-011

TYPICAL

3. Remove tank cover.

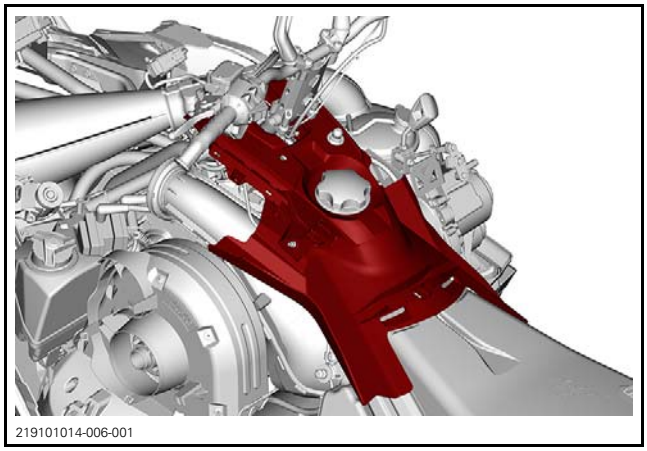

219101014-006-001

4. Remove the battery, if applicable.

16 in Track

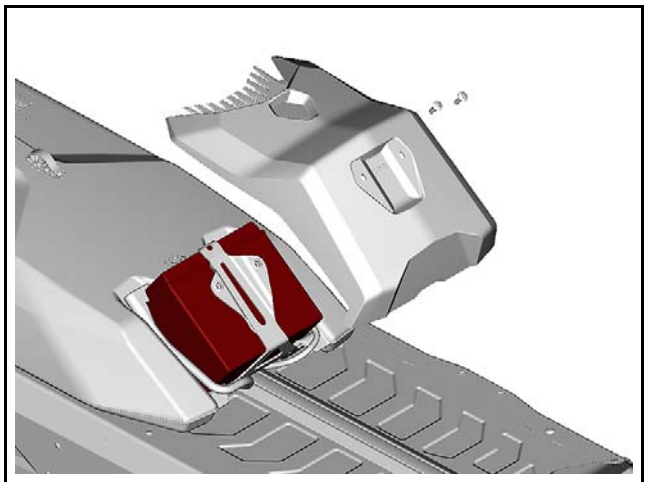

mmr2017-027-506

20 in Track

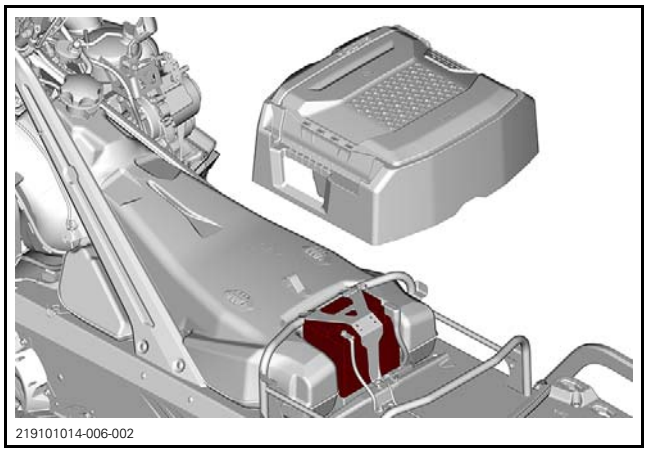

219101014-006-002

All Models

5. Remove rear frame members. Refer to *FRAME* subsection.

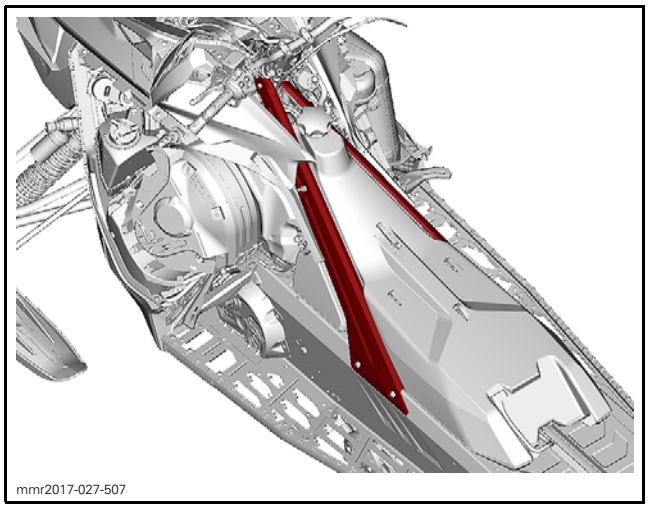
mmr2017-027-507

6. Remove and discard fuel tank retaining screws or rivets.

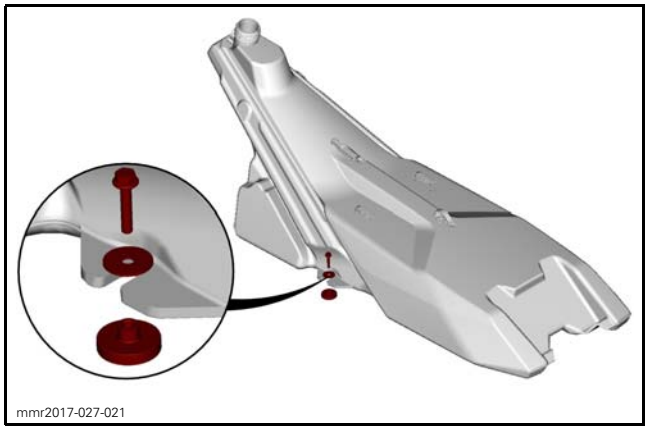
mmr2017-027-021

7. Remove fuel tank vent.

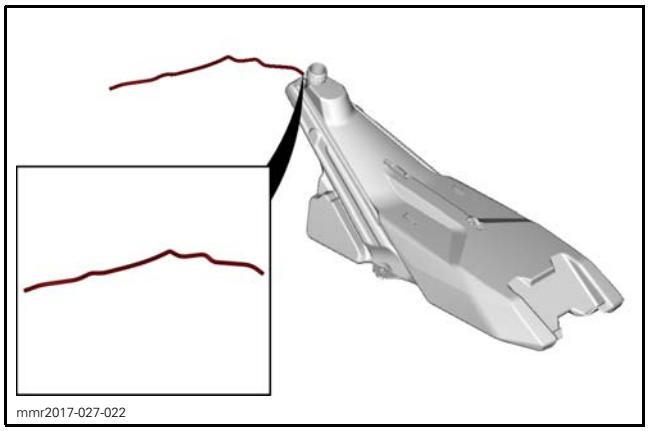
mmr2017-027-022

8. Remove fuel pump electrical connector.

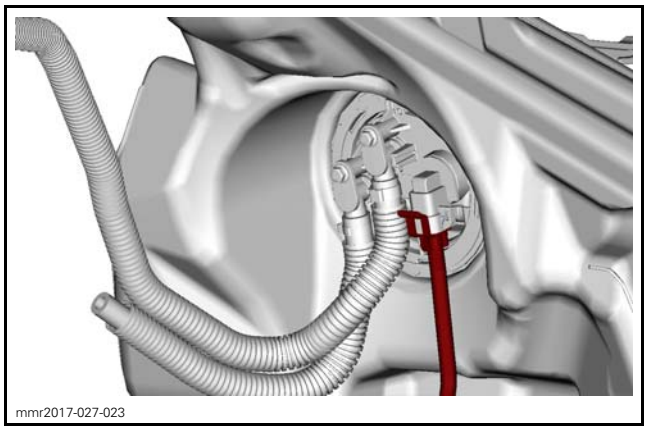
mmr2017-027-023

9. Remove fuel hoses from pump. Discard screws.

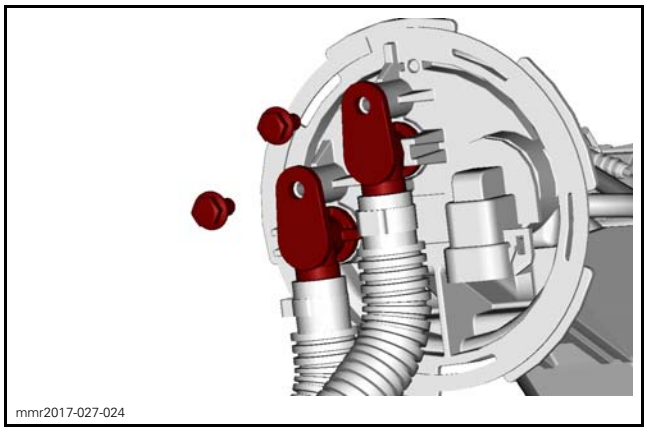
mmr2017-027-024

10. Remove fuel tank.

Installing the Fuel Tank

The installation is the reverse of the removal procedure. However, pay attention to the following.

Refer to appropriate subsections to properly reinstall all removed components.

Pressurize and test fuel system for leaks.

FUEL PUMP

Relieving Fuel Pressure

1. Connect vehicle to BUDS2, refer to the *COMMUNICATION TOOLS* subsection.
2. From the **Functions** page, relieve fuel pressure.

Activating the Fuel Pump with BUDS2

NOTE: Activating the fuel pump as described in this procedure can be used for purging air from the fuel system whenever a fuel hose has been disconnected and reconnected. The pump should be activated for 15 seconds to ensure proper purging of the system.

1. Connect vehicle to BUDS2 software, refer to *COMMUNICATION TOOLS* subsection.
2. From the **Functions** page, activate the fuel pump.
3. Listen for fuel pump operation.

If you do not hear the pump come ON, select the **Faults** tab in BUDS2 and check for fault codes.

If there is no fault code, connect a known good fuel pump to the vehicle harness (in parallel) and repeat the test.

NOTE: No voltage test can be done when the fuel pump is disconnected.

If the second fuel pump functions when connected to the vehicle harness, then replace the fuel pump installed in the vehicle.

Removing the Fuel Pump

1. Remove the fuel tank.
2. Remove fuel pump assembly snap ring from fuel tank.


mmr2017-027-026

3. Remove and discard fuel pump gasket.

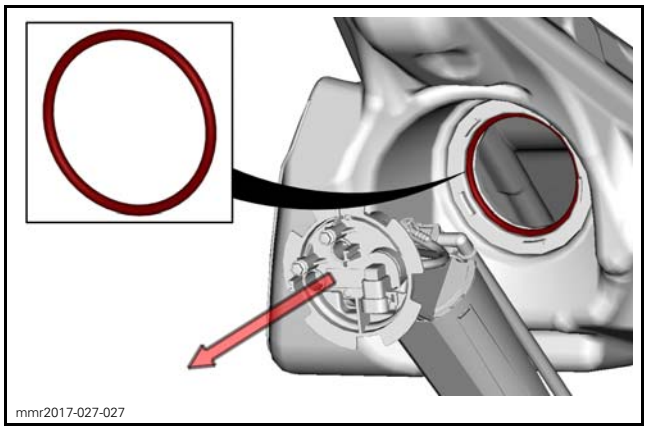
mmr2017-027-027

4. Visually inspect for broken or damaged ground wires, if any issue are found, the module should be replaced.

Installing the Fuel Pump

The installation is the reverse of the removal procedure. However, pay attention to the following.

Make sure the remote pick-up is inserted all the way to the rear of fuel tank and does not interfere with the fuel level sensor float.

Install a NEW gasket on the fuel pump prior to installing the pump in the tank.

Ensure the fuel pump snap ring is fully engaged with the gap on top. Refer to image in removal procedure.

NOTE: The gasket must be installed on the fuel tank side so it is located between the pump and the fuel tank.

Install fuel tank.

⚠ WARNING

After working on the fuel system, carry out a fuel system pressurization test to check for leaks. Failure to carry out a fuel system leak test could result in severe injury or a life threatening situation should a leak occur.

FUEL PUMP INLET FILTER

Replacing the Fuel Pump Inlet Filter

1. Remove fuel pump assembly from fuel tank. Refer to procedure in this subsection.
2. Free the wires of the fuel level sensor of the fuel pump reservoir.

NOTICE **Do not pull / push on wires or metal terminals that connect the grounding wires to the plastic parts. Keep hands and tools away from this area.**

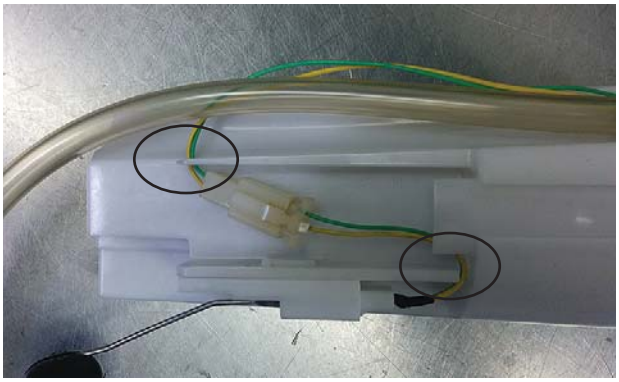

mmr2017-027-300_a

3. Unlock fuel pump reservoir by carefully inserting a small screwdriver between the tab and the fuel pump reservoir.

NOTICE **Do not push directly on tabs or twist the screwdriver.**

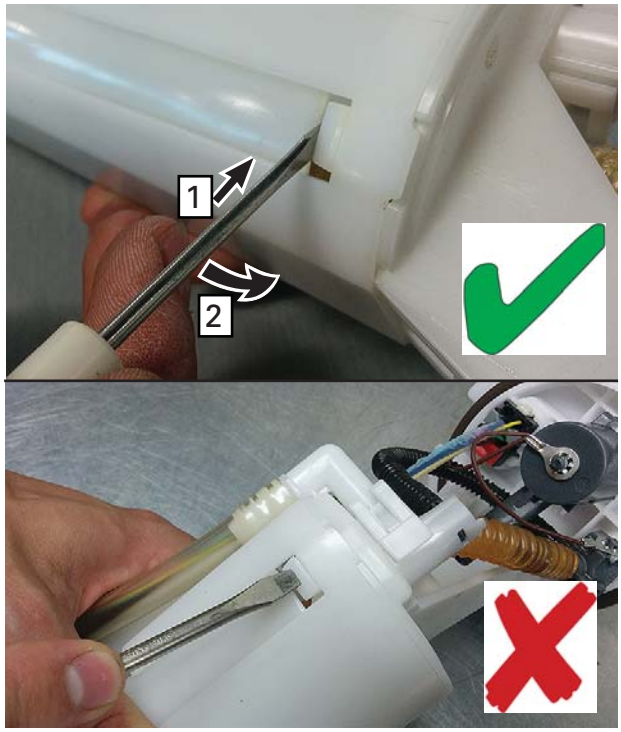

tmr2017-027-307_a

4. Completely remove fuel pump reservoir by pulling it carefully.

mmr2017-027-031

NOTICE **To avoid damaging wires, Pull the reservoir carefully and do not let reservoir hang by wires.**

5. Remove inlet fuel pump filter by pulling on it. If the filter is hard to remove, pry the filter gently using a small screwdriver.

NOTICE **Be careful to avoid scratching the outside diameter of the pump inlet fitting where the filter fits.**

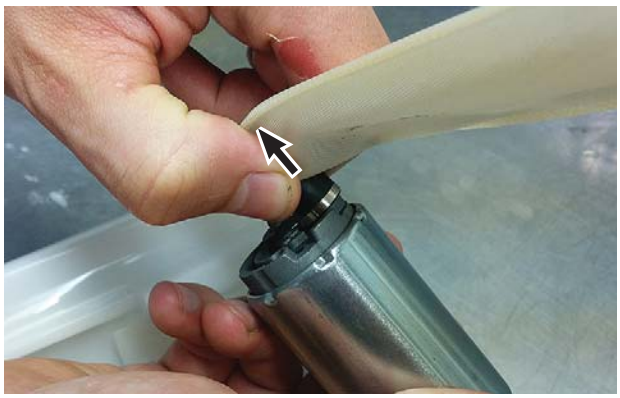

mmr2017-027-302_a

6. Discard inlet fuel pump filter and steel ring.
7. Install new fuel pump inlet filter.
   - 7.1 Insert inlet filter onto fuel pump by pressing it downward.
   - 7.2 Push the filter on until the fitting bottoms out on the pump inlet face, there should be no gap.

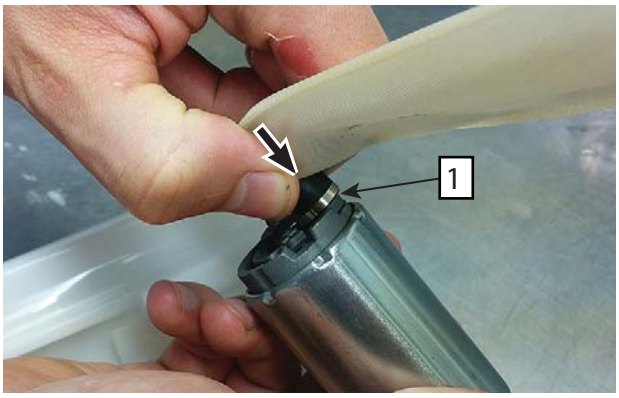

mmr2017-027-600_a

1. No gap here

7.3 Ensure that the filter hole is properly positioned into the pin.

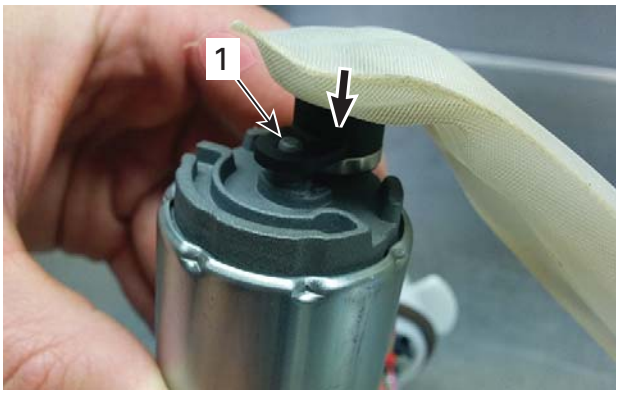

mmr2017-027-303_a

1. Pin

8. Install fuel pump reservoir carefully and ensure that all parts are properly positioned.

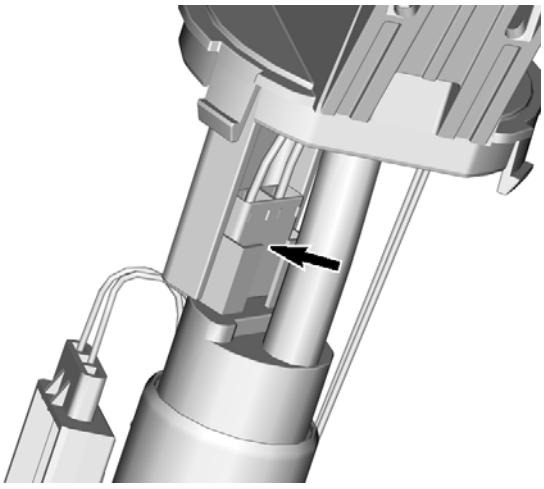

mmr2017-027-700_a

ELECTRICAL CONNECTOR MUST BE IN THIS POSITION

NOTE: Make sure the pump motor is positioned between the molded ribs in the reservoir.

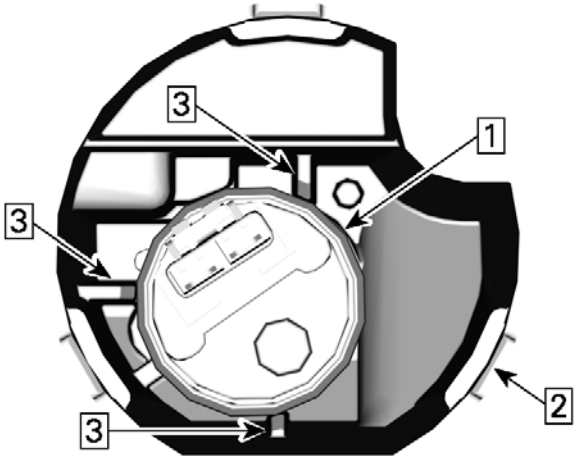

mmr2017-027-702_a

1. Fuel pump motor
2. Reservoir
3. Ribs

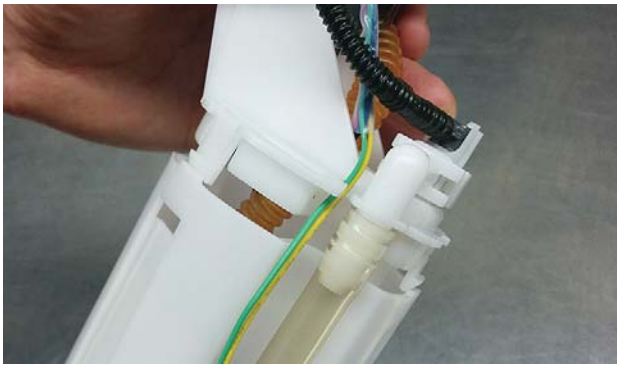

mmr2017-027-304_a

9. Ensure that fuel tank reservoir tabs are properly locked.
10. Route the fuel level sensor wires properly.

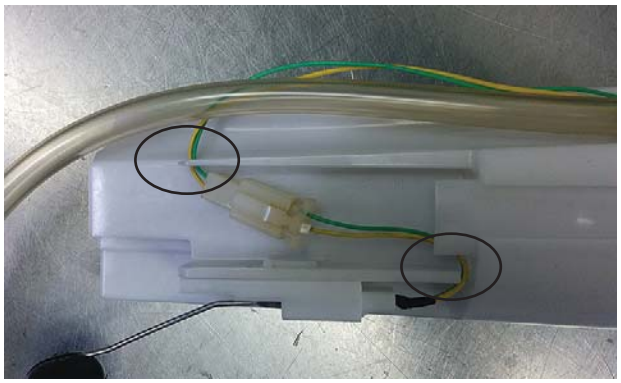

mmr2017-027-300_a

11. Reinstall fuel pump in fuel tank. Refer to procedure in this subsection.

FUEL LEVEL SENSOR

NOTE: Verify the gauge functions related to the fuel level sensor before testing the sensor. Refer to *GAUGE* subsection.

Testing Fuel Level Sensor Resistance

1. Remove fuel pump from fuel tank, refer to *FUEL PUMP* in this subsection.
2. Ensure the fuel level sensor is properly connected in the fuel pump module.
3. Measure the resistance at the fuel pump connector **(FP)**.

FUEL LEVEL SENSOR BENCH TEST		
PROBE	FLOAT POSITION	RESISTANCE
FP- B to FP-D	Empty	95 Ω ± 5 Ω
	Full	9 Ω ± 2 Ω

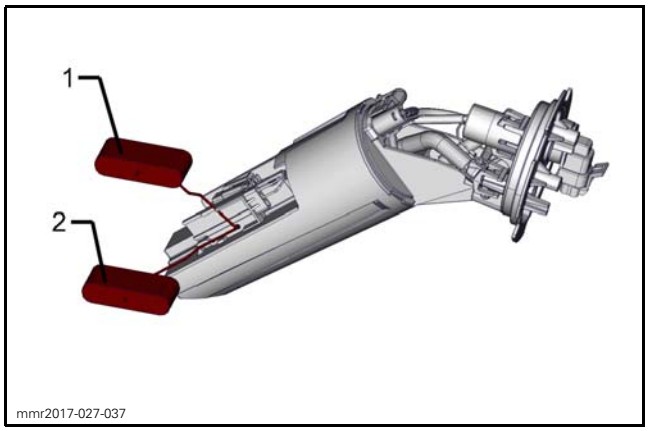

TYPICAL FUEL PUMP FLOAT
1. Full position
2. Empty position

4. When fuel level sensor travels from full to empty or vice-versa, there should be a constant linearity to the resistance readings. Any spike or drop of resistance indicates a "flat spot" in the fuel level sensor circuitry.

If fuel level sensor fails bench test, replace the fuel level sensor.

Replacing the Fuel Level Sensor

1. Remove the fuel pump.

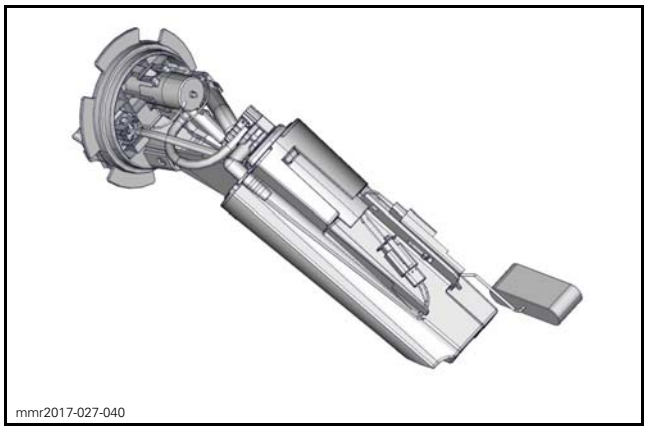

2. Disconnect fuel level sensor connector.

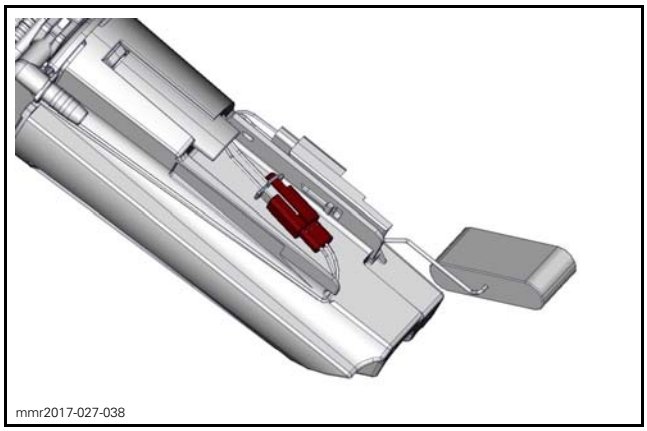

3. Slide the potentiometer out of the fuel pump reservoir.

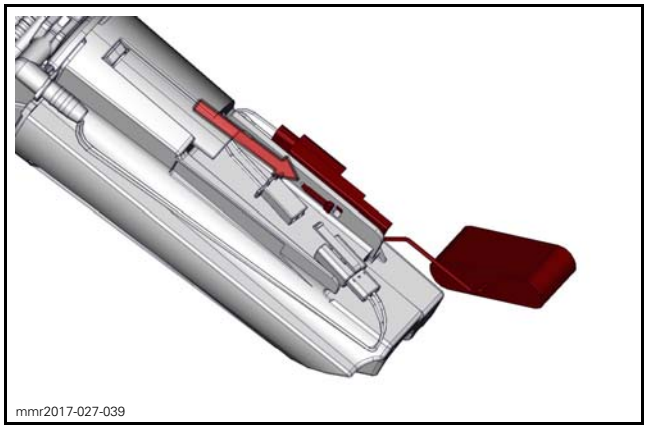

4. Remove fuel level sensor.
5. Replace the fuel level sensor with a new one and reverse steps.

POWER DISTRIBUTION

POWER DISTRIBUTION

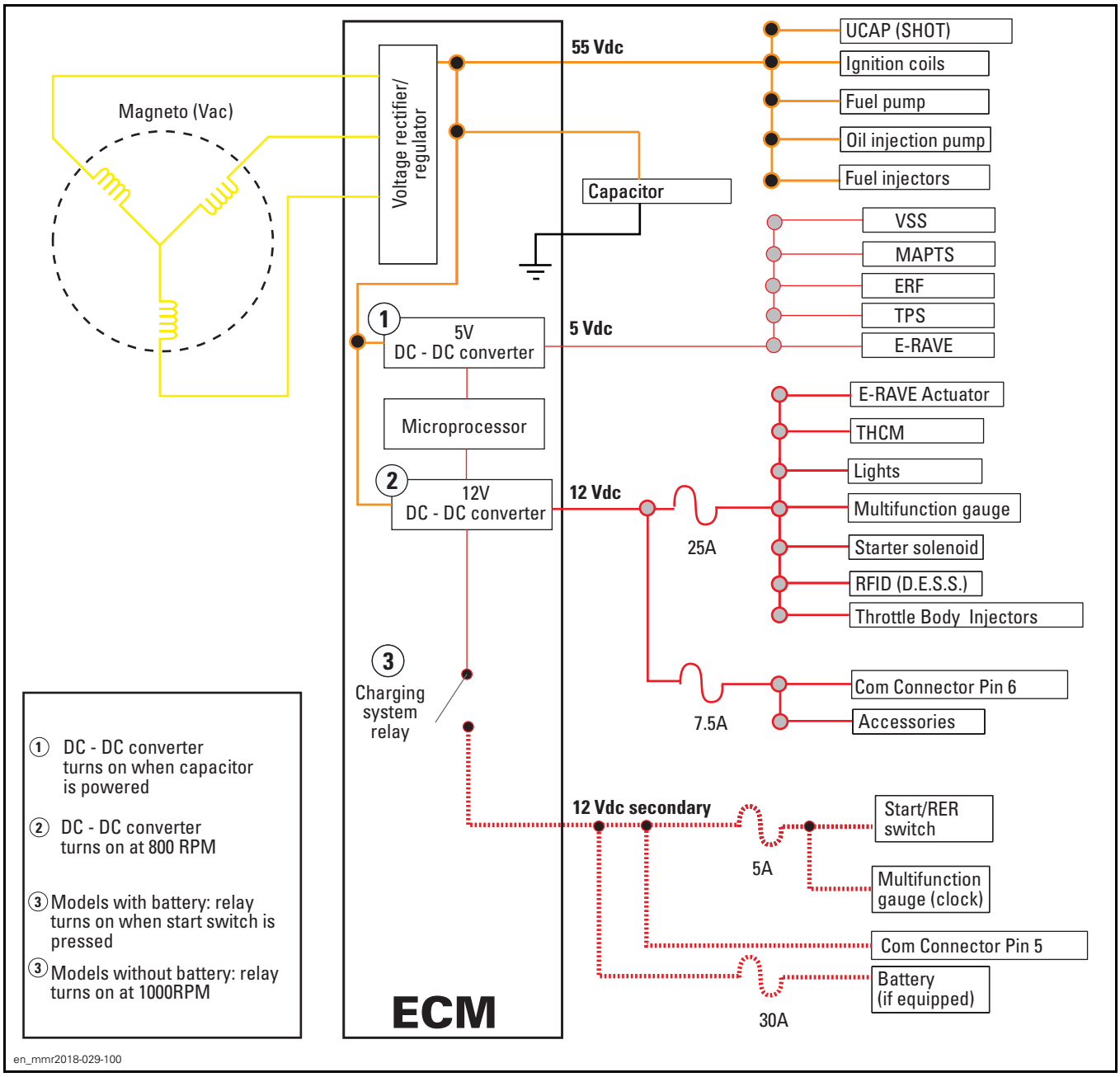

GROUNDS

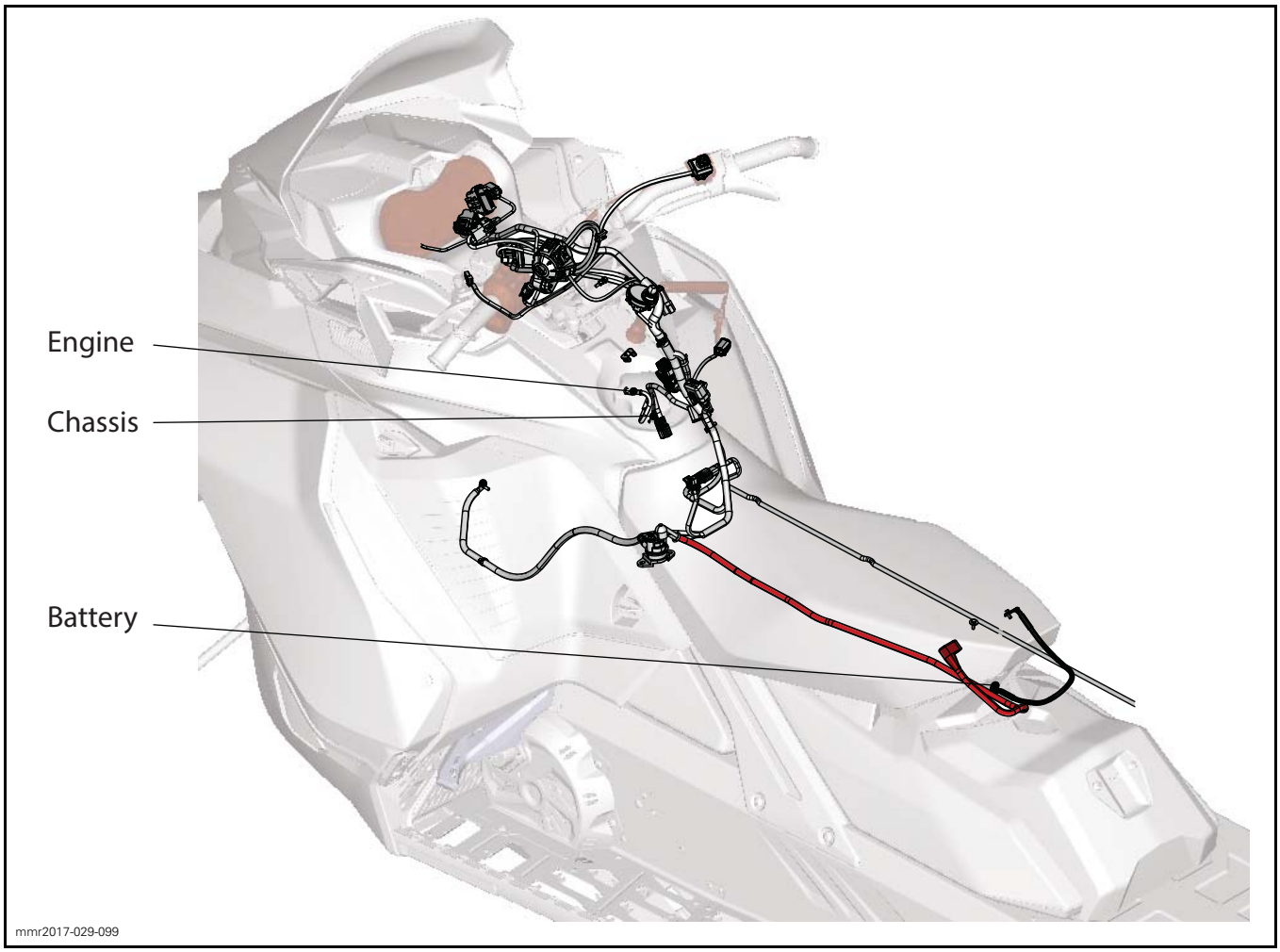

GENERAL

OVERVIEW

Power distribution is shown in red on the wiring diagram. Refer to *KNOWLEDGE CENTER*.

The magneto stator is wired with a 3 phase star configuration winding.

At high RPM if the magneto power is greater than the loads, the ECM will shunt the stator windings to regulate its power as necessary.

The voltage regulator/rectifier is part of the ECM.

The ECM receives the energy produced by the magneto, rectifies the alternating current (AC) to direct current (DC) and regulates the voltage.

SYSTEM VOLTAGE (55 VDC)

Since the available power is low when cranking, the ECM first supplies 55 Vdc to the illustrated components that need voltage for the starting and the basic operation of the engine.

NOTE: When starting, voltage may be closer to 40Vdc until RPM increases.

ECM

For more information, refer to *ENGINE MANAGEMENT SYSTEM* subsection.

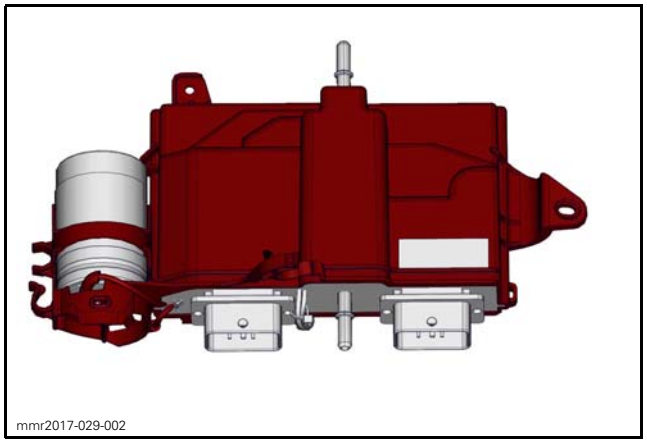

mmr2017-029-002

UCAP (SHOT System)

For information, refer to *SHOT SYSTEM* subsection.

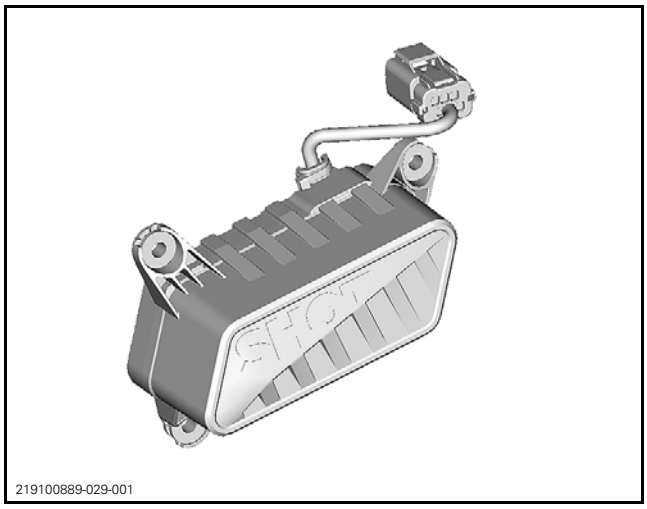

219100889-029-001

Fuel Injector

For more information, refer to *E-TEC DIRECT FUEL INJECTION* subsection.

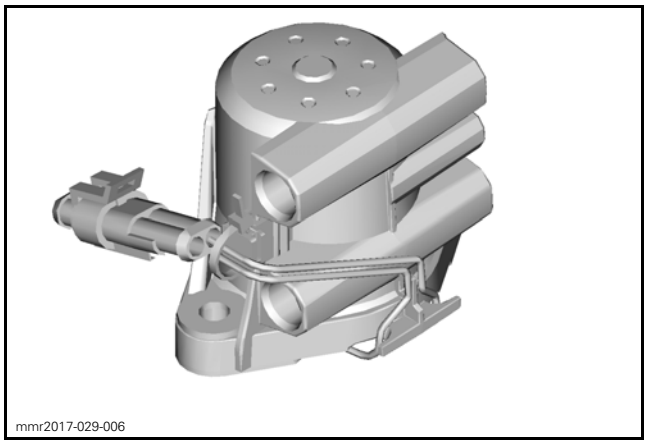

mmr2017-029-006

Ignition Coil

For more information, refer to *IGNITION SYSTEM* subsection.

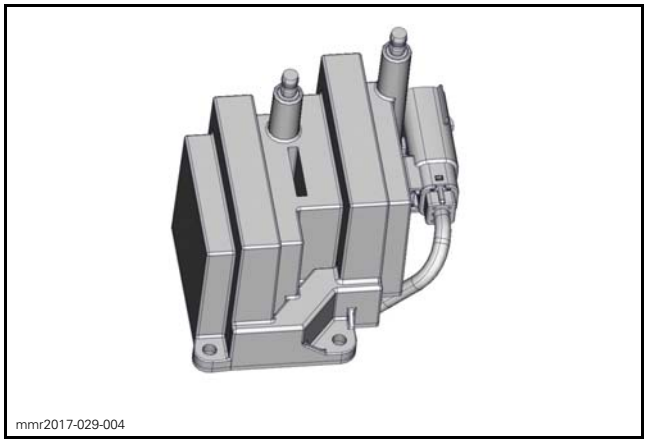

mmr2017-029-004

Fuel Pump

For more information, refer to *FUEL TANK AND FUEL PUMP* subsection.

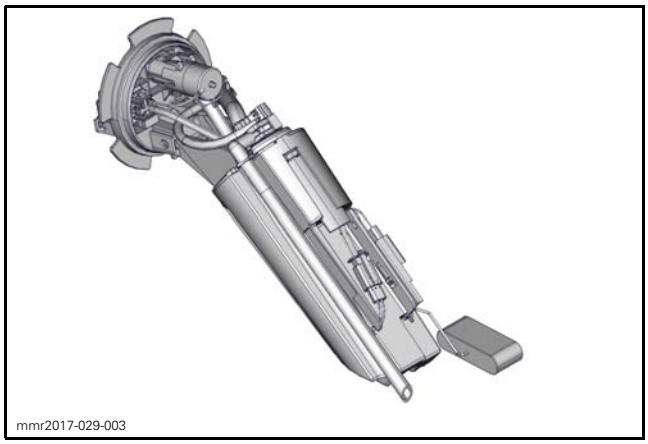
mmr2017-029-003

Capacitor

For more information, refer to *CHARGING SYSTEM* subsection.

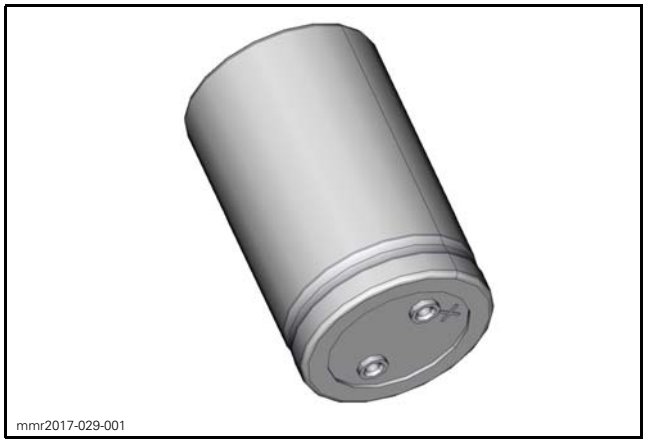
mmr2017-029-001

SYSTEM VOLTAGE (12 VDC)

A DC-DC converter, in the ECM, steps down the 55 DC voltage to 12 Vdc when the engine reaches 800 RPM.

Since the available power is not at its maximum at the early stage of engine starting, the ECM supplies 12 Vdc to the following components when engine reaches 800 RPM.

- THCM (thermocouple module)
- E-RAVE actuator
- Communication connector
- Lighting system
- Multifunction gauge
- Heaters
- Heated visor
- Auxiliary lights
- 12 V power outlet
- Other accessories.

Approximately 25 A are available at idle (1200 RPM). Refer to *CHARGING SYSTEM* for more information.

Below 2000 RPM, the total available current is limited to reduce the load on the system voltage.

Above 2000 RPM, the 12 Vdc system has a maximum of 30 A available.

If electrical system load is increased, or the RPM is decreased, the 12 Vdc system output is reduced in order to maintain 55 Vdc for engine operation.

GROUNDS

Engine

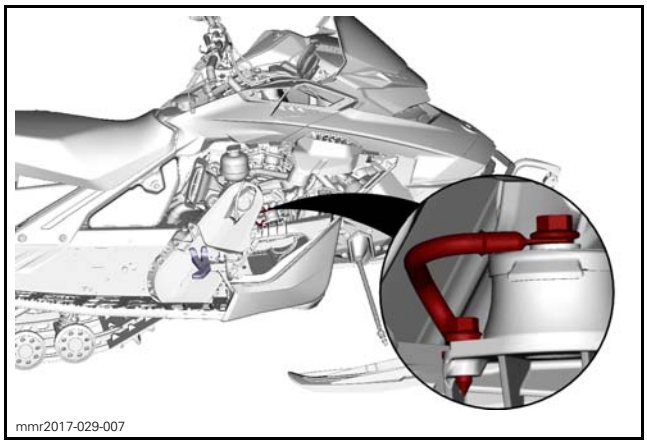
mmr2017-029-007

TIGHTENING TORQUE	
M6 screw on chassis	10 N•m ± 2 N•m (89 lbf•**in** ± 18 lbf•**in**)

Chassis

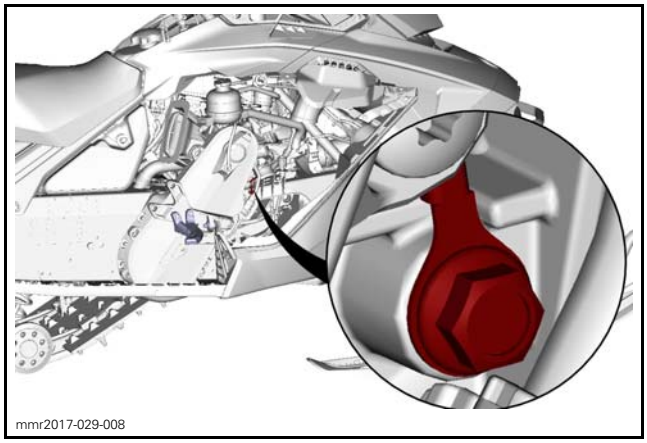
mmr2017-029-008

TIGHTENING TORQUE	
M5 screw on chassis	5 N•m ± 0.5 N•m (44 lbf•**in** ± 4 lbf•**in**)

Battery

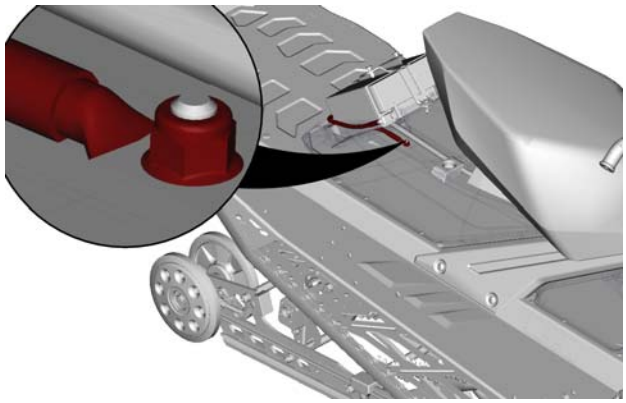

mmr2017-029-005

TIGHTENING TORQUE	
M6 shoulder nut	10 N•m ± 2 N•m (89 lbf•**in** ± 18 lbf•**in**)

WIRING HARNESS AND CONNECTORS (600R E-TEC AND 850 E-TEC)

SERVICE TOOLS

Description	Part Number	Page
ECM ADAPTER TOOL	529 036 166	116
ECM TERMINAL REMOVER 2.25	529 036 175	116
ECM TERMINAL REMOVER 3.36	529 036 174	116

SERVICE TOOLS – OTHER SUPPLIER

Description	Part Number	Page
DELPHI TERMINAL EXTRACTOR	12094429	118–119
FCI TERMINAL EXTRACTOR TOOL	54241678	117–118
MOLEX 150 TERMINAL EXTRACTOR TOOL	63813 - 1500	117–118

NOTE: Vehicles may not be equipped with all connectors shown in illustrations.

CHASSIS HARNESS - TRAIL AND CROSSOVER VEHICLES

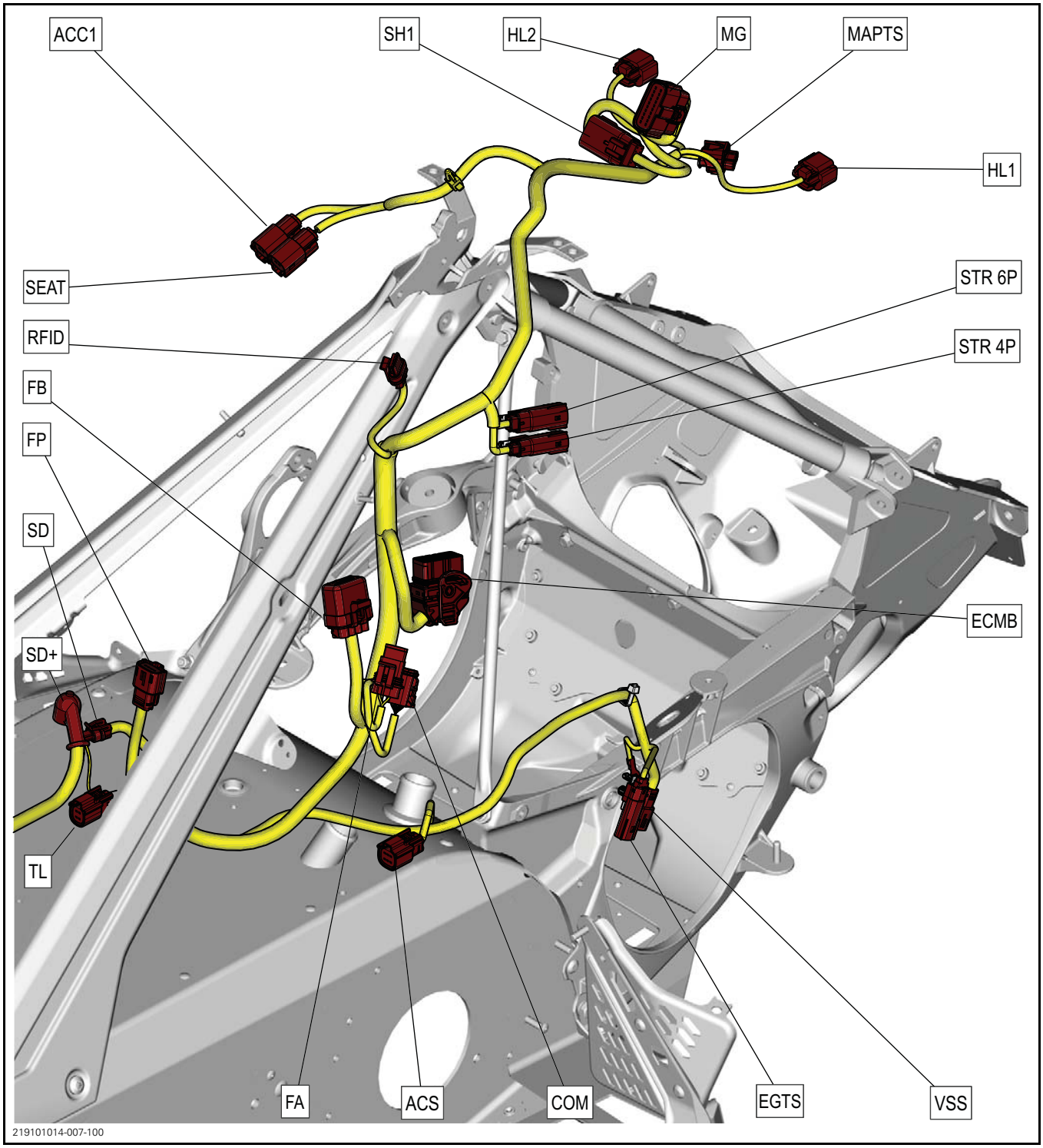

CHASSIS HARNESS - DEEP SNOW VEHICLES

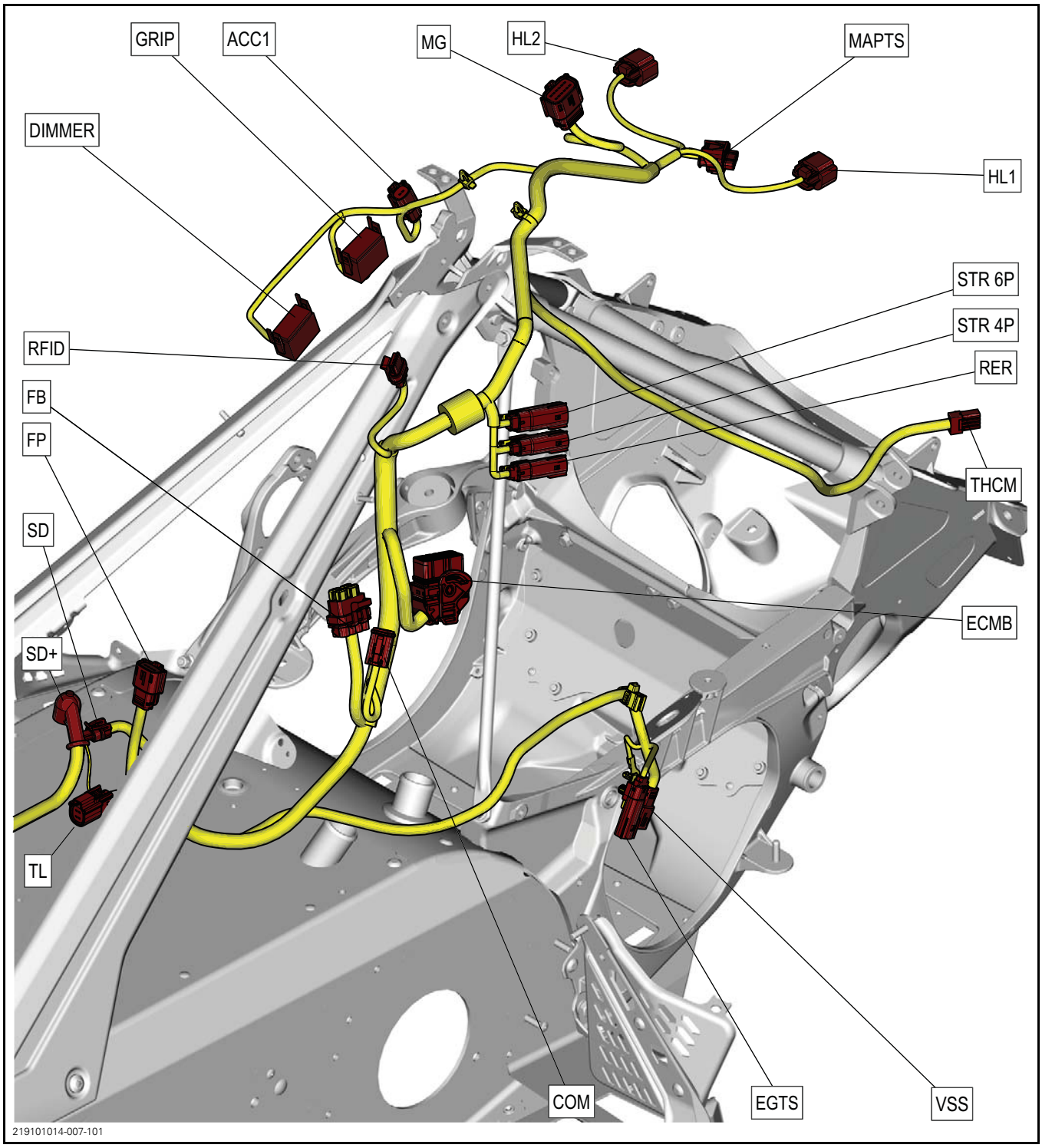

CHASSIS HARNESS - UTILITY VEHICLES

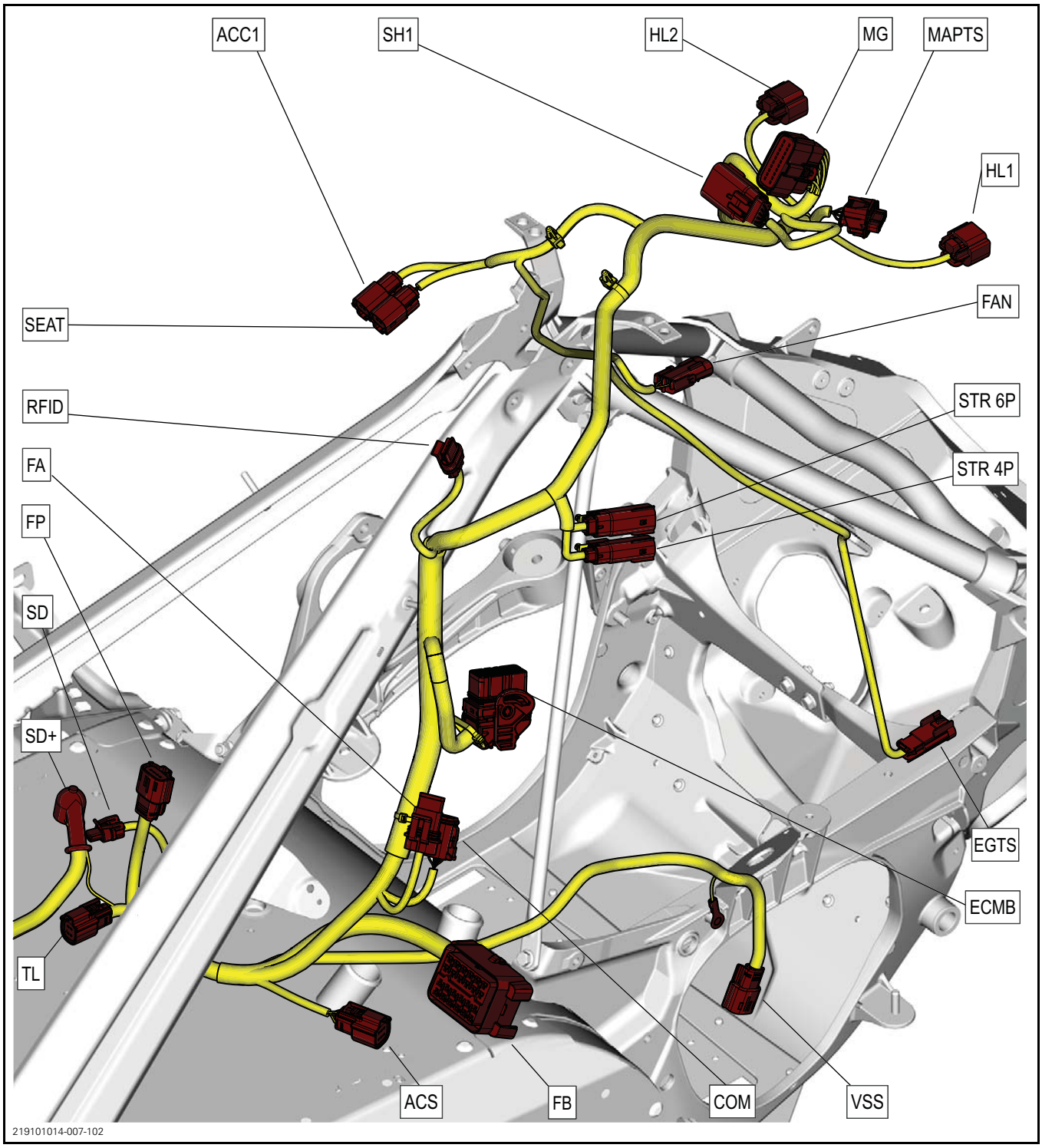

ENGINE HARNESS

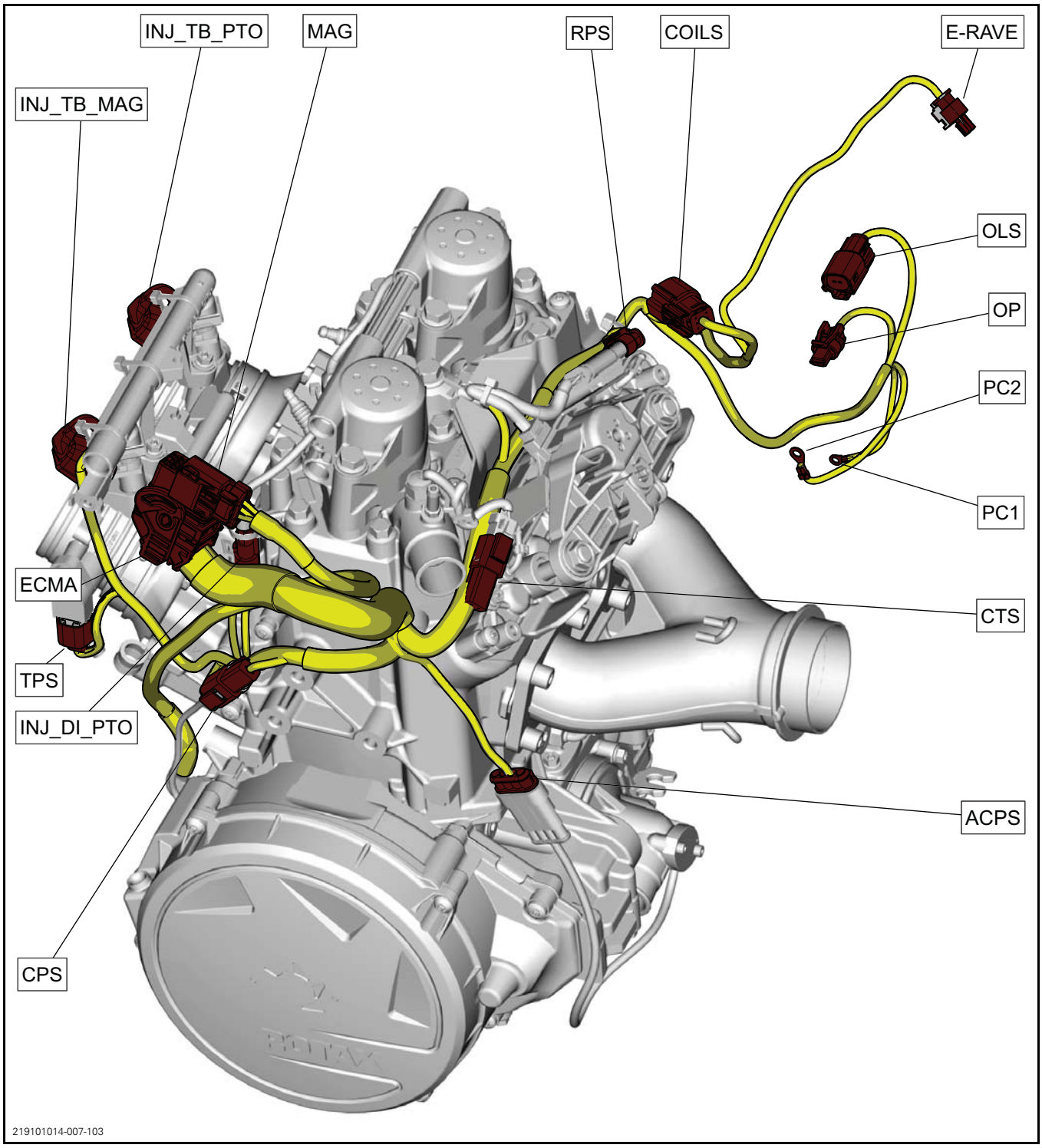

GENERAL

ACRONYMS

ACRONYM	DESCRIPTION	ACRONYM	DESCRIPTION
ACC	Accessory	INJ_TB_MAG	Throttle Body Injector Magneto
ACS	Air Controlled Suspension	INJ_TB_PTO	Throttle Body Injector PTO
COM	Communication	MAG	Magneto
CPS	Crankshaft Position Sensor	MAPTS	Manifold Air Pressure and Temperature Sensor
CTS	Coolant Temperature Sensor	MG	Multifunction Gauge
DIMMER	Dimmer switch	OLS	Oil Level Sensor
ECMA	ECM connector A (engine harness)	OP	Oil Pump
ECMB	ECM connector B (chassis harness)	PC	Oil Pump Feedback Switch
EGTS	Engine Gas Temperature Sensor	RER	Rotax Electronic Reverse
E-RAVE	RAVE Actuator	RFID	Radio Frequency Identification
RPS	Rave Position Sensor)	SD	Starter Solenoid
FA	Fuse holder	SEAT	Heated seat
FAN	Radiator fan	SH1	Switch Housing 1
FB	Fusebox	STR	Steering Connector
FP	Fuel Pump	THCM	Thermocouple Module
GRIP	Heater switch	TL	Tail Light
HL	HeadLamp	TPS	Throttle Position Sensor
INJ_DI_MAG	Direct Injector Magneto	VSS	Vehicle Speed Sensor
INJ_DI_PTO	Direct Injector PTO		

PROCEDURES

⚠ WARNING

When disassembling any connector for repair or replacement on the vehicle, always disconnect the battery to ensure all electrical power is removed and prevent any possibility of a short circuit. Refer to *CHARGING SYSTEM* subsection.

DIAGNOSTIC CONNECTOR (DEUTSCH)

Disassembling and Reassembling the Connector

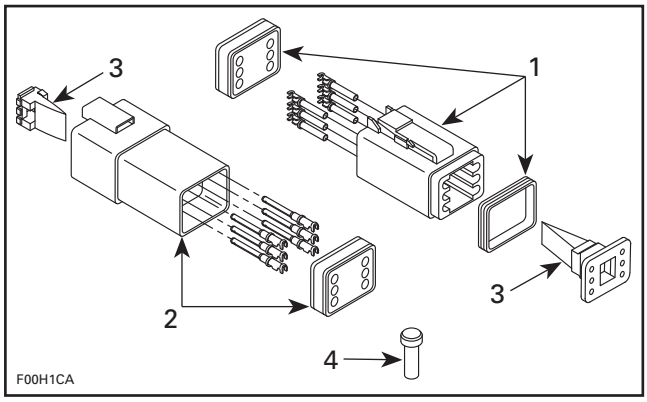

TYPICAL - DEUTSCH CONNECTOR
1. Male connector
2. Female connector
3. Secondary lock
4. Sealing cap

NOTICE Do not apply dielectric grease on terminal inside connector.

To remove terminals from connector, proceed as follows:

1. Using long nose pliers, pull out the plastic lock from between the terminals.

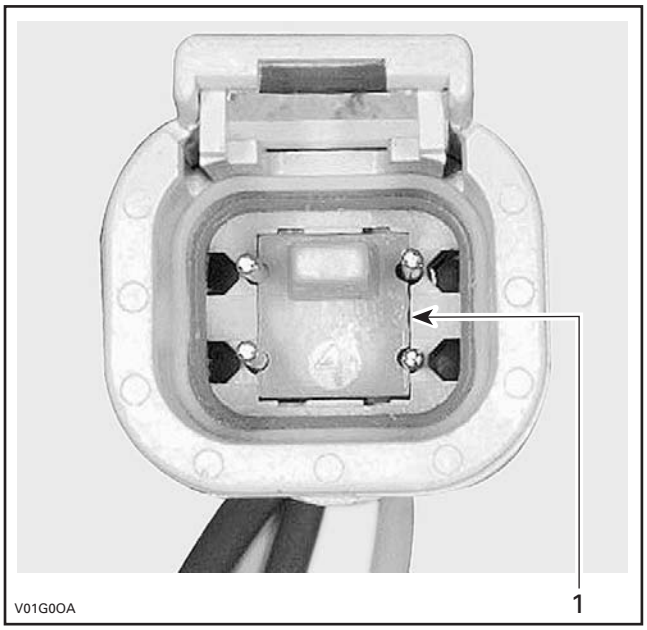

TYPICAL - FEMALE CONNECTOR
1. Female lock

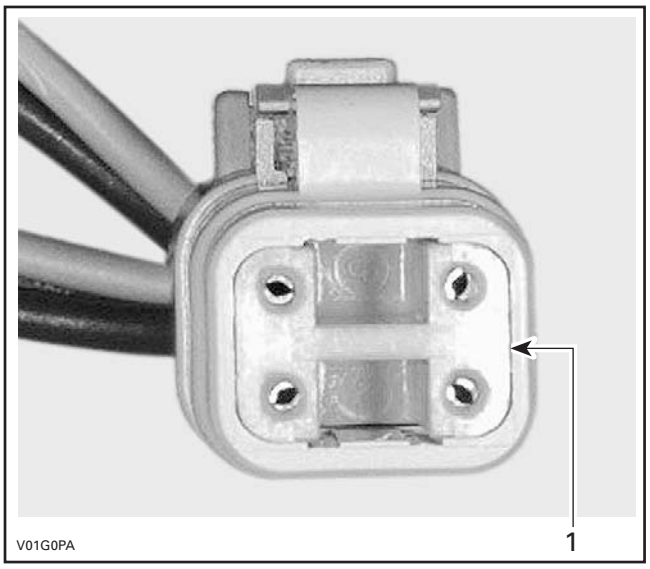

TYPICAL - MALE CONNECTOR
1. Male lock

NOTE: Before pin extraction, push wire forward to relieve pressure on retaining tab.

2. Insert a 4.8 mm (.189 in) wide screwdriver blade inside the front of the terminal cavity.
3. Pry the retaining tab away from the terminal while gently pulling the wire and terminal out of the back of the connector.

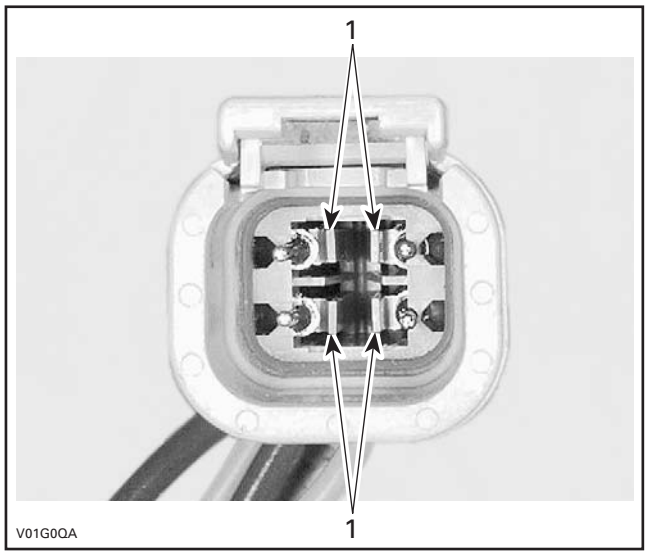

TYPICAL - FEMALE CONNECTOR
1. Retaining tabs

To install:

1. For insertion of a terminal, ensure the plastic lock is removed.
2. Insert terminal through the back of the connector in the appropriate position, and push it in as far as it will go. You should feel or hear the terminal lock engage.
3. Pull back on the terminal wire to ensure the retention fingers are holding the terminal.
4. After all required terminals have been inserted, the lock must be installed.

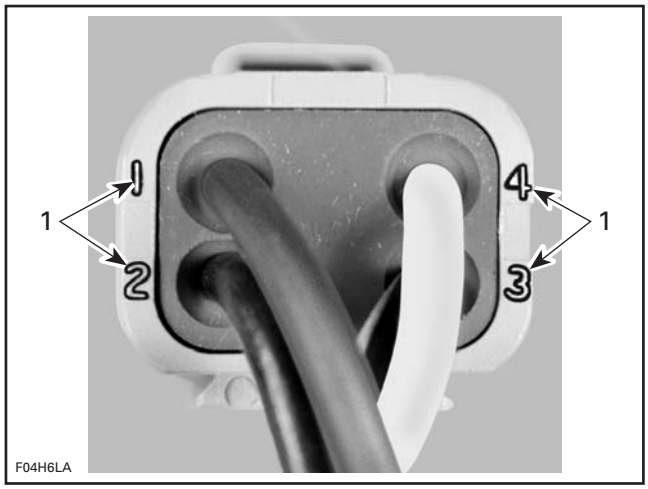

TYPICAL - CONNECTOR PIN-OUT
1. Terminal position identification numbers

ECM CONNECTOR (MOLEX)

There are 2 connectors on the ECM.

The engine wiring harness connector is connected to ECM connector "A". The vehicle wiring harness connector is connected to ECM connector "B".

Each ECM connector has 48 pins however, connectors "A" and "B" are not interchangeable due to their specific keyways.

NOTE: If you need to remove the connector, be sure to not disconnect fuel quick-connector at ECM. If you need to remove the ECM or fuel quick connector, insure the ECM electrical connectors are securely in place and avoid fuel intrusion into connector/seal.

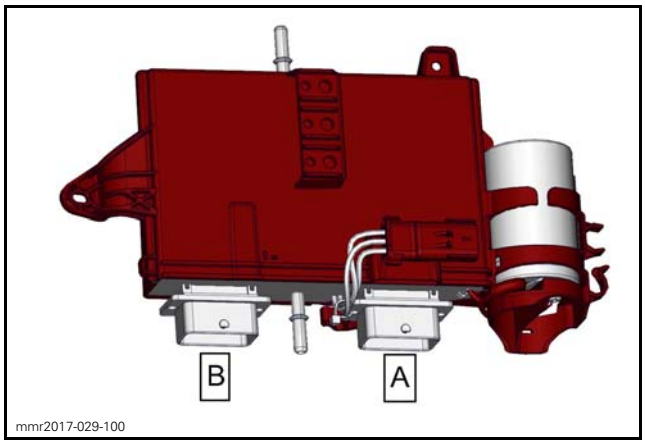

ECM CONNECTORS

Removing the Connector

1. To access the ECM, refer to *ELECTRONIC FUEL INJECTION (EFI)* subsection.
2. Press **and hold** the locking tab on the connector to be disconnected.

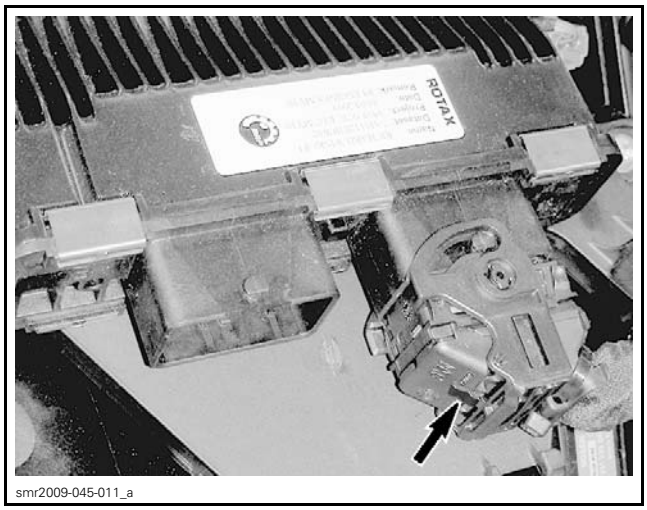

LOCKING TAB TO PRESS AND HOLD

3. As you hold the locking tab, rotate the connector locking cam until it stops.

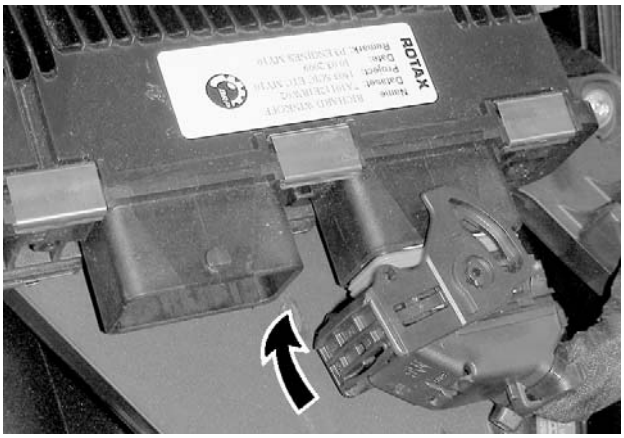

smr2009-045-012_a

CONNECTOR LOCKING CAM ROTATION TO RELEASE

4. Pull connector off ECM.

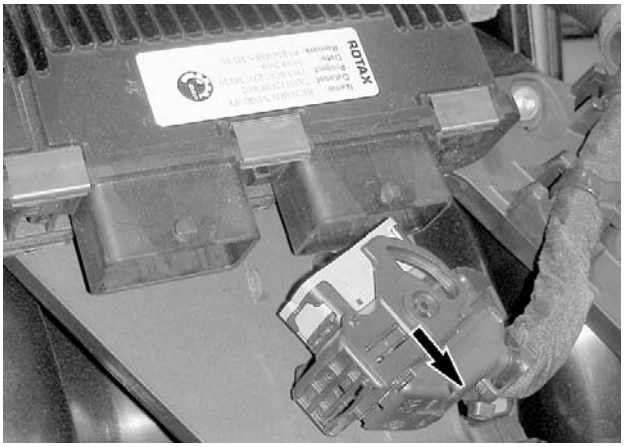

smr2009-045-013_a

Installing the Connector

1. Fully open connector locking cam.

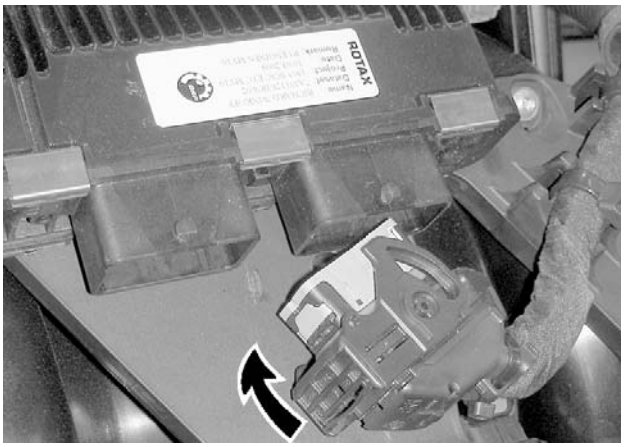

smr2009-045-013_b

CONNECTOR LOCKING CAM IN RELEASE POSITION

2. Insert connector on ECM.
3. As you push the connector onto the ECM, rotate the connector locking cam until it snaps locked.

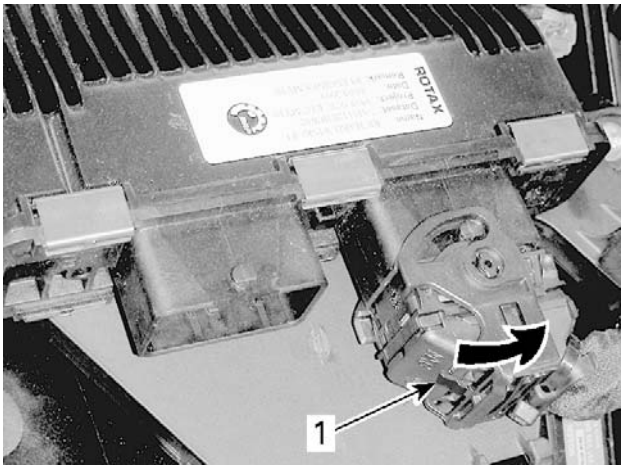

smr2009-045-011_b

1. Locked here

4. Ensure the locking tab is fully out.

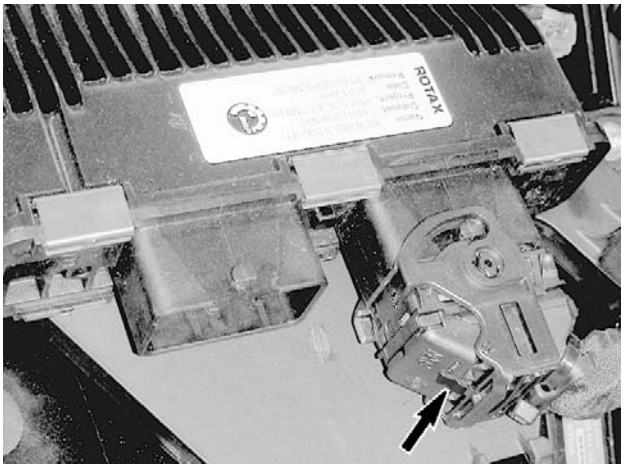

smr2009-045-011_a

LOCKING TAB FULLY OUT

Inspecting the Connector

Before replacing an ECM, always check electrical connections.

1. Ensure connector locking mechanism is functioning properly.
2. Ensure all wire terminals (pins) are properly locked in the connector.
3. Ensure they are very tight, make good contact with the pins in the ECM.
4. Ensure the pins in the harness connector and the ECM connector are clean, shiny and corrosion-free.

NOTE: A "defective ECM module" could possibly be repaired simply by disconnecting and reconnecting it.

NOTICE **Do not apply any lubricant product to the pins of the ECM connector.**

Probing the Connector

The most recommended and safest method to probe the MOLEX (ECM) connector terminals is to use the ECM adapter tool. This tool will prevent deforming or enlarging of the terminals, which would lead to bad ECM terminal contact creating intermittent or permanent problems.

REQUIRED TOOL	
ECM ADAPTER TOOL (P/N 529 036 166)	

1. Disconnect the ECM connector to be probed, and reconnect it on the ECM adapter.
2. Probe wire terminals of the circuit to be tested directly in the adapter holes.

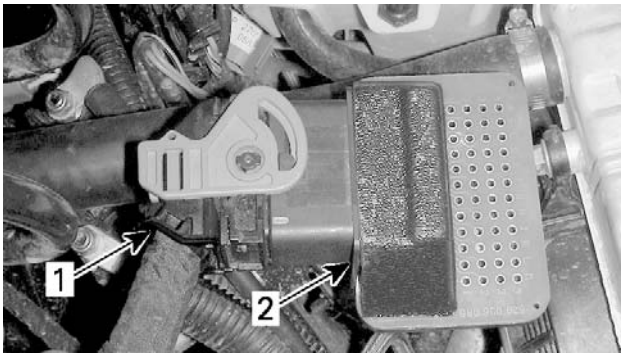

vmr2008-139-016_a

TYPICAL
1. ECM connector
2. ECM adapter

NOTICE **Never probe directly on the ECM harness connector. This could change the shape or enlarge the terminals and create intermittent or permanent contact problems.**

Removing the Connector Terminal (Harness Connector)

To remove a signal terminal from the ECM harness connector, use the ECM terminal remover 2.25.

REQUIRED TOOL	
ECM TERMINAL REMOVER 2.25 (P/N 529 036 175)	

To remove a power terminal, use the ECM terminal remover 3.36.

REQUIRED TOOL	
ECM TERMINAL REMOVER 3.36 (P/N 529 036 174)	

1. Remove rear protector from connector.
2. Pull out the connector lock.

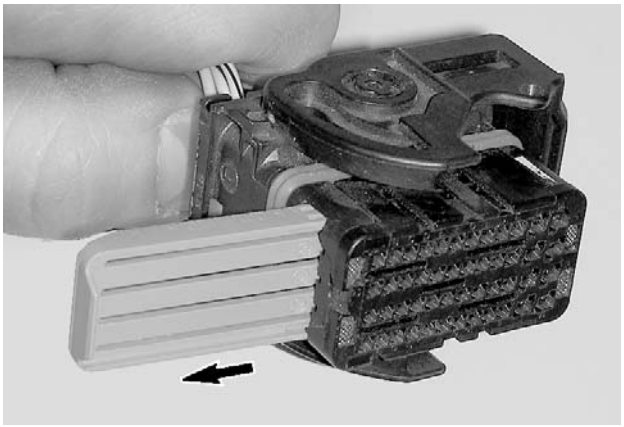
smr2009-045-025_a

3. Insert tool to unlock terminal.

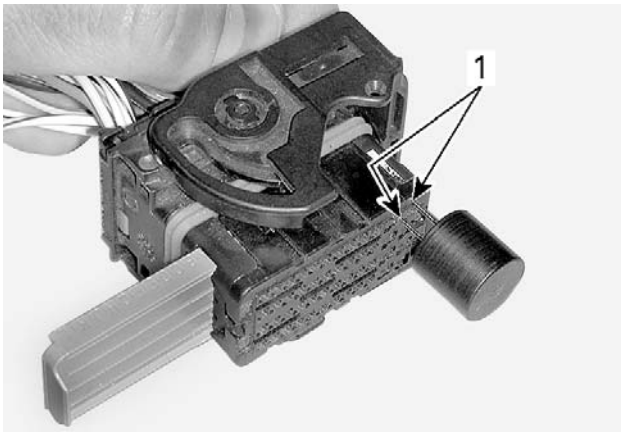

smr2009-045-026_a

1. Unlock here

4. Gently pull on the wire to extract the terminal out the back of the connector.

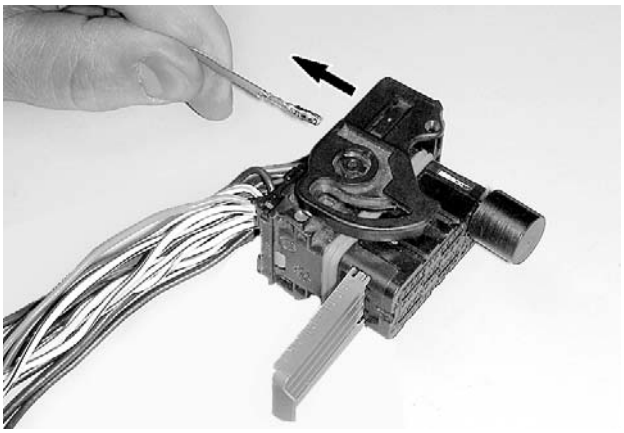
smr2009-045-027_a

NOTICE **Before installing wire terminals in the connector, ensure all terminals are properly crimped on wires. After installation of wire terminals in the connectors, ensure they are properly locked by gently pulling on them as if to extract them.**

MOLEX CONNECTORS (EXCEPT ECM)

Extracting a Terminal (Female Connector)

The same procedure must be done to remove a seal plug.

1. Insert a small flat screwdriver in the pry holes of the terminal locator, on the terminal side of the connector.

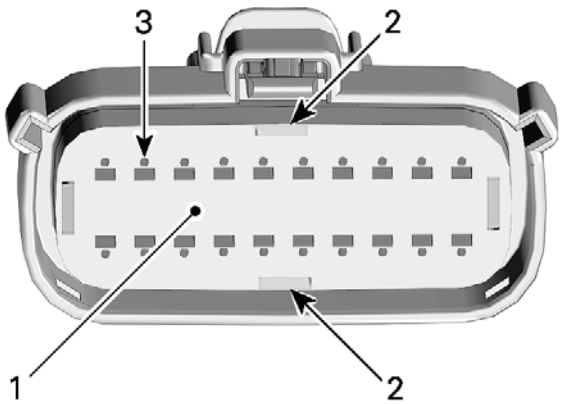

smr2014-030-012_b

1. Terminal locator
2. Pry holes
3. Holes for inserting terminal extractor tool

2. Apply slight pressure and pry the terminal locator out until it clicks (± 4 mm (.16 in)).

NOTE: Do not remove the terminal locator from the connector housing.

3. Insert the extractor tool in the small hole adjacent to the terminal.

NOTE: Push the extractor tool in only as far as required to release the lock from the terminal. The tool should slide along the terminal and be inserted between the connector housing and the terminal lock.

REQUIRED TOOL	
FCI TERMINAL EXTRACTOR TOOL (P/N 54241678)	
or,	
MOLEX 150 TERMINAL EXTRACTOR TOOL (P/N 63813 - 1500)	

4. Gently pull on the wire to extract the terminal out the back of the connector.

Extracting the Terminal (Male Connector)

The same procedure must be done to remove a seal plug.

1. Using a pair of thin long nose pliers, pull the terminal locator (the white plastic insert in the connector) out to the detent position (± 13 mm (1/2 in) between terminal locator and connector housing face). This will allow unlocking of the pins.

NOTICE **Do not attempt to remove the terminal locator or damage will occur. Be careful not to bend the pins when using the pliers.**

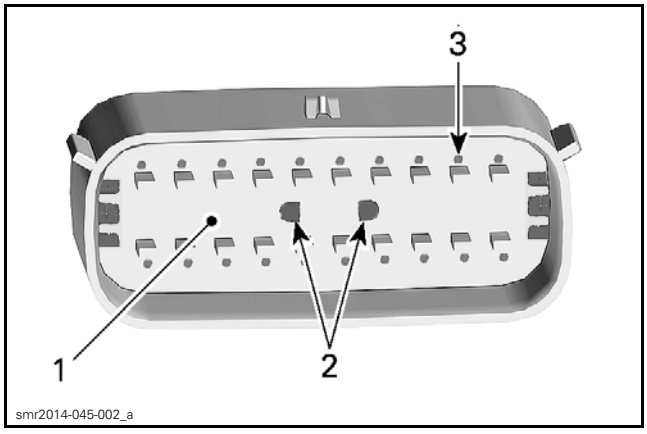

smr2014-045-002_a

1. Terminal locator
2. Insert long nose pliers here
3. Holes for inserting terminal extractor tool

2. Insert the extractor tool in the small hole adjacent to the terminal.

NOTE: Push the extractor tool in only as far as required to release the lock from the terminal. The tool should slide along the terminal and be inserted between the connector housing and the terminal lock.

REQUIRED TOOL	
FCI TERMINAL EXTRACTOR TOOL (P/N 54241678)	
or,	
MOLEX 150 TERMINAL EXTRACTOR TOOL (P/N 63813 - 1500)	

3. Gently pull on the wire to extract the terminal out the back of the connector.

Inserting the Terminal

1. Ensure the terminal is properly crimped onto the wire.
2. Ensure the terminal locator (the white plastic insert in the connector) is out in the detent position.
3. Orient the key on the back of the male terminal with the keyway on the rear of the housing

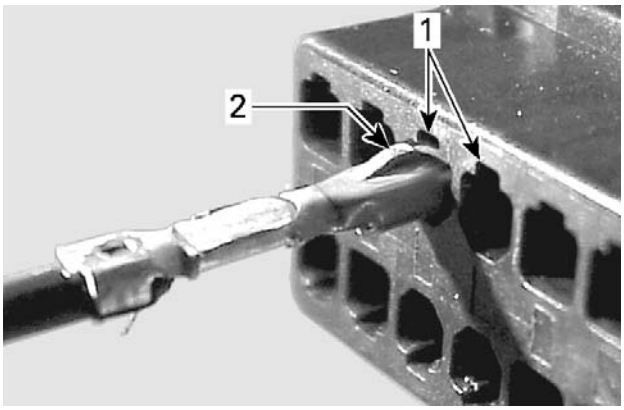

smr2014-045-004_a

TYPICAL - PIN INSERTION
1. Keyway
2. Terminal key

4. Push the terminal into the housing until it clicks.
5. Gently pull on the terminal to ensure it is properly locked.
6. Repeat previous steps for each terminal to be inserted.
7. Push the terminal locator into the connector to the locked position.

DELPHI/PACKARD CONNECTORS

Removing the Connector Terminal

To remove a terminal (pin) from the connector, use a special tool such as the Delphi terminal extractor.

REQUIRED TOOL	
DELPHI TERMINAL EXTRACTOR (P/N 12094429)	

NOTE: Grinding the tool end to a taper is required.

1. Carefully insert the tool in the space provided to release the pin lock.
2. Push the pin out the front of the connector by pushing on the wire.

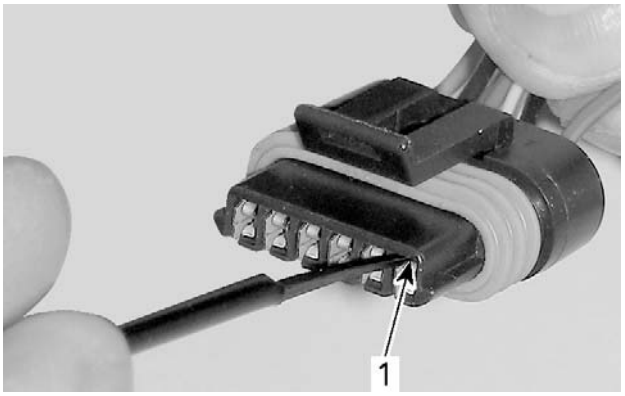

smr2009-045-014_a

1. Unlock terminal here

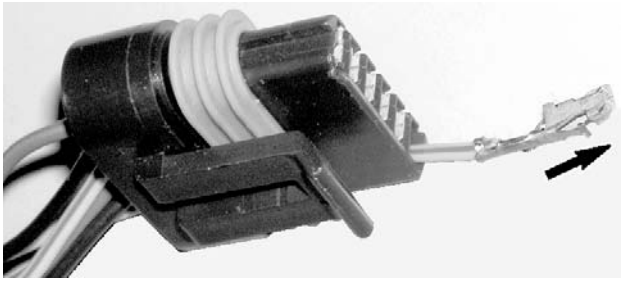
smr2009-045-015_a

NOTICE **Before installing terminals in the connectors, ensure all terminals are properly crimped on the wires. After installation of the wire terminals in the connectors, ensure they are properly locked by gently pushing on them as if to extract them.**

DELPHI CONNECTORS

Removing the Terminal

1. To remove a terminal from connector, first remove the locking cap.

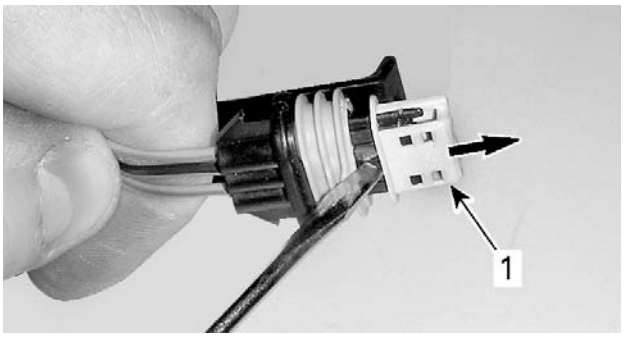

smr2009-045-023_a

1. Pry out locking cap

2. Carefully insert the Delphi terminal extractor in the space provided to release the pin lock.

REQUIRED TOOL	
DELPHI TERMINAL EXTRACTOR (P/N 12094429)	

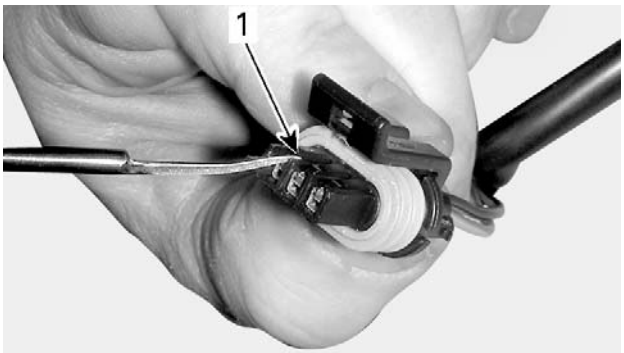

smr2009-045-024_a

1. Unlock here

3. Gently pull on the wire to extract the pin out the back of the connector.

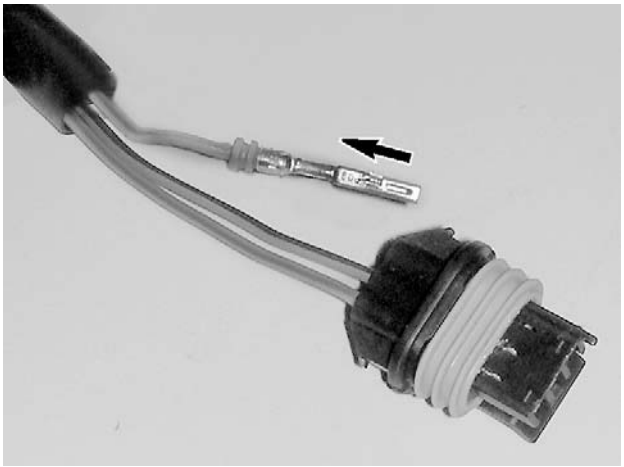

smr2009-045-028_a

NOTICE Before installing terminals in the connectors, ensure all terminals are properly crimped on the wires. After installation of the wire terminals in the connectors, ensure they are properly locked by gently pushing on them as if to extract them.

BATTERY CABLES

Crimping the Battery Cable

Carefully strip the wire approximately to 10 mm (3/8 in) in length, using a wire stripping tool or sharp blade/knife.

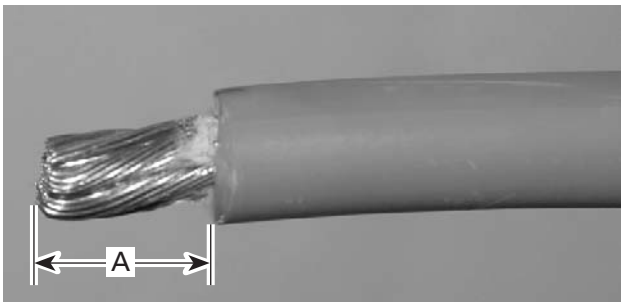

A32E2QA

A. 10 mm (3/8 in)

NOTE: Make sure not to cut wire strands while stripping the wire.

Install the appropriate terminal on the wire according to the requirement. Refer to appropriate *PARTS CATALOG*.

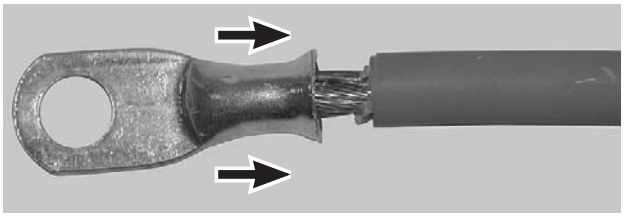

A32E2RA

INSTALLATION OF TERMINAL

Follow the instructions provided with the crimping tool to select the proper position of the tool.

NOTE: Different wires require different crimping pliers settings, so make sure to follow the instruction supplied with the tool.

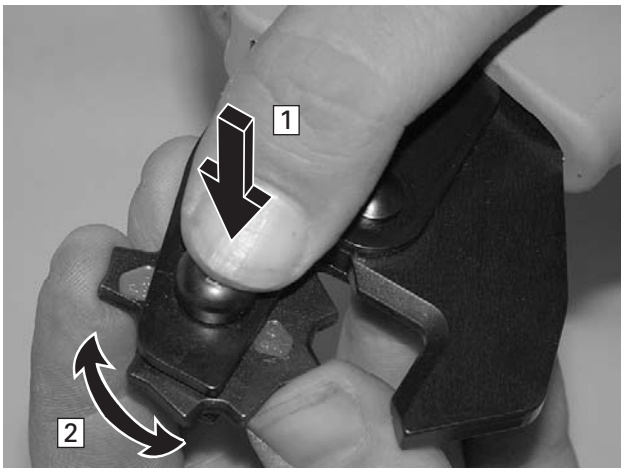

A32E2SA

POSITIONING THE CRIMPING PLIERS
Step 1: Press
Step 2: Rotate

After positioning the crimping pliers, crimp the terminal already installed on wire.

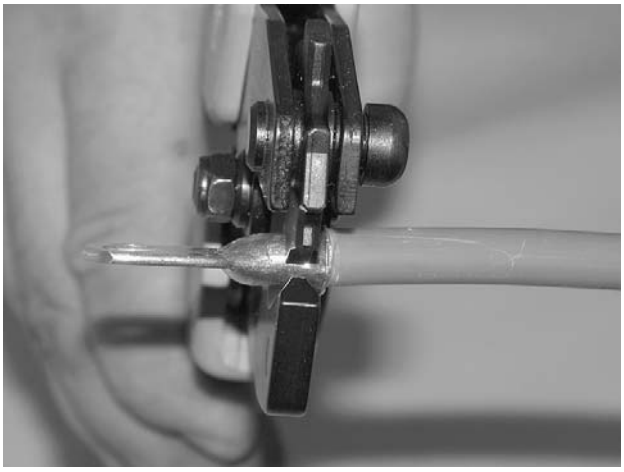
A32E2TA

CRIMPING OF WIRE

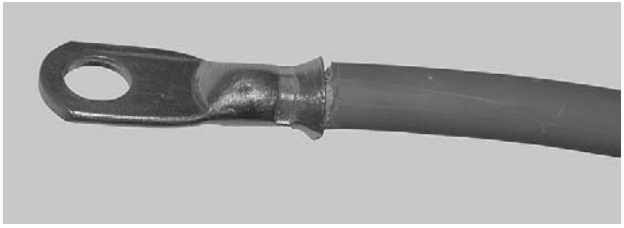
A32E2UA

PROPERLY CRIMPED WIRE

To verify, if the wire is properly crimped, apply some pulling force on wire and the terminal at the same time from both directions.

NOTICE **Never weld the wire to the terminal. Welding can change the property of the wire and it can become brittle and break.**

Install the protective heat shrink rubber tube on the terminal. Heat the heat shrink rubber tube using the heat gun so that it grasps the wire and the terminal.

NOTICE **Make sure that the protective heat shrink rubber tube has been properly installed and no part of wire is exposed.**

SPLICES REPAIR PROCEDURE

CASE 1: Wire Detached from Splice

NOTICE **Repairs described in this section should never be performed on harness sections that can be exposed to water.**

1. Locate splice. Refer to splices location diagrams.
2. Remove wires from protector tube.
3. Locate the shrink tube protecting the defective splice.

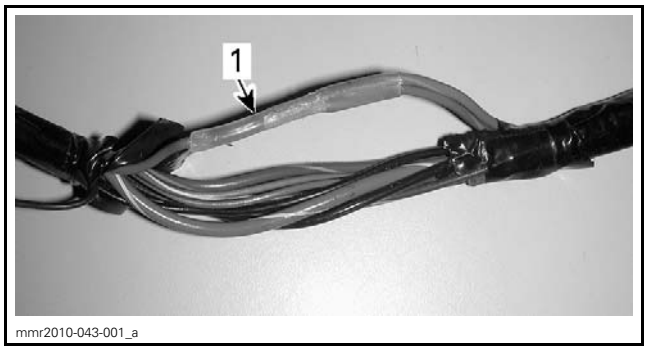

mmr2010-043-001_a

1. Shrink tube

4. Remove the shrink tube.
   4.1 Using a blade, cut the shrink tube.


mmr2010-043-002

NOTICE **Be careful with the blade to avoid cutting wires insulation.**

   4.2 Slightly heat the shrink tube using a heat gun.

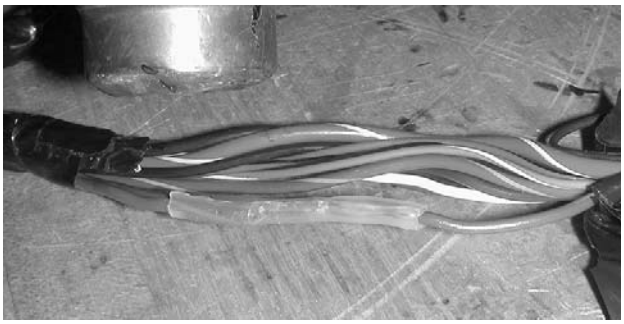
mmr2010-043-003

4.3 Remove the shrink tube with long nose pliers.

5. Locate detached wire from splice.

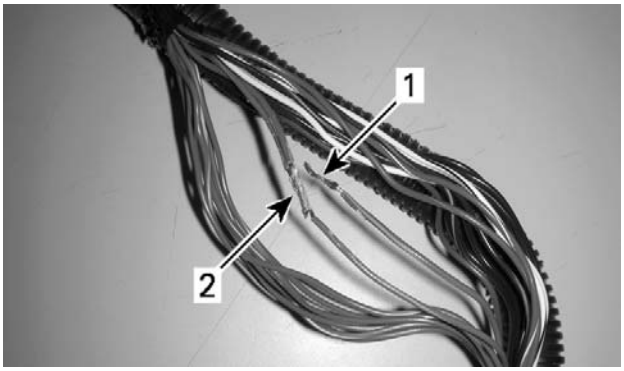

mbg2008-021-116_a

1. *Detached wire*
2. *Splice*

6. Twist detached wire around splice.

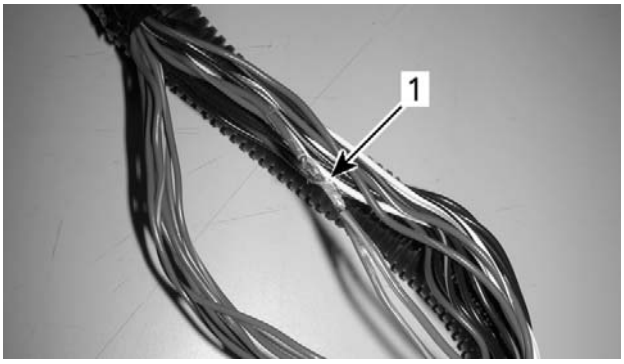

mbg2008-021-117_a

1. *Twisted wire*

7. Perform a tin solder on twisted wire.
8. Apply electrical tape to cover splice.

NOTE: Make sure tape overlaps on wire insulation, approximately 13 mm (1/2 in) each side.

9. Reinstall wires into protector tube.

CASE 2: Wire Broken from Splice

NOTICE **Repairs described in this section should never be performed on harness sections that can be exposed to water.**

1. Locate splice. Refer to splices location diagrams.
2. Remove wires from protector tube.
3. Locate the shrink tube protecting the defective splice.

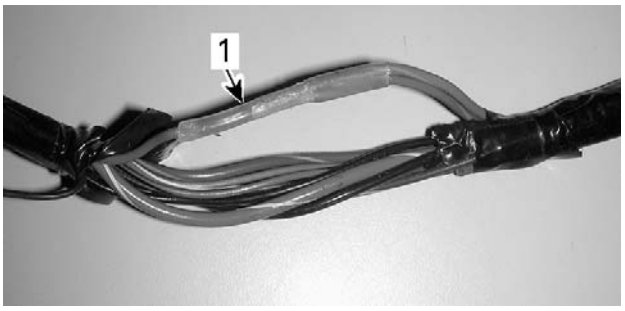

mmr2010-043-001_a

1. *Shrink tube*

4. Remove the shrink tube.

4.1 Using a blade, cut the shrink tube.


mmr2010-043-002

NOTICE **Be careful with the blade to avoid cutting wires insulation.**

4.2 Slightly heat the shrink tube using a heat gun.

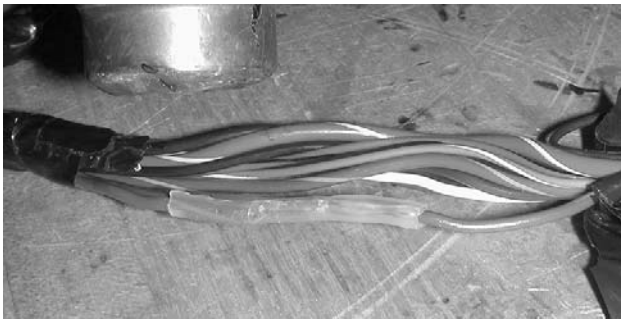
mmr2010-043-003

4.3 Remove the shrink tube with long nose pliers.

5. Locate broken wire from splice.

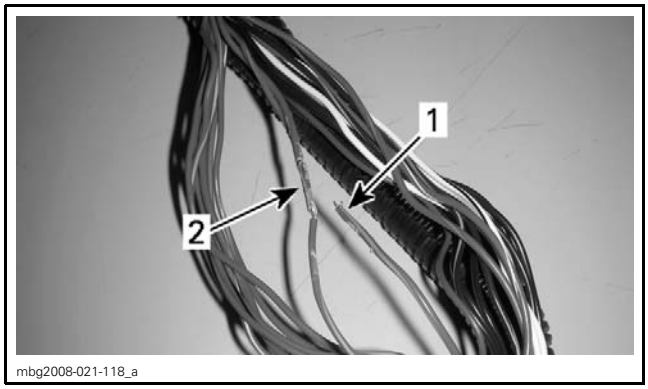

1. *Broken wire*
2. *Splice*

6. Strip wire insulation at the end of broken wire.
7. Strip wire insulation below the splice.

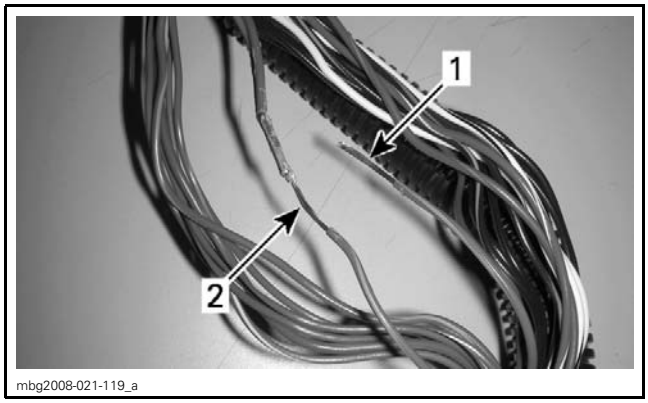

1. *Broken wire stripped*
2. *Splice wire stripped*

8. Twist wire around stripped wire.

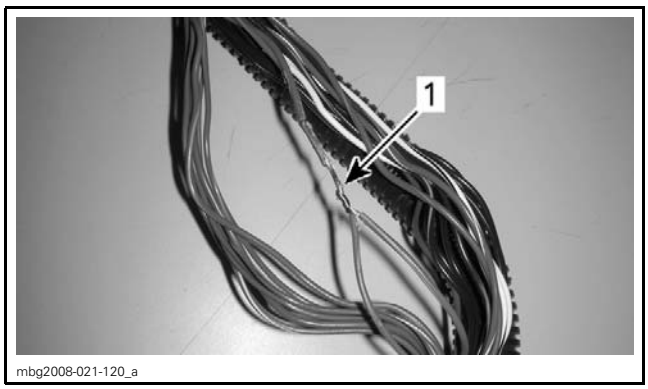

1. *Twisted wire*

9. Perform a tin solder on twisted wire.
10. Apply electrical tape to cover splice.

NOTE: Make sure tape overlaps on wire insulation, approximately 13 mm (1/2 in) each side.

11. Reinstall wires into protector tube.

NOTE: Always perform a solder on a bigger wire (lower gage).

WIRING HARNESS AND CONNECTORS (850 E-TEC TURBO)

SERVICE TOOLS

Description	Part Number	Page
ECM ADAPTER TOOL	529 036 166	133
ECM TERMINAL REMOVER 2.25	529 036 175	133
ECM TERMINAL REMOVER 3.36	529 036 174	133

SERVICE TOOLS – OTHER SUPPLIER

Description	Part Number	Page
DELPHI TERMINAL EXTRACTOR	12094429	135–136
FCI TERMINAL EXTRACTOR TOOL	54241678	134–135
MOLEX 150 TERMINAL EXTRACTOR TOOL	63813 - 1500	134–135

NOTE: Vehicles may not be equipped with all connectors shown in illustrations.

CHASSIS HARNESS - TRAIL AND CROSSOVER VEHICLES

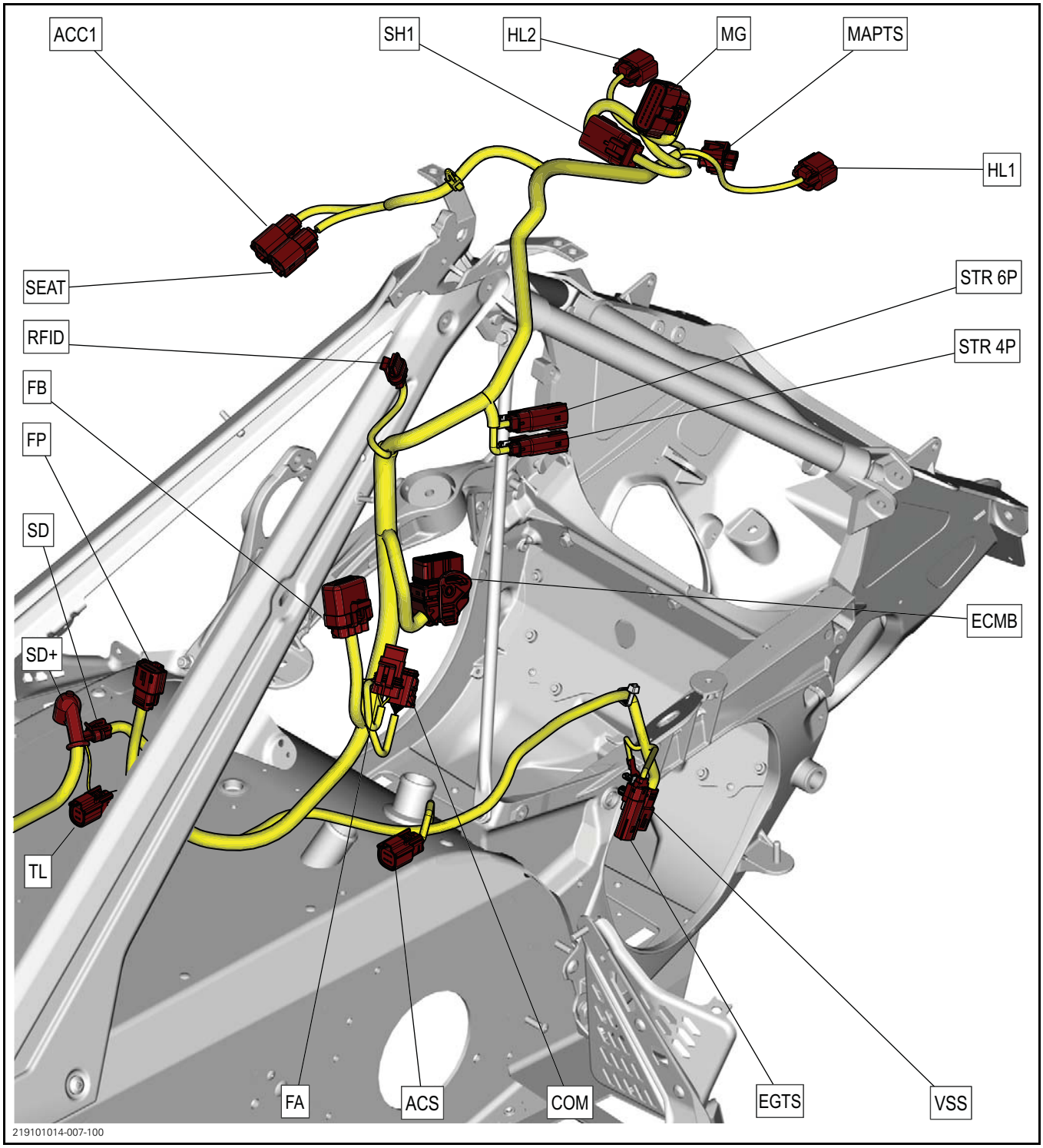

CHASSIS HARNESS - DEEP SNOW VEHICLES

Models Equipped a 850 E-TEC Turbo Engine

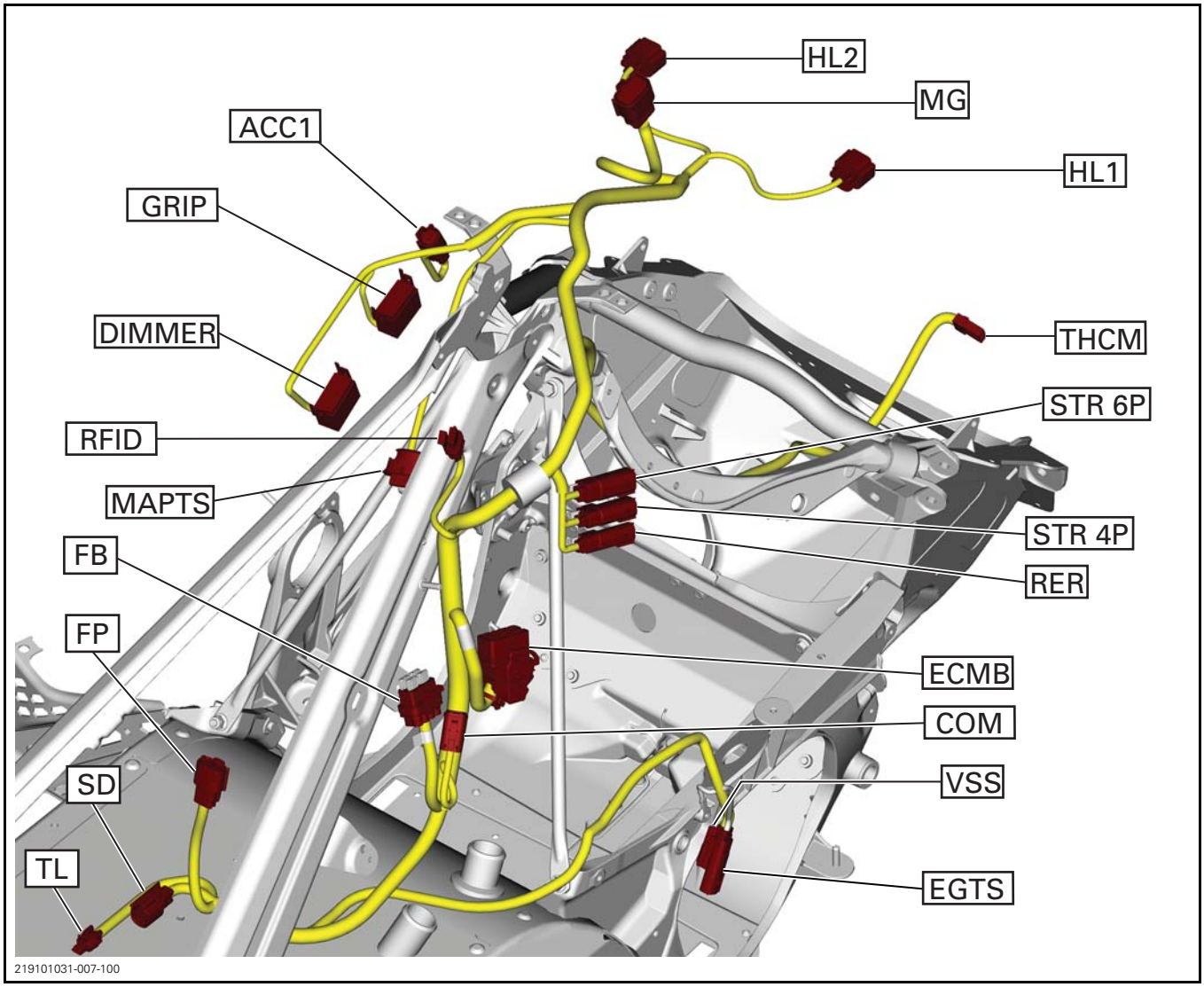

All Other Models

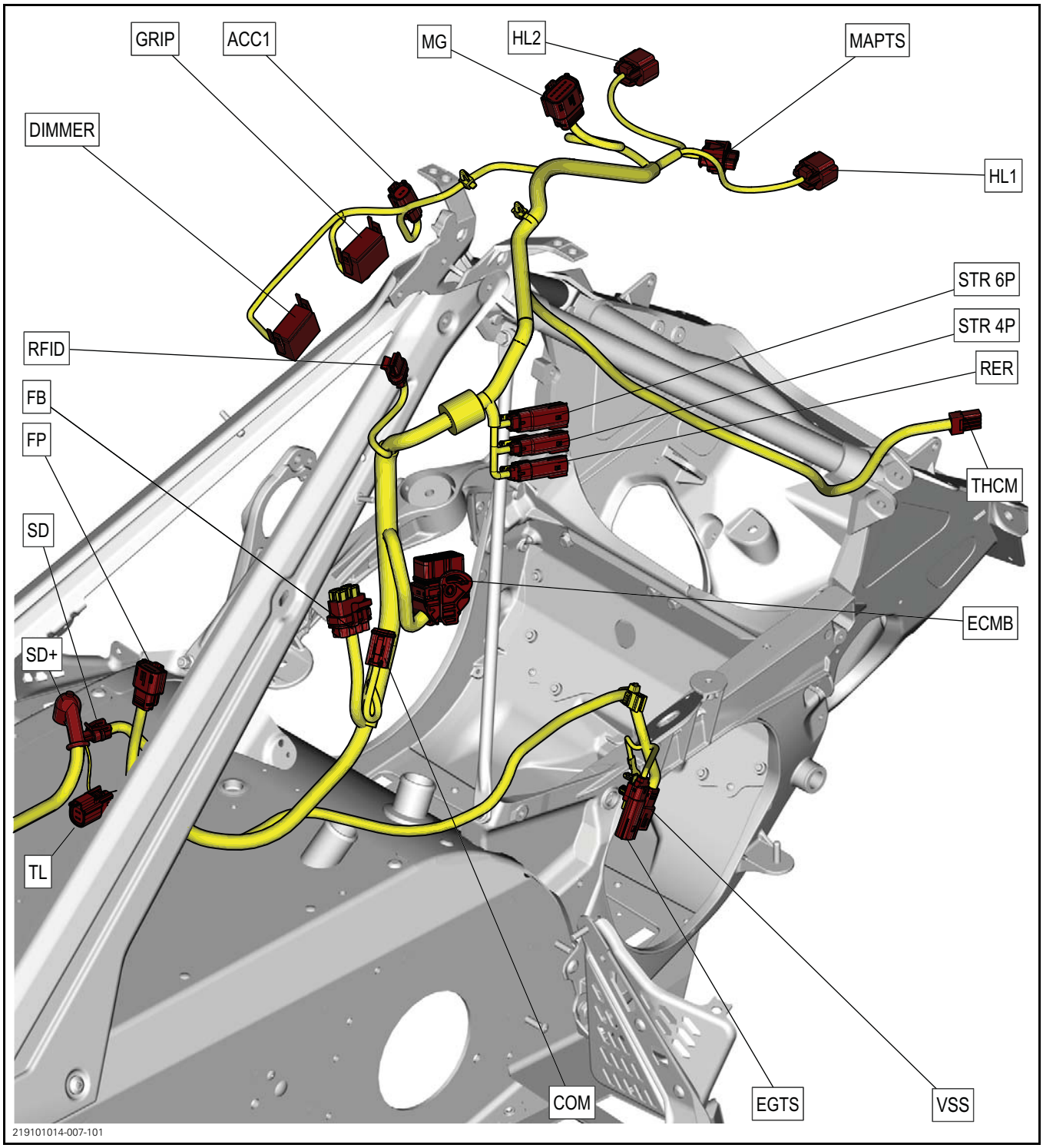

219101014-007-101

CHASSIS HARNESS - UTILITY VEHICLES

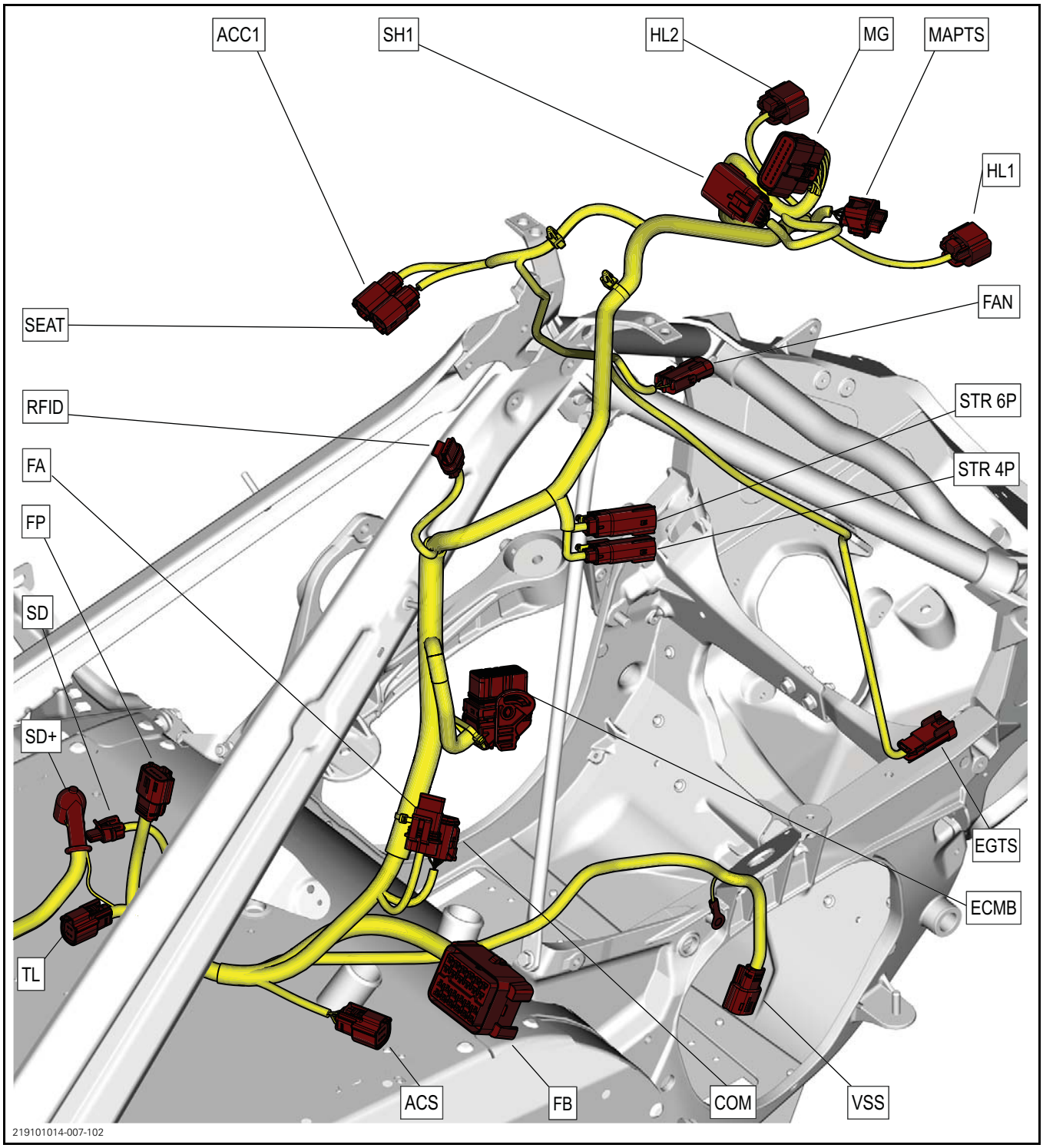

ENGINE HARNESS

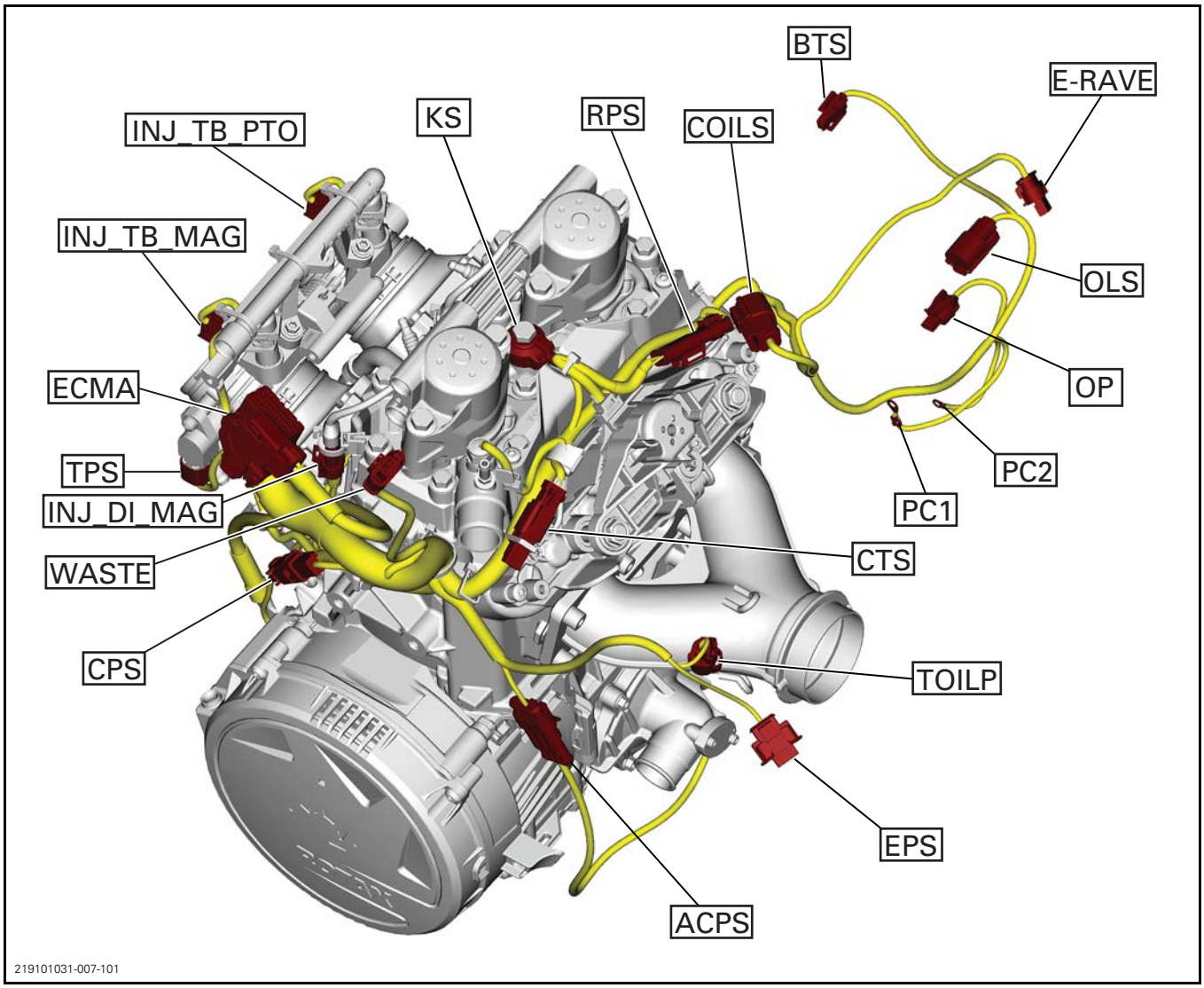

GENERAL

ACRONYMS

ACRONYM	DESCRIPTION	ACRONYM	DESCRIPTION
ACC	Accessory	INJ_TB_MAG	Throttle Body Injector Magneto
ACPS	Absolute Crankshaft Position Sensor	INJ_TB_PTO	Throttle Body Injector PTO
ACS	Air Controlled Suspension	KS	Knock Sensor
BTS	Belt Temperature Sensor	MAG	Magneto
COILS	Ignition Coils	MAPTS	Manifold Air Pressure and Temperature Sensor
COM	Communication	MG	Multifunction Gauge
CPS	Crankshaft Position Sensor	OLS	Oil Level Sensor
CTS	Coolant Temperature Sensor	OP	Oil Pump
DIMMER	Dimmer switch	PC	Oil Pump Feedback Switch
ECMA	ECM connector A (engine harness)	RER	Rotax Electronic Reverse
ECMB	ECM connector B (chassis harness)	RFID	Radio Frequency Identification
EGTS	Engine Gas Temperature Sensor	RPS	RAVE Position Sensor
EPS	Exhaust Pressure Sensor	SD	Starter Solenoid
E-RAVE	RAVE Actuator	SEAT	Heated seat
RPS	Rave Position Sensor)	SH1	Switch Housing 1
FA	Fuse holder	STR	Steering Connector
FAN	Radiator fan	THCM	Thermocouple Module
FB	Fusebox	TL	Tail Light
FP	Fuel Pump	TOILP	Turbo Oil Pump
GRIP	Heater switch	VSS	Vehicle Speed Sensor
HL	HeadLamp	WASTE	Waste Gate
INJ_DI_MAG	Direct Injector Magneto		
INJ_DI_PTO	Direct Injector PTO		

PROCEDURES

⚠ WARNING

When disassembling any connector for repair or replacement on the vehicle, always disconnect the battery to ensure all electrical power is removed and prevent any possibility of a short circuit. Refer to *CHARGING SYSTEM* subsection.

DIAGNOSTIC CONNECTOR (DEUTSCH)

Disassembling and Reassembling the Connector

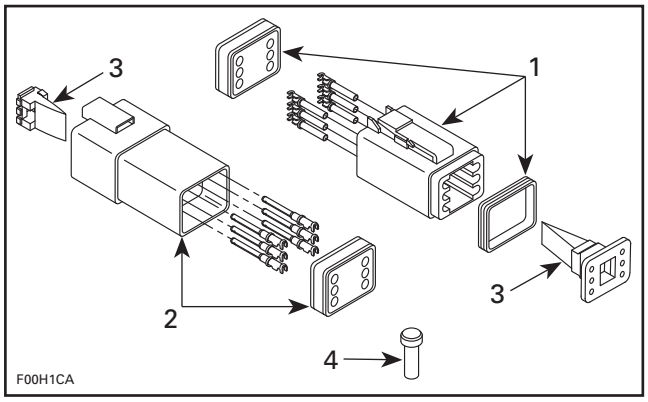

TYPICAL - DEUTSCH CONNECTOR
1. *Male connector*
2. *Female connector*
3. *Secondary lock*
4. *Sealing cap*

NOTICE Do not apply dielectric grease on terminal inside connector.

To remove terminals from connector, proceed as follows:

1. Using long nose pliers, pull out the plastic lock from between the terminals.

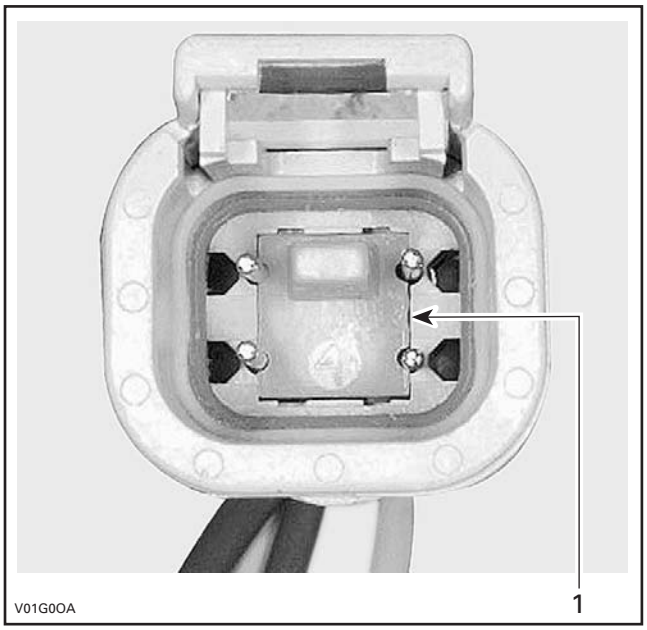

TYPICAL - FEMALE CONNECTOR
1. *Female lock*

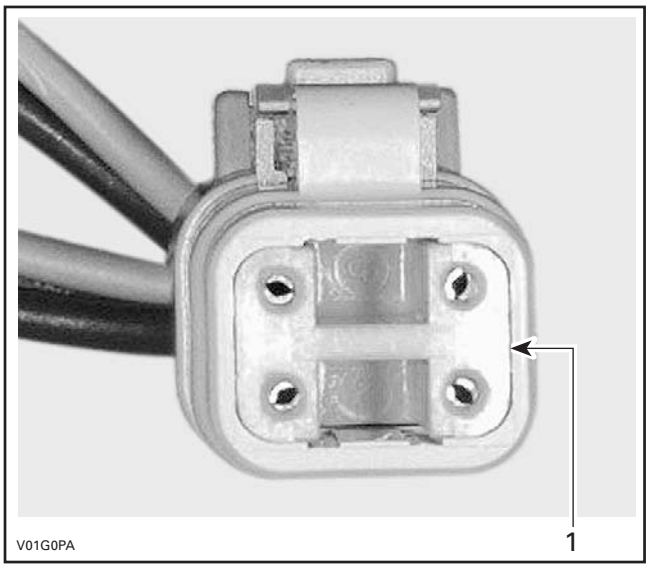

TYPICAL - MALE CONNECTOR
1. *Male lock*

NOTE: Before pin extraction, push wire forward to relieve pressure on retaining tab.

2. Insert a 4.8 mm (.189 in) wide screwdriver blade inside the front of the terminal cavity.
3. Pry the retaining tab away from the terminal while gently pulling the wire and terminal out of the back of the connector.

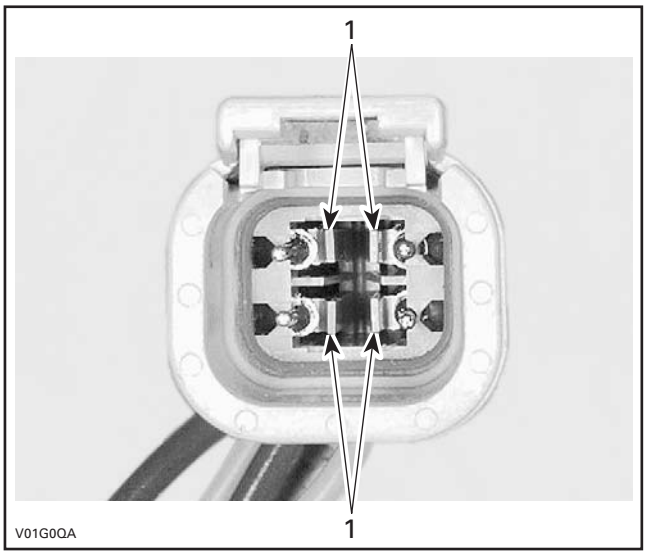

TYPICAL - FEMALE CONNECTOR
1. Retaining tabs

To install:

1. For insertion of a terminal, ensure the plastic lock is removed.
2. Insert terminal through the back of the connector in the appropriate position, and push it in as far as it will go. You should feel or hear the terminal lock engage.
3. Pull back on the terminal wire to ensure the retention fingers are holding the terminal.
4. After all required terminals have been inserted, the lock must be installed.

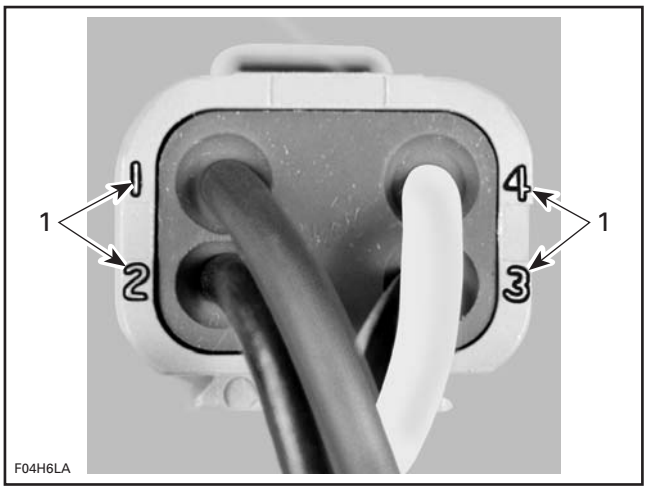

TYPICAL - CONNECTOR PIN-OUT
1. Terminal position identification numbers

ECM CONNECTOR (MOLEX)

There are 2 connectors on the ECM.

The engine wiring harness connector is connected to ECM connector "A". The vehicle wiring harness connector is connected to ECM connector "B".

Each ECM connector has 48 pins however, connectors "A" and "B" are not interchangeable due to their specific keyways.

NOTE: If you need to remove the connector, be sure to not disconnect fuel quick-connector at ECM. If you need to remove the ECM or fuel quick connector, insure the ECM electrical connectors are securely in place and avoid fuel intrusion into connector/seal.

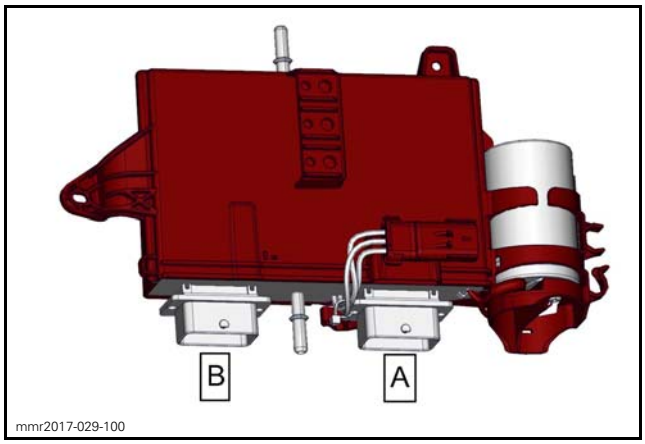

ECM CONNECTORS

Removing the Connector

1. To access the ECM, refer to *ELECTRONIC FUEL INJECTION (EFI)* subsection.
2. Press **and hold** the locking tab on the connector to be disconnected.

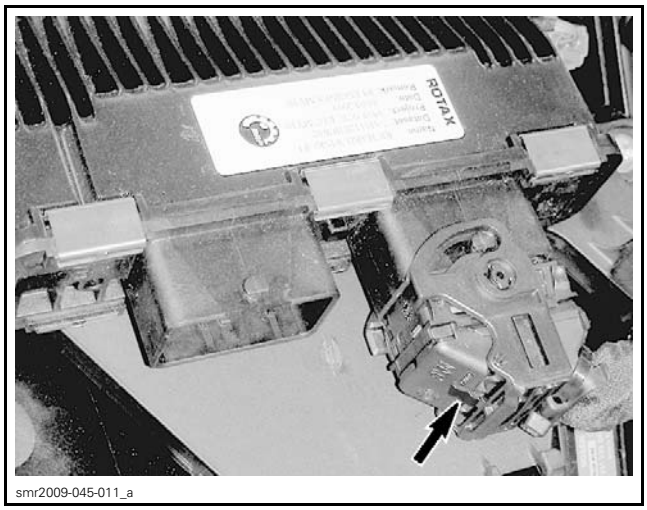

LOCKING TAB TO PRESS AND HOLD

3. As you hold the locking tab, rotate the connector locking cam until it stops.

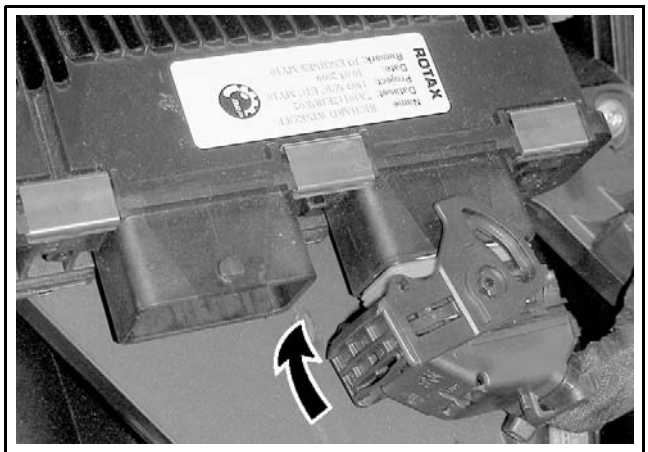

smr2009-045-012_a

CONNECTOR LOCKING CAM ROTATION TO RELEASE

4. Pull connector off ECM.

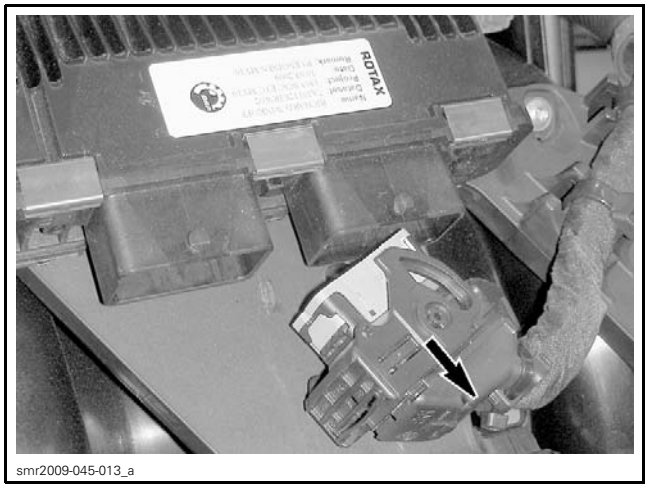

smr2009-045-013_a

Installing the Connector

1. Fully open connector locking cam.

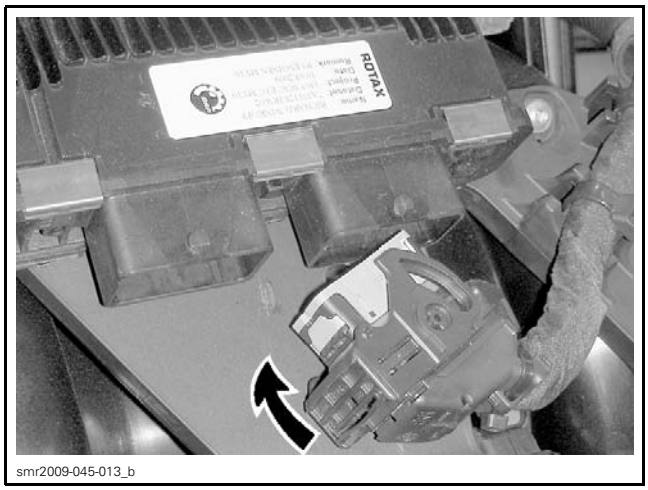

smr2009-045-013_b

CONNECTOR LOCKING CAM IN RELEASE POSITION

2. Insert connector on ECM.
3. As you push the connector onto the ECM, rotate the connector locking cam until it snaps locked.

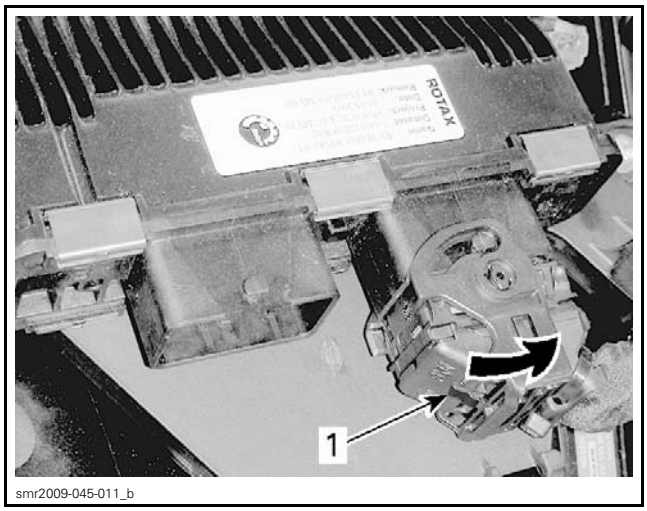

smr2009-045-011_b

1. Locked here

4. Ensure the locking tab is fully out.

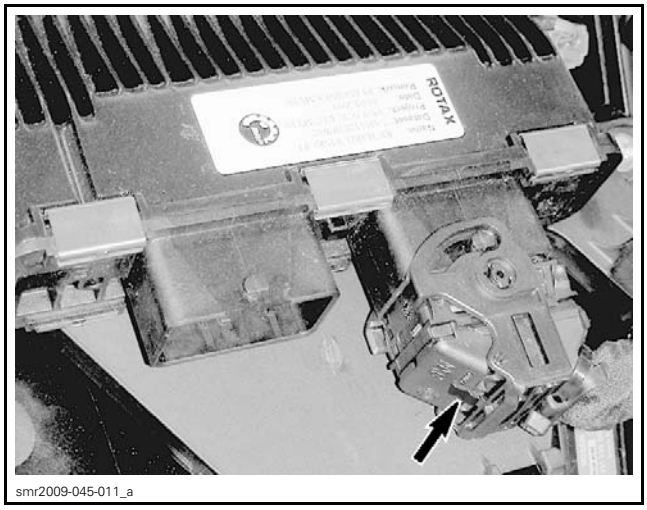

smr2009-045-011_a

LOCKING TAB FULLY OUT

Inspecting the Connector

Before replacing an ECM, always check electrical connections.

1. Ensure connector locking mechanism is functioning properly.
2. Ensure all wire terminals (pins) are properly locked in the connector.
3. Ensure they are very tight, make good contact with the pins in the ECM.
4. Ensure the pins in the harness connector and the ECM connector are clean, shiny and corrosion-free.

NOTE: A "defective ECM module" could possibly be repaired simply by disconnecting and reconnecting it.

NOTICE **Do not apply any lubricant product to the pins of the ECM connector.**

Probing the Connector

The most recommended and safest method to probe the MOLEX (ECM) connector terminals is to use the ECM adapter tool. This tool will prevent deforming or enlarging of the terminals, which would lead to bad ECM terminal contact creating intermittent or permanent problems.

REQUIRED TOOL	
ECM ADAPTER TOOL (P/N 529 036 166)	

1. Disconnect the ECM connector to be probed, and reconnect it on the ECM adapter.
2. Probe wire terminals of the circuit to be tested directly in the adapter holes.

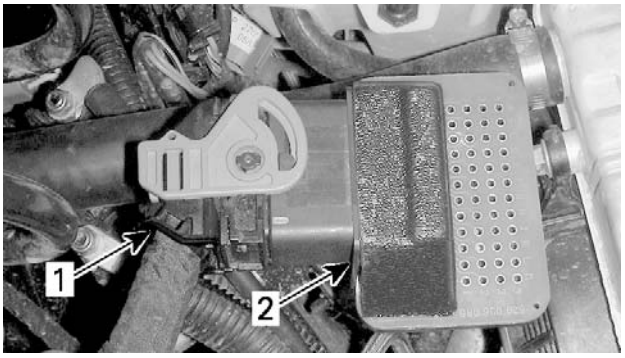

vmr2008-139-016_a

TYPICAL
1. ECM connector
2. ECM adapter

NOTICE **Never probe directly on the ECM harness connector. This could change the shape or enlarge the terminals and create intermittent or permanent contact problems.**

Removing the Connector Terminal (Harness Connector)

To remove a signal terminal from the ECM harness connector, use the ECM terminal remover 2.25.

REQUIRED TOOL	
ECM TERMINAL REMOVER 2.25 (P/N 529 036 175)	

To remove a power terminal, use the ECM terminal remover 3.36.

REQUIRED TOOL	
ECM TERMINAL REMOVER 3.36 (P/N 529 036 174)	

1. Remove rear protector from connector.
2. Pull out the connector lock.

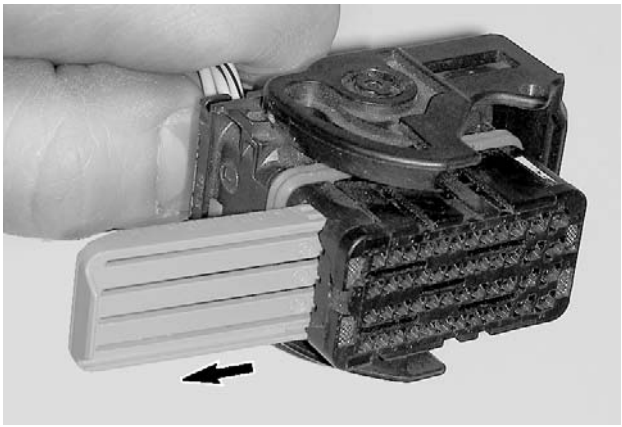
smr2009-045-025_a

3. Insert tool to unlock terminal.

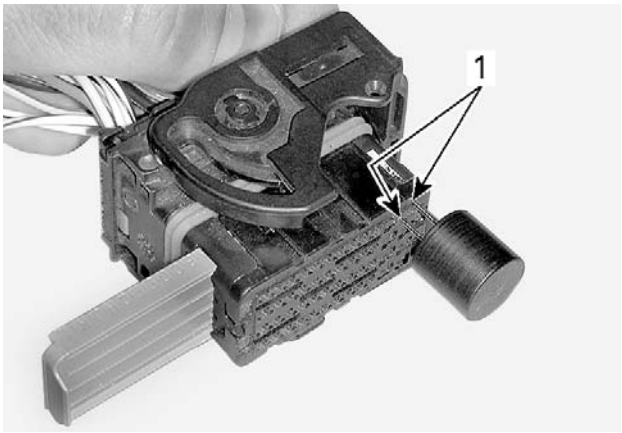

smr2009-045-026_a

1. Unlock here

4. Gently pull on the wire to extract the terminal out the back of the connector.

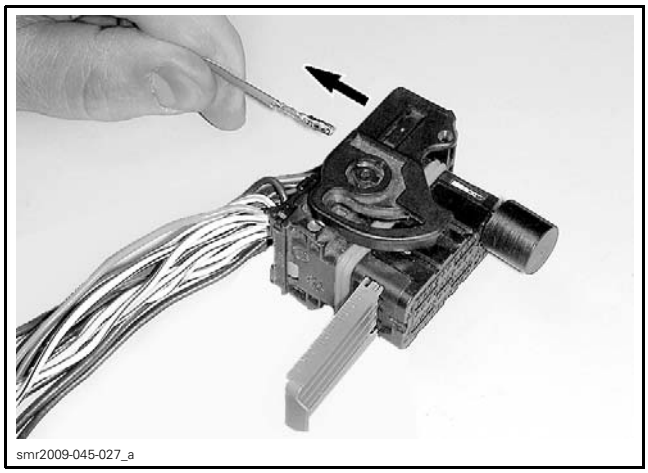
smr2009-045-027_a

NOTICE **Before installing wire terminals in the connector, ensure all terminals are properly crimped on wires. After installation of wire terminals in the connectors, ensure they are properly locked by gently pulling on them as if to extract them.**

MOLEX CONNECTORS (EXCEPT ECM)

Extracting a Terminal (Female Connector)

The same procedure must be done to remove a seal plug.

1. Insert a small flat screwdriver in the pry holes of the terminal locator, on the terminal side of the connector.

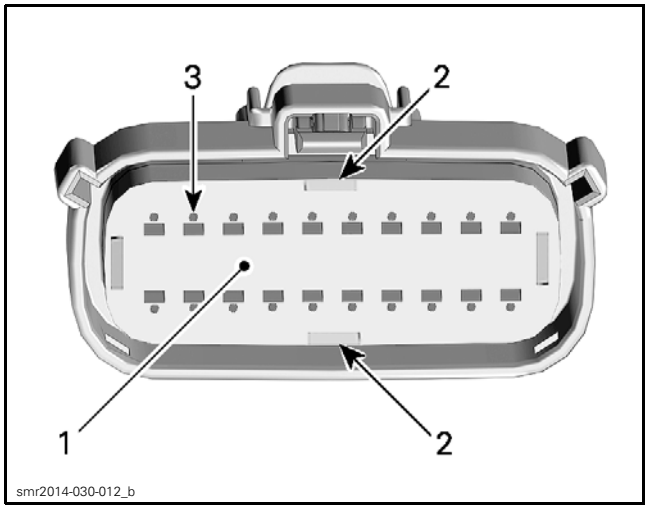

smr2014-030-012_b

1. Terminal locator
2. Pry holes
3. Holes for inserting terminal extractor tool

2. Apply slight pressure and pry the terminal locator out until it clicks (± 4 mm (.16 in)).

NOTE: Do not remove the terminal locator from the connector housing.

3. Insert the extractor tool in the small hole adjacent to the terminal.

NOTE: Push the extractor tool in only as far as required to release the lock from the terminal. The tool should slide along the terminal and be inserted between the connector housing and the terminal lock.

REQUIRED TOOL	
FCI TERMINAL EXTRACTOR TOOL (P/N 54241678)	
or,	
MOLEX 150 TERMINAL EXTRACTOR TOOL (P/N 63813 - 1500)	

4. Gently pull on the wire to extract the terminal out the back of the connector.

Extracting the Terminal (Male Connector)

The same procedure must be done to remove a seal plug.

1. Using a pair of thin long nose pliers, pull the terminal locator (the white plastic insert in the connector) out to the detent position (± 13 mm (1/2 in) between terminal locator and connector housing face). This will allow unlocking of the pins.

NOTICE **Do not attempt to remove the terminal locator or damage will occur. Be careful not to bend the pins when using the pliers.**

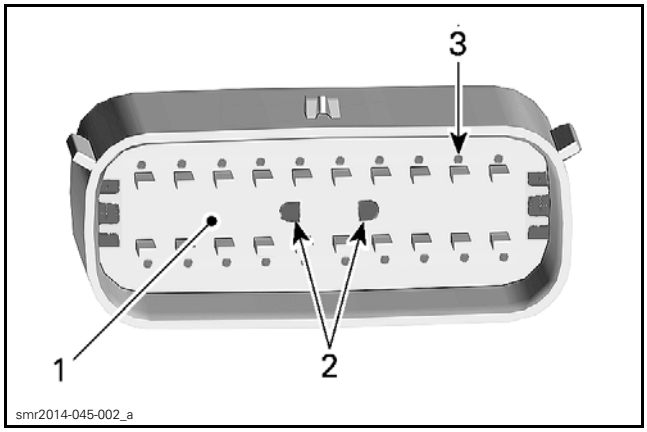

smr2014-045-002_a

1. Terminal locator
2. Insert long nose pliers here
3. Holes for inserting terminal extractor tool

2. Insert the extractor tool in the small hole adjacent to the terminal.

NOTE: Push the extractor tool in only as far as required to release the lock from the terminal. The tool should slide along the terminal and be inserted between the connector housing and the terminal lock.

REQUIRED TOOL	
FCI TERMINAL EXTRACTOR TOOL (P/N 54241678)	
or,	
MOLEX 150 TERMINAL EXTRACTOR TOOL (P/N 63813 - 1500)	

3. Gently pull on the wire to extract the terminal out the back of the connector.

Inserting the Terminal

1. Ensure the terminal is properly crimped onto the wire.
2. Ensure the terminal locator (the white plastic insert in the connector) is out in the detent position.
3. Orient the key on the back of the male terminal with the keyway on the rear of the housing

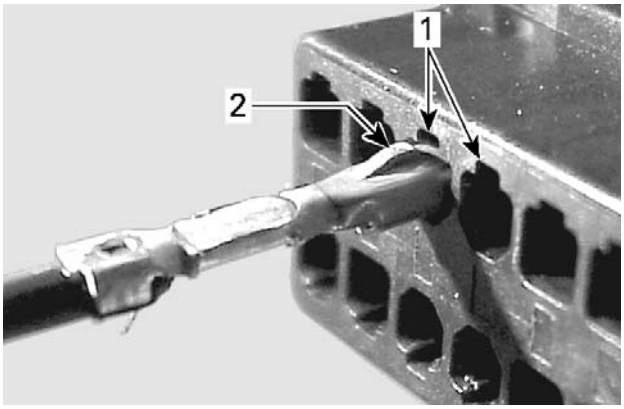

smr2014-045-004_a

TYPICAL - PIN INSERTION
1. Keyway
2. Terminal key

4. Push the terminal into the housing until it clicks.
5. Gently pull on the terminal to ensure it is properly locked.
6. Repeat previous steps for each terminal to be inserted.
7. Push the terminal locator into the connector to the locked position.

DELPHI/PACKARD CONNECTORS

Removing the Connector Terminal

To remove a terminal (pin) from the connector, use a special tool such as the Delphi terminal extractor.

REQUIRED TOOL	
DELPHI TERMINAL EXTRACTOR (P/N 12094429)	

NOTE: Grinding the tool end to a taper is required.

1. Carefully insert the tool in the space provided to release the pin lock.
2. Push the pin out the front of the connector by pushing on the wire.

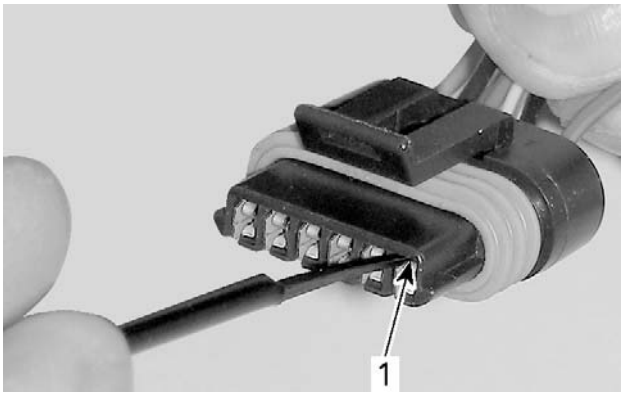

smr2009-045-014_a

1. Unlock terminal here

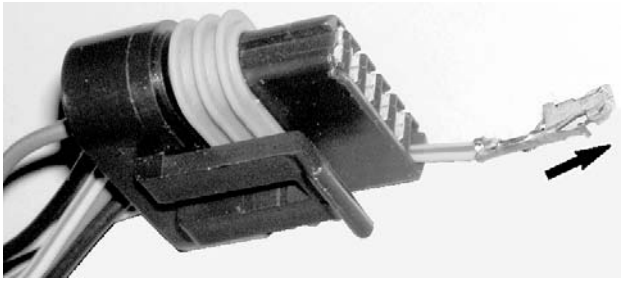
smr2009-045-015_a

NOTICE **Before installing terminals in the connectors, ensure all terminals are properly crimped on the wires. After installation of the wire terminals in the connectors, ensure they are properly locked by gently pushing on them as if to extract them.**

DELPHI CONNECTORS

Removing the Terminal

1. To remove a terminal from connector, first remove the locking cap.

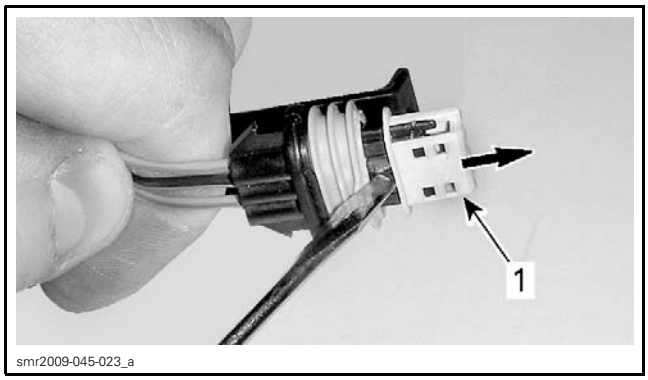

1. Pry out locking cap

2. Carefully insert the Delphi terminal extractor in the space provided to release the pin lock.

REQUIRED TOOL	
DELPHI TERMINAL EXTRACTOR (P/N 12094429)	

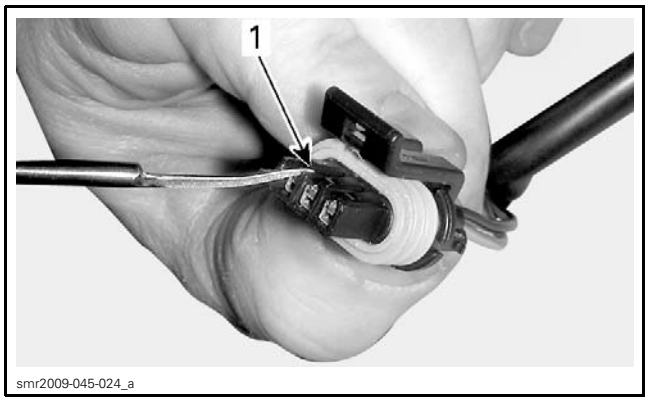

1. Unlock here

3. Gently pull on the wire to extract the pin out the back of the connector.

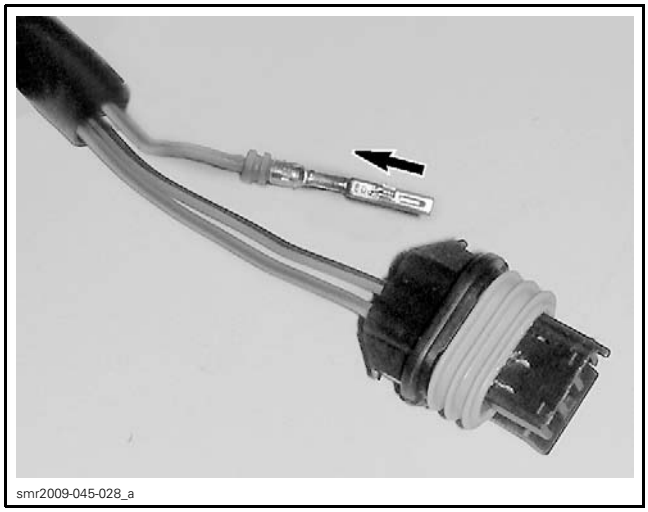

NOTICE Before installing terminals in the connectors, ensure all terminals are properly crimped on the wires. After installation of the wire terminals in the connectors, ensure they are properly locked by gently pushing on them as if to extract them.

BATTERY CABLES

Crimping the Battery Cable

Carefully strip the wire approximately to 10 mm (3/8 in) in length, using a wire stripping tool or sharp blade/knife.

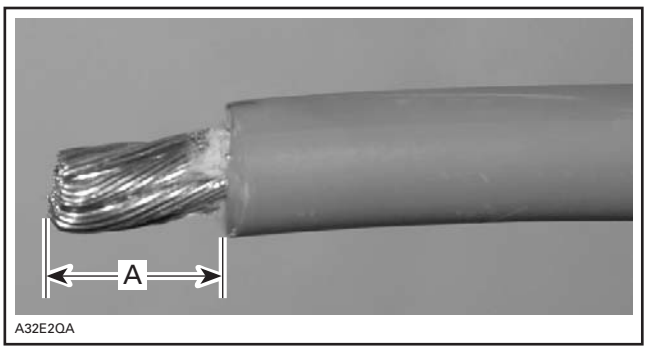

A. 10 mm (3/8 in)

NOTE: Make sure not to cut wire strands while stripping the wire.

Install the appropriate terminal on the wire according to the requirement. Refer to appropriate *PARTS CATALOG*.

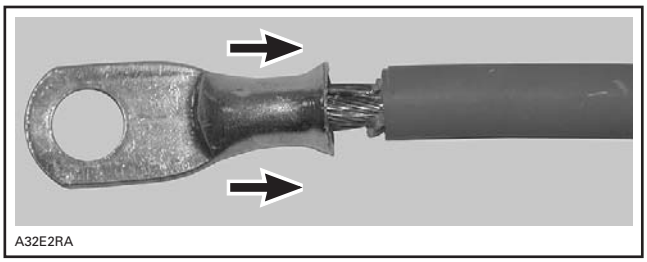

INSTALLATION OF TERMINAL

Follow the instructions provided with the crimping tool to select the proper position of the tool.

NOTE: Different wires require different crimping pliers settings, so make sure to follow the instruction supplied with the tool.

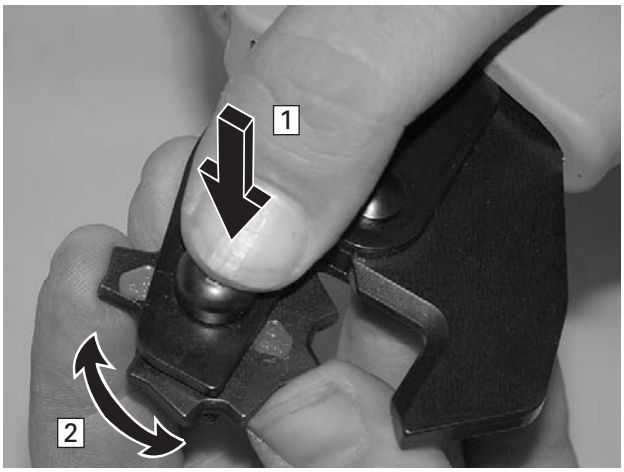

A32E2SA

POSITIONING THE CRIMPING PLIERS
Step 1: Press
Step 2: Rotate

After positioning the crimping pliers, crimp the terminal already installed on wire.

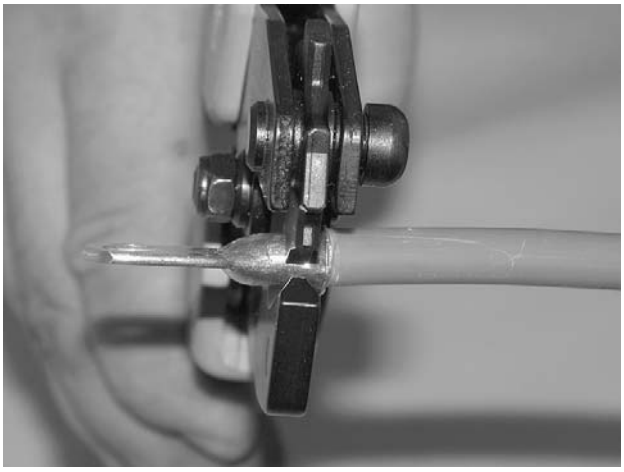
A32E2TA

CRIMPING OF WIRE

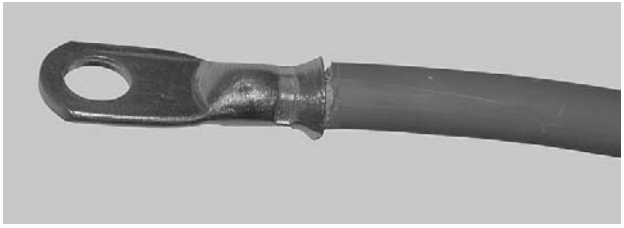
A32E2UA

PROPERLY CRIMPED WIRE

To verify, if the wire is properly crimped, apply some pulling force on wire and the terminal at the same time from both directions.

NOTICE **Never weld the wire to the terminal. Welding can change the property of the wire and it can become brittle and break.**

Install the protective heat shrink rubber tube on the terminal. Heat the heat shrink rubber tube using the heat gun so that it grasps the wire and the terminal.

NOTICE **Make sure that the protective heat shrink rubber tube has been properly installed and no part of wire is exposed.**

SPLICES REPAIR PROCEDURE

CASE 1: Wire Detached from Splice

NOTICE **Repairs described in this section should never be performed on harness sections that can be exposed to water.**

1. Locate splice. Refer to splices location diagrams.
2. Remove wires from protector tube.
3. Locate the shrink tube protecting the defective splice.

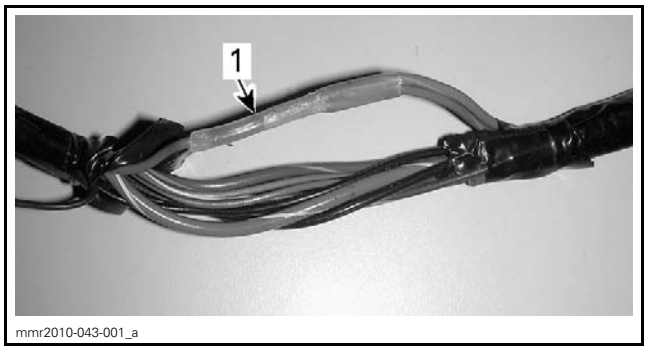

mmr2010-043-001_a

1. Shrink tube

4. Remove the shrink tube.
   4.1 Using a blade, cut the shrink tube.


mmr2010-043-002

NOTICE **Be careful with the blade to avoid cutting wires insulation.**

   4.2 Slightly heat the shrink tube using a heat gun.

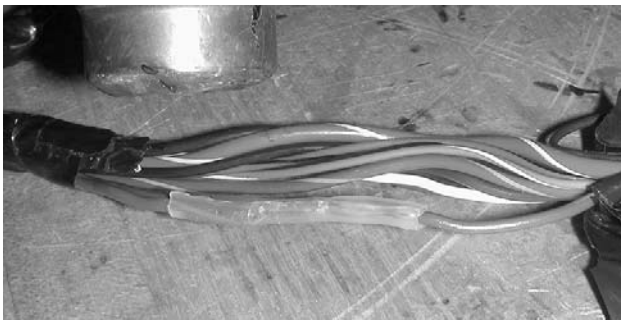

mmr2010-043-003

4.3 Remove the shrink tube with long nose pliers.

5. Locate detached wire from splice.

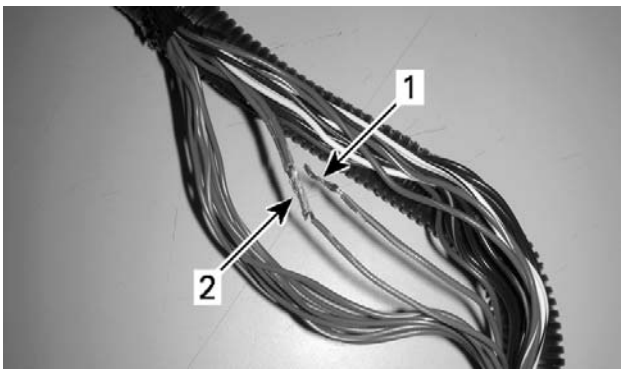

mbg2008-021-116_a

1. Detached wire
2. Splice

6. Twist detached wire around splice.

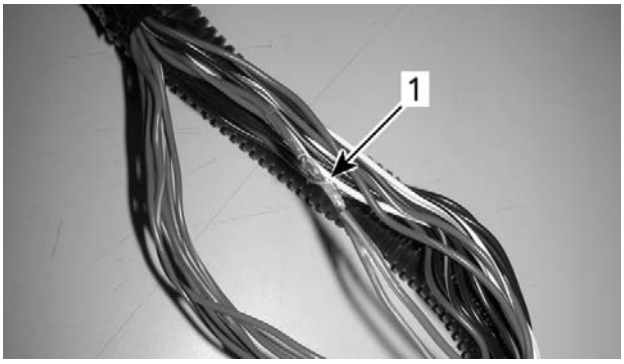

mbg2008-021-117_a

1. Twisted wire

7. Perform a tin solder on twisted wire.
8. Apply electrical tape to cover splice.

NOTE: Make sure tape overlaps on wire insulation, approximately 13 mm (1/2 in) each side.

9. Reinstall wires into protector tube.

CASE 2: Wire Broken from Splice

NOTICE Repairs described in this section should never be performed on harness sections that can be exposed to water.

1. Locate splice. Refer to splices location diagrams.
2. Remove wires from protector tube.
3. Locate the shrink tube protecting the defective splice.

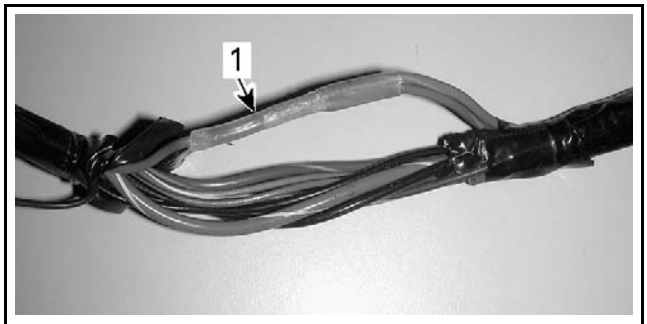

mmr2010-043-001_a

1. Shrink tube

4. Remove the shrink tube.

4.1 Using a blade, cut the shrink tube.

mmr2010-043-002

NOTICE Be careful with the blade to avoid cutting wires insulation.

4.2 Slightly heat the shrink tube using a heat gun.

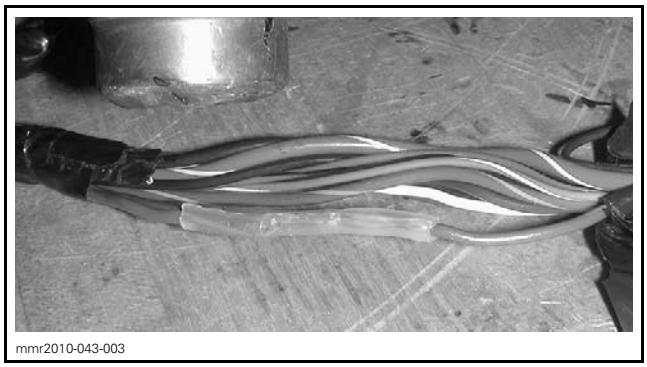

mmr2010-043-003

4.3 Remove the shrink tube with long nose pliers.

5. Locate broken wire from splice.

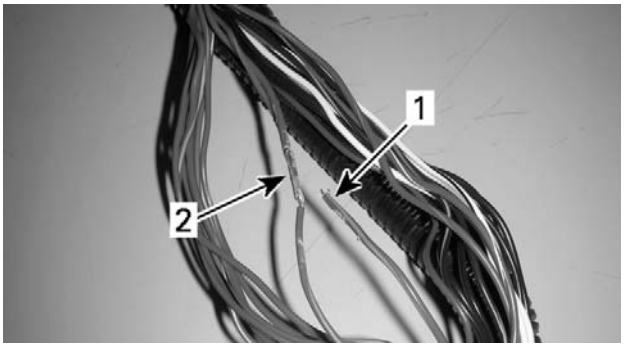

1. Broken wire
2. Splice

6. Strip wire insulation at the end of broken wire.
7. Strip wire insulation below the splice.

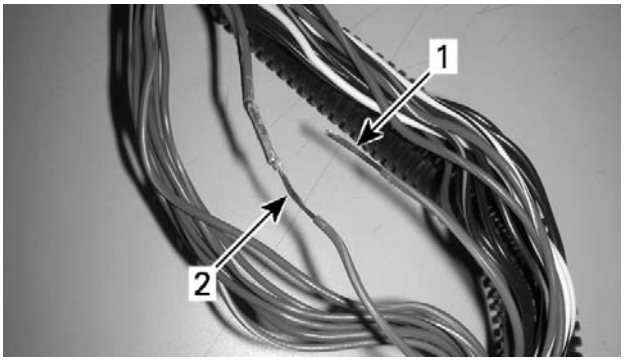

1. Broken wire stripped
2. Splice wire stripped

8. Twist wire around stripped wire.

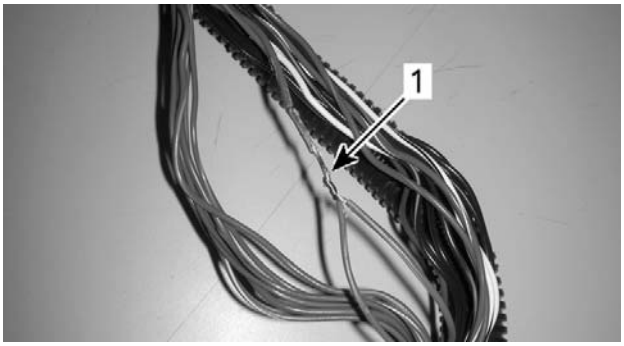

1. Twisted wire

9. Perform a tin solder on twisted wire.
10. Apply electrical tape to cover splice.

NOTE: Make sure tape overlaps on wire insulation, approximately 13 mm (1/2 in) each side.

11. Reinstall wires into protector tube.

NOTE: Always perform a solder on a bigger wire (lower gage).

CHARGING SYSTEM

SERVICE TOOLS

Description	Part Number	Page
12 V BATTERY SUPPLY CABLE	529 035 997	144
FLUKE 115 MULTIMETER	529 035 868	145, 147
POWER INTERFACE	515 177 223	144

SERVICE TOOLS – OTHER SUPPLIER

Description	Part Number	Page
NAPA ULTRA PRO BATTERY LOAD TESTER	95260	143

GENERAL

⚠ WARNING

Unless otherwise specified, always disconnect the magneto connector and ensure spark plugs are installed on the engine before carrying out electrical system checks. Should the engine be made to rotate with magneto connected, a spark may occur resulting in electrical shock, a fire, or an explosion.

SYSTEM DESCRIPTION

12V System Capacity

12V SYSTEM CAPACITY	
Over 2000 RPM	30 A
1200 RPM (Idle)	25 A

Magneto

A magneto provides the primary source of electrical energy. It transforms a magnetic field into an alternating current (AC).

The magneto stator is wired with a 3 phase star configuration winding.

AC current is rectified and regulated by a voltage regulator/rectifier circuit within the ECM to provide 55 volts for engine component operation. It is then converted into 14.5 volts by a DC to DC converter for vehicle operation.

TROUBLESHOOTING

NOTE: It is good practice to check for fault codes using B.U.D.S. as a first troubleshooting step. Refer to *DIAGNOSTIC AND FAULT CODES*.

TROUBLESHOOTING GUIDELINES

Low or No System Voltage (Engine May Not Start)

The vehicle cannot start without having a minimum voltage to the 55 V power circuit. If the engine does not start, see *VOLTAGE REGULATOR/RECTIFIER* in this subsection and test the Vdc Output using BUDS2

If voltage is not as specified, check the following items in the recommended order until you find the fault:

- Stator (refer to *MAGNETO* subsection)
- Capacitor (see procedure in this subsection).

NOTE: The 55 Vdc may be unstable or unobtainable if the capacitor is faulty, not connected, or incorrectly connected.

If the above mentioned checks were good, isolate each of the following components by disconnecting them individually, and repeating the voltage test after each one.

- Each injector
- Each ignition coil
- Fuel pump
- Oil injection pump.

NOTE: When the 55 Vdc test good after a component is disconnected, replace that component and repeat the test.

PROCEDURES

Ensure battery is fully charged (if applicable).

Refer to *WIRING HARNESS AND CONNECTORS* subsection for harness layout and connector locations on vehicle.

Refer to appropriate *WIRING DIAGRAM* for additional information.

The magneto is covered in *MAGNETO AND STARTER* subsection.

⚠ WARNING

Ensure vehicle cannot move when performing charging system tests with the engine running.

BATTERY

Charging Battery

Initial Charging

Sealed VRLA batteries require an initial charge before being used in the vehicle.

NOTE: Since batteries state of charge need to be checked 3 months after their manufacturing date or their last charge, it is highly recommended to check the batteries of all newly arrived vehicles. Consult the "Identification of reminder sticker" section and battery chart on last page.

If you are using a constant current charger, refer to the standard (STD) charging method printed on the battery.

For YTX20HL batteries (18.9 AH), the initial charge must be 1.8 A for 5 - 10 hours.

mbs2014-002-200_a

YTX20HL CHARGING METHOD

If you are using an automatic type taper charger, check to make sure that the charger current (amps) is equal to or greater than the standard charging method listed on the battery.

If the battery gets very hot to the touch, cease charging and allow battery to cool down for 6 to 12 hours. Check voltage using a voltmeter. A fully charged, battery should be 12.8 volts or higher after the battery has been off the charger 1-2 hours. If less, it needs additional charge.

Routine Charging

NOTICE **Overcharging can harm the battery beyond recovery.**

The single most important thing to maintaining a VRLA battery is to not let it sit discharged: keep it fully charged for peak performance.

Use the following guidelines for charging. Always verify battery state of charge before charging, and 30 minutes after charging.

It is not recommended to overcharge sealed VRLA batteries. Because of their characteristics, too much charging will decrease the volume of electrolyte. The longer the overcharge time, the greater the drop in electrolyte – and starting power.

Refer to the following tables for charging routine.

Note that charging times can vary depending on type of charger. Follow the manufacturer's instructions for details.

STATE OF CHARGE : 100%		
VOLTAGE	ACTION	CHARGE TIME
12.8 – 13.0	Check in 3 months or when vehicle is sold***	None required
*** Identify battery as being checked on "date" or needs to be rechecked at "date"		

STATE OF CHARGE : 75% - 100%		
VOLTAGE	ACTION	CHARGE TIME *
12.5 – 12.8	May need slight charge. If no charge given, check in 3 months or when vehicle is sold***	3 – 6 hours
* Using a constant current charger at standard amps specified on the battery		
*** Identify battery as being checked on "date" or needs to be rechecked at "date"		

STATE OF CHARGE : 50% - 75%		
VOLTAGE	ACTION	CHARGE TIME *
12.0 – 12.5	Need charge. Check in 3 months or when vehicle is sold***	5 – 11 hours
* Using a constant current charger at standard amps specified on the battery		
*** Identify battery as being checked on "date" or needs to be rechecked at "date"		

STATE OF CHARGE : 25% - 50%		
VOLTAGE	ACTION	CHARGE TIME *
11.5 – 12.0	Need charge. Check in 3 months or when vehicle is sold***	At least 13 hours verify state of charge
* Using a constant current charger at standard amps specified on the battery		
*** Identify battery as being checked on "date" or needs to be rechecked at "date"		

STATE OF CHARGE : 0% - 25%		
VOLTAGE	ACTION	CHARGE TIME *
11.5 or less (see instructions below)	Need charge. Check in 3 months or when vehicle is sold***	20 hours
* Using a constant current charger at standard amps specified on the battery		
*** Identify battery as being checked on "date" or needs to be rechecked at "date"		

Charging for Voltage of 11.5 V or Less

Batteries with voltage below 11.5 V may require special equipment and procedures to recharge.

In charging an over discharged battery having a terminal voltage of 11.5 V or lower, its internal resistance may be too high to charge at a normal charge voltage.

Therefore, it may be necessary to raise the voltage of the battery initially (20 V as a maximum), and charge for approximately 5 minutes. If the ammeter shows no change in current after 5 minutes, you need a new battery.

Current flowing into the battery at high voltage can become excessive. Monitor amperage and adjust voltage as necessary to keep current at the battery's standard amp rating. Charge for approximately 20 hours.

Testing Battery

Battery Load Test

1. Connect a battery load tester such as the NAPA ULTRA PRO BATTERY LOAD TESTER (P/N 95260).
2. Ensure proper test conditions.

TEST CONDITIONS	
Initial battery voltage‡	Above 12.5 Vdc
Engine	OFF
Load	3 times the amp-hour (AH) rating
Time	15 seconds
‡ Required for accurate testing	

SPECIFICATION	
Battery	Above 9.6 Vdc

If battery voltage drops below specification during test, replace battery and test charging system.

Removing Battery

1. Remove seat.
2. Remove battery cover.

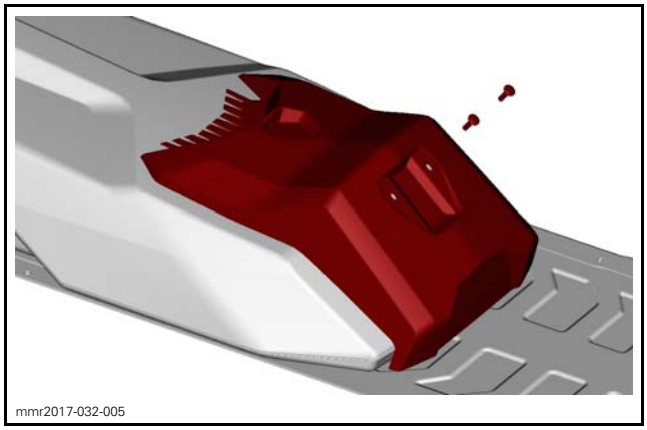
mmr2017-032-005

3. Disconnect negative before positive terminal.

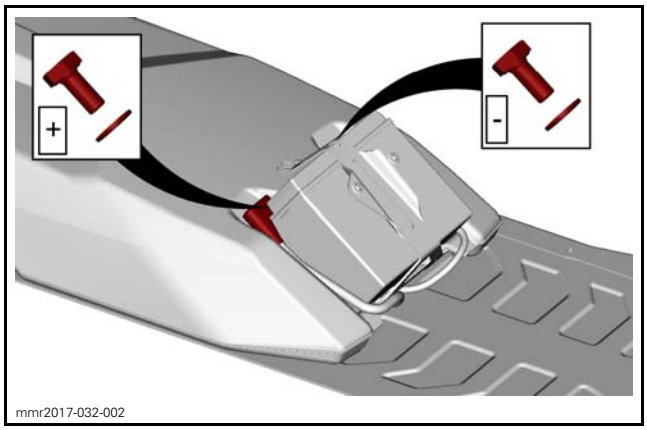

mmr2017-032-002

4. Remove battery hold down bracket.

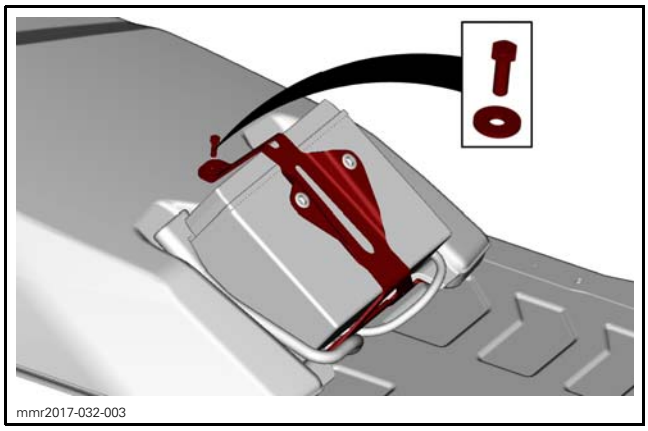
mmr2017-032-003

5. Remove battery.

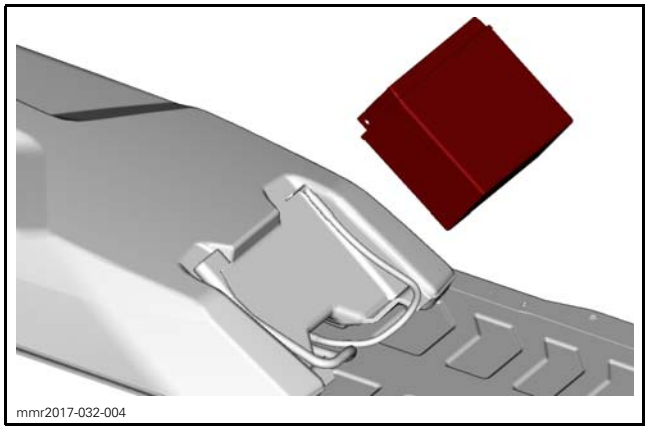
mmr2017-032-004

Installing Battery

TIGHTENING TORQUE	
Battery terminals (positive and negative)	10 N•m ± 2 N•m (89 lbf•**in** ± 18 lbf•**in**)
Battery hold down bracket	5 N•m ± 0.5 N•m (44 lbf•**in** ± 4 lbf•**in**)
Battery cover retaining screws	7 N•m ± 1 N•m (62 lbf•**in** ± 9 lbf•**in**)

VOLTAGE REGULATOR/ RECTIFIER

Description

The voltage regulator/rectifier is integrated within the ECM. It receives alternating current (AC) from the magneto which it rectifies and regulates to 55 Vdc.

On a single pull start with the engine between 250 and 500 RPM, the magneto, is capable of producing 30-40 Vdc.

55 Vdc Output

ECMB CONNECTOR
pins M1, M2, M4

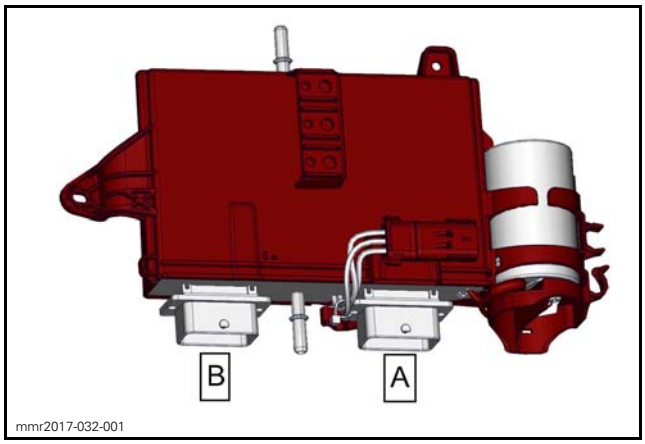

mmr2017-032-001

Testing Continuity (Voltage Regulator/Rectifier)

Due to internal circuitry, there is no static test available to check continuity.

Testing 55 Vdc Voltage Output with B.U.D.S. (Voltage Regulator/Rectifier)

1. Raise vehicle so that the track is off the ground and can turn freely.

⚠ WARNING

Ensure vehicle track is completely raised off ground. If the track should come into contact with the ground when the engine is at 5000 RPM, equipment damage and severe injury may result.

2. Remove RH side panel, refer to *BODY* subsection.

Procedure When Engine Cannot be Started

1. Install the following tools to supply power to the 12 Vdc circuits for this test. Refer to *COMMUNICATION TOOLS AND B.U.D.S.* subsection for proper connections.
   – POWER INTERFACE (P/N 515 177 223)
   – 12 V BATTERY SUPPLY CABLE (P/N 529 035 997)
   – 12 volts battery.
2. Select the **Measurements** page.
3. Read the voltage on the **55V System Circuit** meter in B.U.D.S. as the engine is turning over.

55 VDC VOLTAGE OUTPUT TEST	
TEST ENGINE SPEED	VOLTAGE
Pull start (engine not running)	At least 30 Vdc

If you cannot obtain the specified voltage, refer to *TROUBLESHOOTING* in this subsection and carry out the required tests.

Also carry *TESTING VOLTAGE REGULATOR/RECTIFIER GROUND CIRCUIT* in this subsection.

Procedure with Engine Running

1. Connect vehicle to the applicable B.U.D.S. software version, refer to *COMMUNICATION TOOLS AND B.U.D.S.* subsection.
2. Start engine.
3. Select the **Measurements** page.
4. Read the voltage on the **55 V System Circuit** meter in B.U.D.S.

55 VDC VOLTAGE OUTPUT TEST (ENGINE RUNNING)	
TEST ENGINE SPEED	VOLTAGE
Any RPM from idle and above	55 Vdc ± 2

If voltage is below or above specification, refer to *TROUBLESHOOTING* in this subsection and carry out the required tests.

Also test the ECM ground circuit.

Testing ECM Ground Circuit

1. Disconnect the ECMA connector.
2. Test ground circuit continuity as follows.

ECM GROUND CIRCUIT		
Black wire of capacitor	ECMA Connector Pins L3, L4, M3, M4	Continuity
Black wire of capacitor	Chassis ground	Continuity

DC-DC CONVERTER

System voltage (12 Vdc) is explained in *POWER DISTRIBUTION AND GROUNDS* subsection.

12 Vdc Output Voltage Tests (DC-DC Converter)

12 VDC OUTPUT VOLTAGE	
OUTPUT	CONNECTOR - -PIN
Primary 12 Vdc	COM - 6
Secondary 12 Vdc	COM - 5

Testing Primary 12 Vdc Circuit with B.U.D.S.

1. Start engine.
2. Turn off any accessories.
3. Disconnect any external batteries.
4. Select the **Measurements** page.
5. Read the voltage on the **Primary 12 V Circuit** meter in B.U.D.S.

PRIMARY 12 VDC CIRCUIT TEST WITH B.U.D.S.	
TEST ENGINE SPEED	VOLTAGE
Any RPM from idle and above	14.5 ± 0.5 Vdc

If voltage is above specification, replace ECM.

If voltage is below specification, check the *PRIMARY 12 VDC CIRCUIT*

Also test the ECM ground circuit (voltage regulator/rectifier).

Install all removed parts and connectors.

Secondary 12 Vdc Circuit Test

The secondary 12 Vdc system is not monitored in B.U.D.S.

To test it, carry out the following procedure.

1. Remove RH side panel to expose the fuse(s). Refer to *BODY*.
2. Set FLUKE 115 MULTIMETER (P/N 529 035 868) to Vdc scale.
3. Start the engine.
4. Unplug battery (if applicable)
5. Probe the COM connector as follows.

12 VDC OUTPUT VOLTAGE	
OUTPUT	CONNECTOR - -PIN
Secondary 12 Vdc	COM - 5

SECONDARY 12 VDC CIRCUIT TEST	
TEST ENGINE SPEED	VOLTAGE
Any RPM from idle and above	14.5 ± 0.5 Vdc

If voltage cannot be measured, test continuity of wire from COM-5 to ECMB pins L1, L2, and L3.

If the wire continuity is good and other voltages from ECM tested good, ECM may not output secondary 12 Vdc.

Test the *VOLTAGE REGULATOR/RECTIFIER GROUND CIRCUIT*. If the ground circuit tests good, the ECM will need to be replaced.

NOTE: Before replacing ECM, all ECM grounds, power output circuits, and input circuits from the magneto must be tested.

Repair or replace as applicable.

CAPACITOR

The fuel injectors, which require a stable 55 Vdc for their operation, are particularly sensitive to voltage variations. A capacitor is connected to the 55 Vdc electrical system to stabilize the system voltage.

The capacitor is located next to the ECM on the RH side of the vehicle.

Quick Troubleshooting

A faulty capacitor will lead to the following symptoms:

- Unstable, low, or no system voltage (55 V).
- Engine will not start
- Engine hard to start
- Poor idling
- Engine misfiring.

NOTE: A defective capacitor is likely to give off a burning like odor.

Discharging Capacitor

⚠ WARNING

The capacitor remains charged approximately 10 seconds after engine is stopped. A high energy could suddenly be discharged if capacitor terminals were shorted. Always discharge capacitor before servicing.

To properly discharge capacitor, leave it connected for at least 5 minutes after engine has been stopped, or after engine was last cranked before carrying out any maintenance procedure on the capacitor or 55 volt electrical system.

Testing Capacitor Charge Hold

Procedure Setup

1. Remove capacitor from vehicle. Refer to *REMOVING CAPACITOR* in this subsection
2. Work on a non metallic workbench.
3. Connect the following items to the capacitor. See following illustration.
   - A switch
   - Resistor (300 Ω/5 W)
   - 12 V battery (fully charged).

NOTICE **Ensure the test switch is in the OFF position when connecting the battery to the capacitor to prevent sparking or electrical shock.**

⚠ WARNING

Connect the battery POSITIVE post to the capacitor POSITIVE terminal.

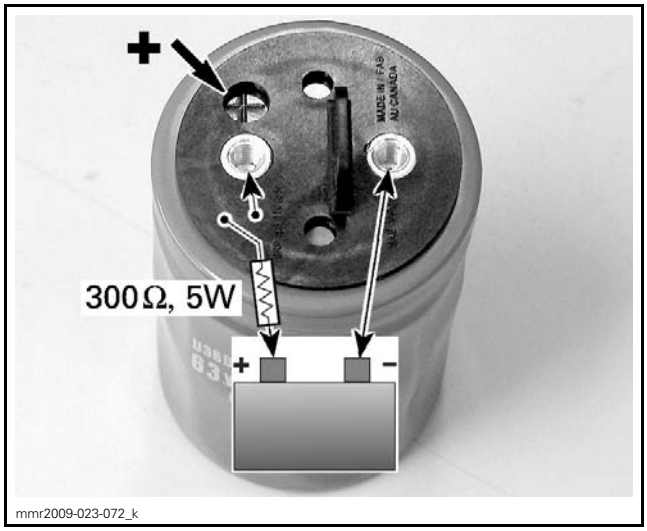

SWITCH AT OFF

Test Procedure

1. Turn switch to ON and read capacitor voltage. Wait until voltage reaches 12 V.

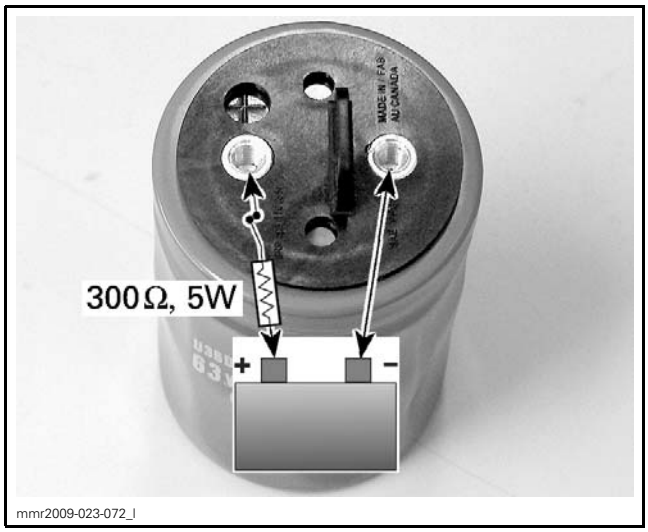

SWITCH AT ON

2. Turn test switch to **OFF**.
3. Use the FLUKE 115 MULTIMETER (P/N 529 035 868) set to Vdc.
4. Read capacitor voltage.

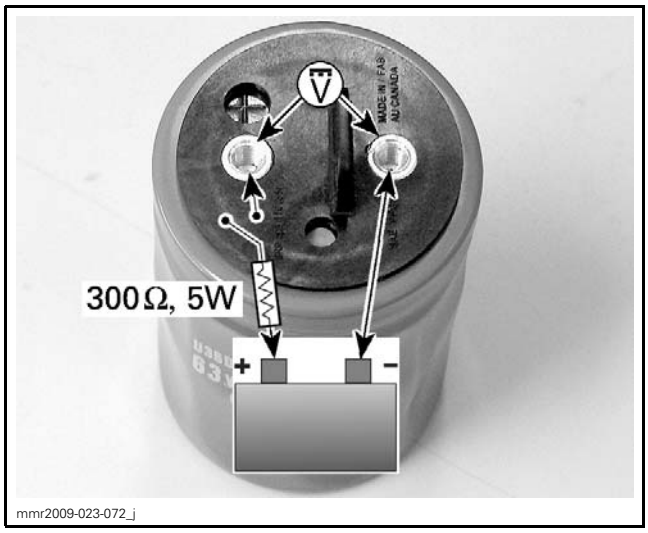

SWITCH AT OFF

5. Wait 5 minutes.
6. Read capacitor voltage again.

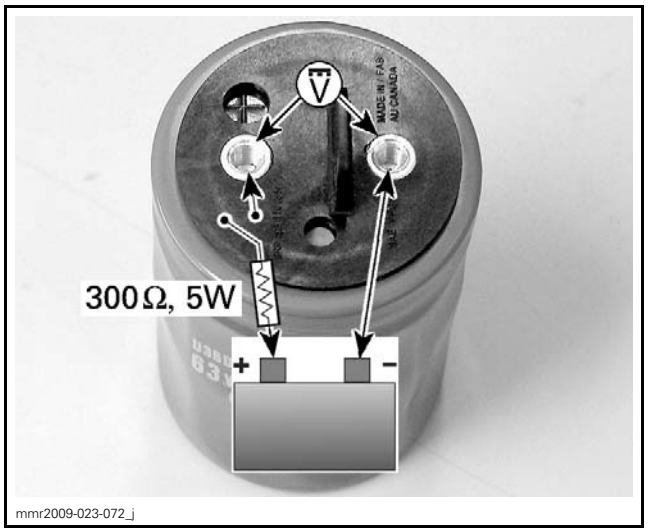

SWITCH AT OFF

7. The difference between the readings should not exceed the specification.

ALLOWED VOLTAGE DIFFERENCE BETWEEN READINGS
0.5 Vdc

If readings are out of specification, replace capacitor.

Reinstall capacitor. Refer to *INSTALLING CAPACITOR* in this subsection.

Testing Capacitor Residual Voltage

Procedure Setup

Follow the same steps as described in Procedure Setup of *TESTING CAPACITOR CHARGE HOLD*.

Test Procedure

1. Turn switch to **ON** and read capacitor voltage. Wait until voltage reaches 12 V to ensure the capacitor is fully charged.

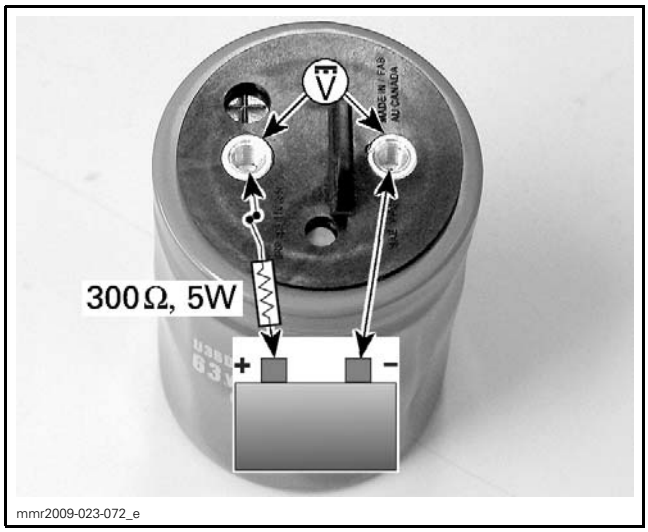

mmr2009-023-072_e

2. Turn test switch to **OFF**.

NOTE: Carry out the following steps **within one minute** to ensure the capacitor does not begin to discharge before the test.

3. Remove battery from circuit and connect the resistor and switch across capacitor terminals.

NOTICE **Ensure test switch is in the OFF position during the circuit configuration change.**

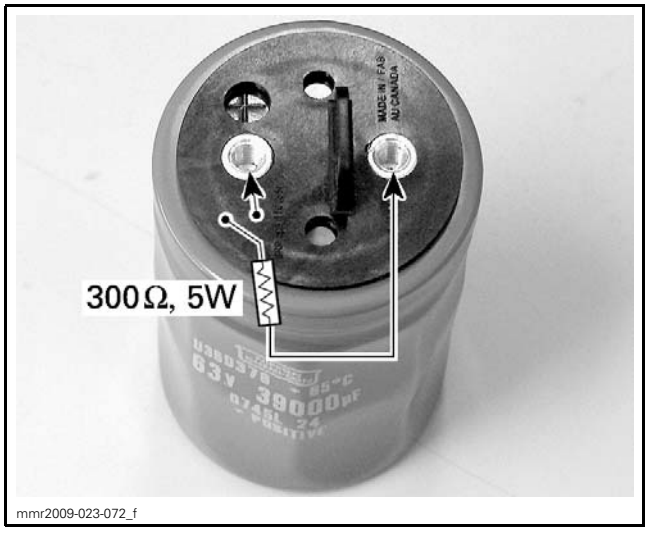

mmr2009-023-072_f

SWITCH AT OFF

4. Turn test switch to the **ON** position for 12 seconds ± 1 second to slowly discharge capacitor.
5. Read capacitor voltage.

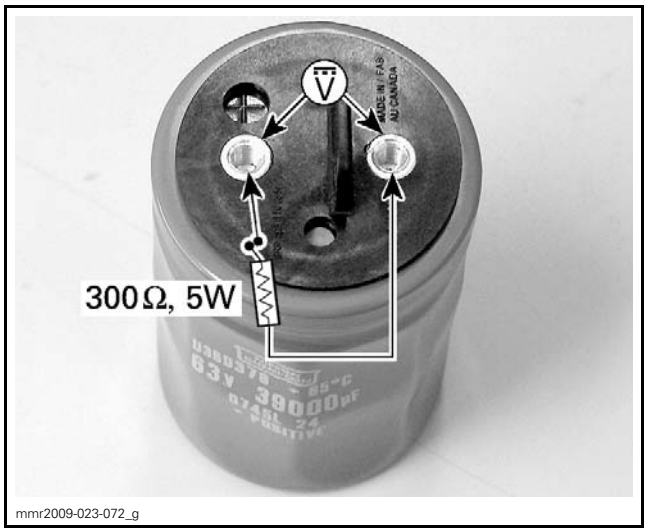

mmr2009-023-072_g

SWITCH AT ON

CAPACITOR RESIDUAL VOLTAGE
Must be above 2.6 Vdc

If voltage is out of specification, replace capacitor.

Removing Capacitor

1. Remove upper body module. Refer to *BODY* subsection.
2. Disconnect magneto connector.
3. Remove muffler.

⚠ WARNING

Disconnect the magneto connector. Should the engine be made to rotate with magneto connected, a spark may occur resulting in electrical shock, a fire or an explosion.

4. Ensure capacitor remains connected for at least 1 minute after engine shut down, or after engine was last cranked. This ensures capacitor is fully discharged.
5. Disconnect wire terminals from capacitor.

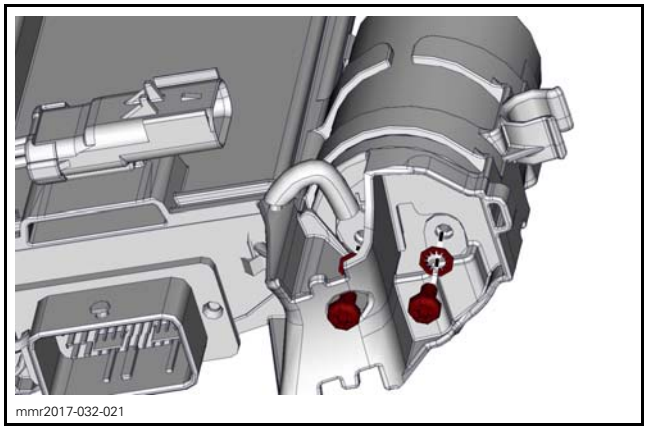
mmr2017-032-021

6. Remove capacitor from bracket.

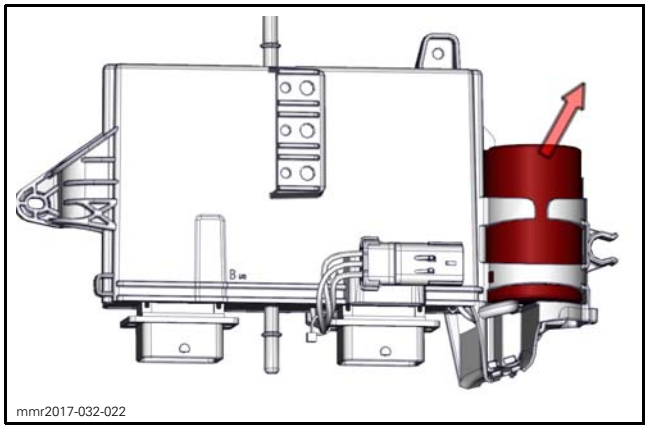
mmr2017-032-022

⚠ WARNING

Do not remove plastic protector from top of capacitor unless the capacitor is to be replaced. The cover prevents the two capacitor contacts from being easily shorted together which may cause a spark, possibly resulting in a fire.

7. Check inspection hole on top of capacitor.

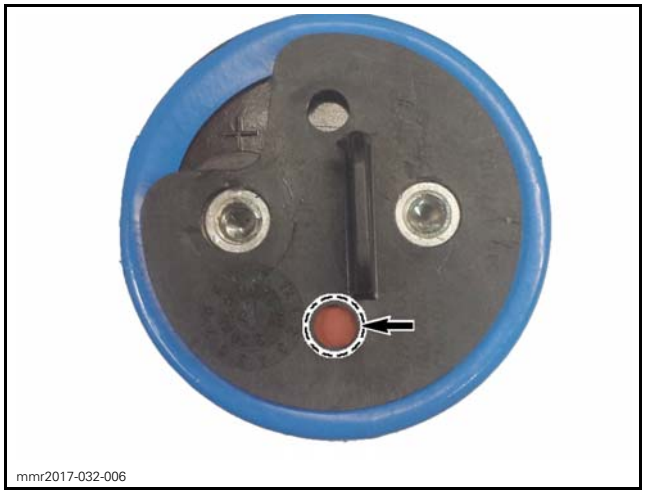
mmr2017-032-006

INSPECTION HOLE (SHIELD IS INTACT)

If the top shield is open (pierced), replace capacitor.

NOTE: The following illustration shows a perforated shield with capacitor fluid leakage. This capacitor was connected in reverse polarity.

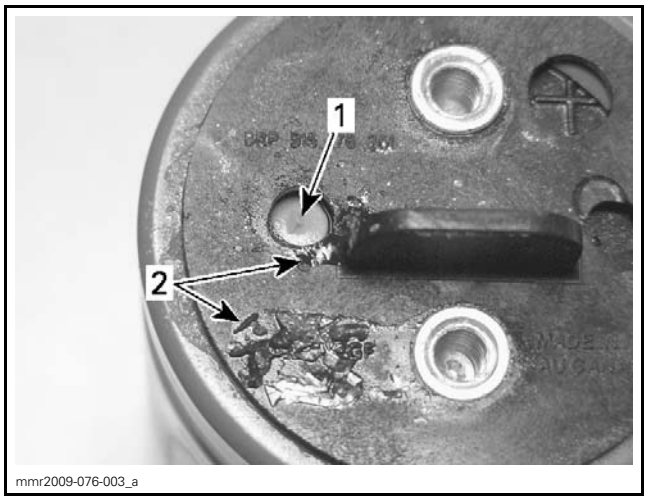

mmr2009-076-003_a

1. *Perforated shield*
2. *Capacitor fluid leakage*

Installing Capacitor

1. If capacitor was replaced, install a plastic protector cap on new capacitor.

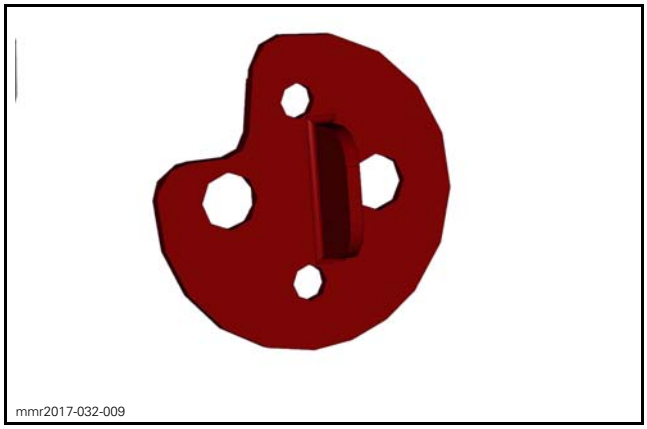
mmr2017-032-009

NOTE: When reinstalling plastic protector, ensure the **+** sign on top of capacitor is visible through the hole in protector.

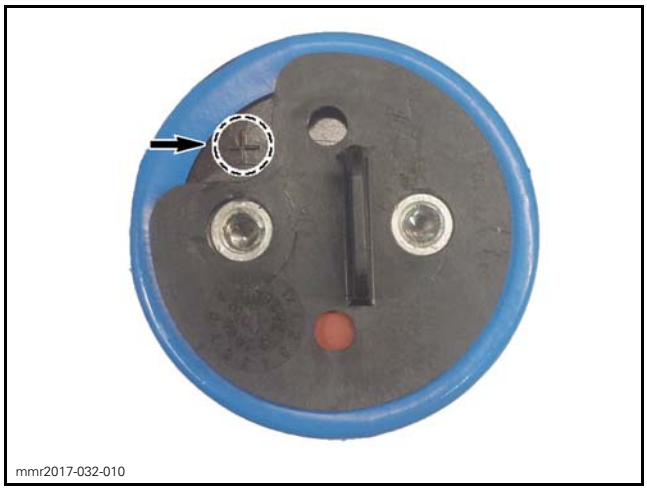
mmr2017-032-010

Otherwise, pull off protector, rotate it one half turn, then reinstall it.

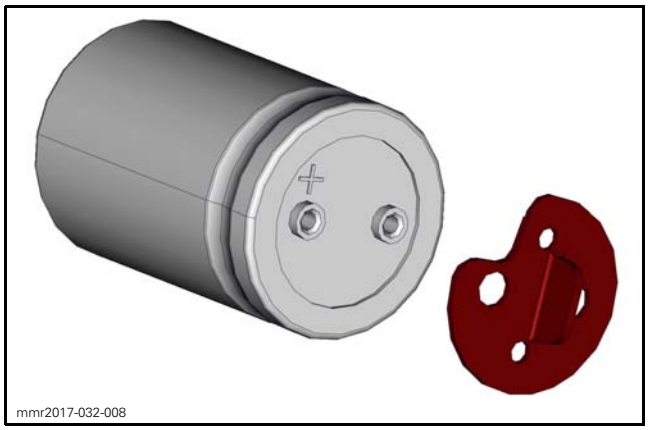

2. Route capacitor wires as per illustration and connect wire terminals to capacitor. Connect the WH/RD wire to the **+** terminal.

NOTICE **Improper polarity could destroy the capacitor while in operation.**

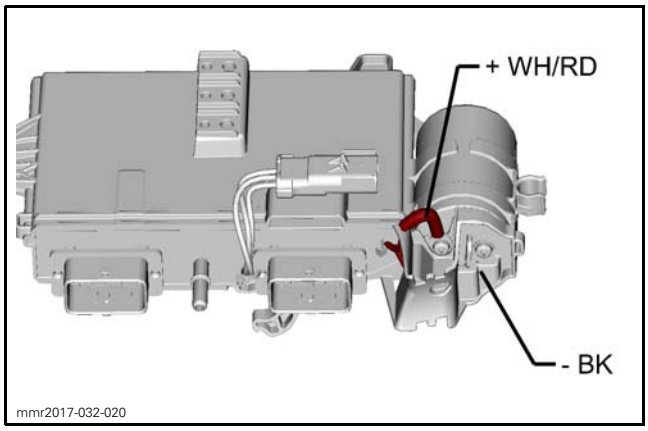

NOTICE **Be careful not to damage threads when tightening capacitor screws.**

3. Torque screws to 2 N•m (18 lbf•**in**).
4. Complete assembly of remaining parts in the reverse order of removal.

STARTING SYSTEM

SERVICE TOOLS

Description	Part Number	Page
ECM ADAPTER TOOL	529 036 166	153–154
FLUKE 115 MULTIMETER	529 035 868	153

SERVICE PRODUCTS

Description	Part Number	Page
DIELECTRIC GREASE	293 550 004	155

GENERAL

STARTING SYSTEM BASICS (WITHOUT BATTERY)

Conditions for Engine Starting

– Emergency engine stop switch set to RUN;
– D.E.S.S. key on the D.E.S.S. post.

Starting System Operation

Refer to *REWIND STARTER* subsection for starting system operation.

STARTING SYSTEM BASICS (WITH BATTERY)

Basic Starting System Operation (With Battery)

When the START button is pressed, 12 Vdc is applied to the ECM. The ECM activates the internal ECM relay which provides 12 volts to one end of the coil of the starter solenoid. If the engine cranking conditions are met, the ECM completes the starter solenoid control circuit by providing a ground.

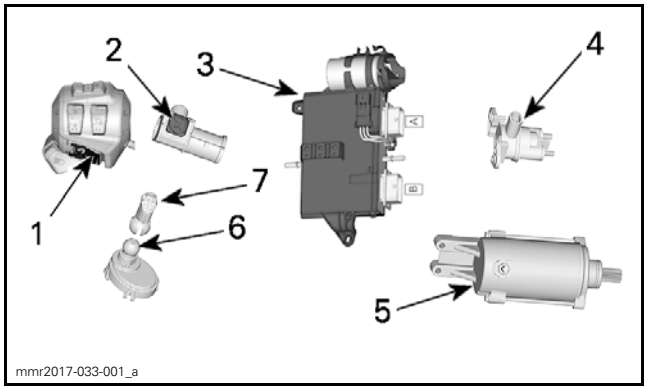

1. *Start/RER button*
2. *Emergency engine stop switch*
3. *ECM*
4. *Starter solenoid*
5. *Starter*
6. *D.E.S.S. post*
7. *D.E.S.S. key*

Engine Cranking Conditions

The following conditions must be met to allow engine cranking:

1. Emergency engine stop switch set to RUN.
2. D.E.S.S. key on the D.E.S.S. post.
3. START button pressed and held.

Starting System Logic

If the START button is activated while the throttle lever is depressed more than 60%, the engine will crank but will not start (engine drowned mode).

If the START button is held after engine has started, the ECM automatically stops the starter if engine speed reaches at least 1400 RPM.

TROUBLESHOOTING (WITH BATTERY)

DIAGNOSTIC TIPS

NOTE: It is a good practice to check for fault codes using B.U.D.S. as a first troubleshooting step. Refer to *DIAGNOSTIC SYSTEM AND FAULT CODES* subsection.

Starting system failures are not necessarily related to the starter but may be due to one the following:

– Crankshaft position sensor (CPS)
– Starter solenoid fuse and start fuse
– Battery, refer to *CHARGING SYSTEM*
– START/RER button
– Starter solenoid
– Emergency engine cut-off switch
– ECM
– Wiring/connections.

Check these components before removing the starter.

NOTE: This subsection assumes the problem is related to an electrical component of the starting system. If the starting system tests good, ensure engine is in good condition. Refer to applicable subsection.

DIAGNOSTIC GUIDELINES

NOTHING HAPPENS WHEN START/RER BUTTON PRESSED

1. Battery not connected
   - *Connect battery.*
2. Burnt fuse
   - *Check fuses*
3. Defective internal ECM relay or related circuits
   - *Test power and ground circuits to starter solenoid.*
4. Defective START/RER switch
   - *Test START/RER switch, wiring and connections.*

ENGINE DOES NOT CRANK

1. Discharged battery
   - *Recharge and test. Refer to CHARGING SYSTEM subsection.*
2. Battery connections
   - *Check/clean/tighten.*
3. Poor/bad or corroded ground contacts (engine, battery ground cable, starter etc.)
   - *Check/clean/repair, refer to POWER DISTRIBUTION AND GROUNDS subsection.*
4. Starter solenoid
   - *Test solenoid, wiring and connections.*
5. Damaged starter or ground cables
   - *Carry out SOLENOID DYNAMIC TEST.*
6. No ground provided by ECM to starter solenoid
   - *Refer to CONTINUITY TEST OF START/RER SWITCH CONTROL CIRCUIT in this subsection.*
7. Engine cannot be rotated (possibly seized)
   - *Refer to ENGINE subsection.*

ENGINE CRANKS SLOWLY

1. Loose, corroded or dirty battery cable connections
   - *Check/clean/tighten.*
2. Discharged/weak battery
   - *Recharge and test. Refer to CHARGING SYSTEM subsection.*
3. Low voltage from starter solenoid
   - *Carry out a SOLENOID DYNAMIC TEST.*
4. Damaged starter or ground cables
   - *Carry out SOLENOID DYNAMIC TEST.*

STARTER TURNS, BUT STARTER DRIVE DOES NOT MESH WITH RING GEAR

1. Worn starter drive gear/starter gear/ring gear
   - *Replace worn parts. Refer to MAGNETO AND STARTER subsection.*
2. Defective drive
   - *Replace starter drive. Refer to MAGNETO AND STARTER subsection.*

STARTER KEEPS RUNNING

1. Sticking solenoid contacts
   - *Replace solenoid.*
2. Sticking or defective starter drive
   - *Lubricate or replace. Refer to MAGNETO AND STARTER.*

PROCEDURES (WITH BATTERY)

REQUIRED TOOLS	
FLUKE 115 MULTIMETER (P/N 529 035 868)	
ECM ADAPTER TOOL (P/N 529 036 166)	

⚠ WARNING

Ensure vehicle cannot move when performing starting system tests.

START/RER SWITCH

Pressing the start/RER switch sends a start signal (battery voltage) to the ECM. If the *ENGINE CRANKING CONDITIONS* are met, the ECM will ground the starter solenoid.

In B.U.D.S., select the **Measurements** page and press the start/RER button to see if the ECM receives the start signal.

START/RER Switch Continuity Test

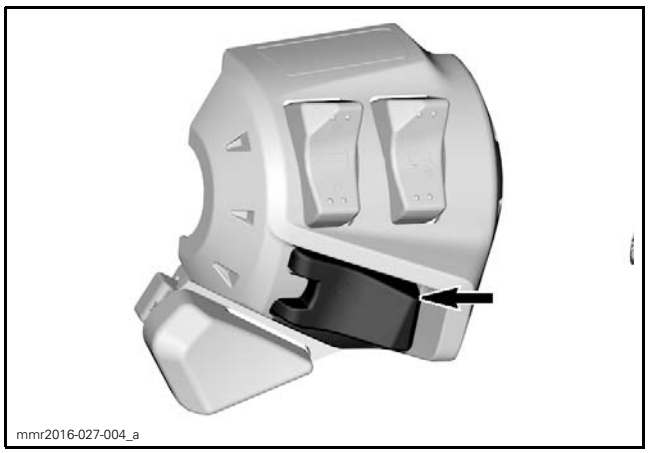
mmr2016-027-004_a

1. Disconnect the steering connector SH2. Refer to *WIRING HARNESS AND CONNECTORS* subsection.
2. Measure resistance through switch as per following table.

CONTINUITY TEST OF START/RER SWITCH CIRCUIT		
SWITCH POSITION	SH	RESISTANCE
Released	Pins 1 and 2	Close to 0 Ω
Pressed and held	Pins 2 and 8	Close to 0 Ω

If the switch does not test as specified, replace the START/RER switch.

If the switch tests as specified, check for an open circuit in harness.

STARTER SOLENOID

Starter Solenoid Location

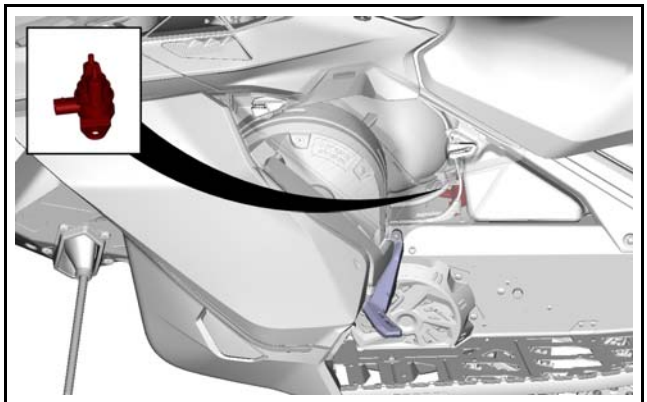
mmr2017-033-002

Testing Solenoid Input Voltage

1. Disconnect solenoid connector.

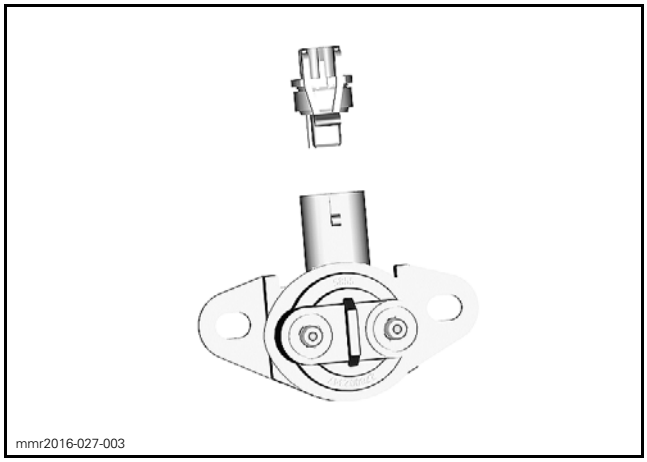
mmr2016-027-003

2. Set the multimeter to Vdc.
3. Install D.E.S.S. key on post.
4. Press the START/RER button to activate ECM.
5. Measure voltage.

SOLENOID INPUT VOLTAGE TEST (SOLENOID COIL)		
TEST PROBES		VOLTAGE READING
Pin A	Battery ground	Battery voltage

If test succeeded, carry out a *SOLENOID CONTROL CIRCUIT TEST*.

If test failed, carry out a *START/RER SWITCH CIRCUIT CONTINUITY TEST*.

Testing Solenoid Control Circuit

1. Set the multimeter to Ω.
2. Disconnect connector "B" from ECM, refer to *WIRING HARNESS AND CONNECTORS* subsection.
3. Install the ECM ADAPTER TOOL (P/N 529 036 166) on ECM harness connector.
4. Test continuity of wiring from solenoid to ECM as per following table.

SOLENOID CONTROL CIRCUIT TEST		
SOLENOID CONNECTOR	ECM CONNECTOR B	RESISTANCE
Pin B	ECMB-A1	Close to 0 Ω (continuity)

If test failed, repair or replace wiring/connectors.

If test succeeded, carry out a *SOLENOID COIL RESISTANCE TEST*.

Testing Solenoid Coil Resistance

1. Set multimeter to Ω.
2. Disconnect solenoid connector.
3. Measure solenoid coil resistance as per following table.

SOLENOID COIL RESISTANCE TEST		
SOLENOID CONNECTOR		RESISTANCE
Pin A	Pin B	4.5 to 5.5 Ω

If test fails, replace solenoid.

Testing Solenoid (Dynamic)

1. Depress the throttle lever to place the ECM in engine drowned mode. Hold throttle lever in place using a rubber band.
2. Set multimeter to Vdc.
3. Crank engine.
4. **As engine is cranking**, measure the voltage as per following tables.

SOLENOID DYNAMIC TEST (ENGINE CRANKING)		
TEST PROBES		SPECIFICATION
Solenoid battery post	Battery ground	Battery voltage

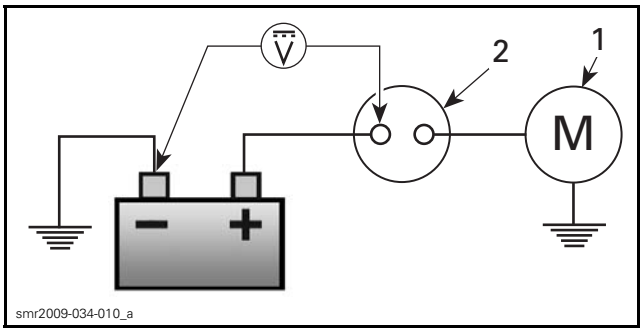

1. *Starter motor*
2. *Starter solenoid*

5. If test failed, check battery positive cable (from battery to solenoid).
6. If test succeeded, continue with next step.

SOLENOID DYNAMIC TEST (ENGINE CRANKING)		
TEST PROBES		SPECIFICATION
Solenoid starter post	Battery ground	Battery voltage

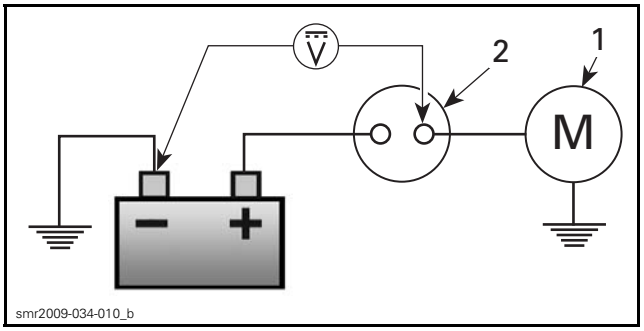

1. *Starter motor*
2. *Starter solenoid*

7. If test failed, test *SOLENOID INPUT VOLTAGE*.
8. If test succeeded, continue with next step.

SOLENOID DYNAMIC TEST (ENGINE CRANKING)		
TEST PROBES		SPECIFICATION
Solenoid battery post	Solenoid starter post	0.2 Vdc max.

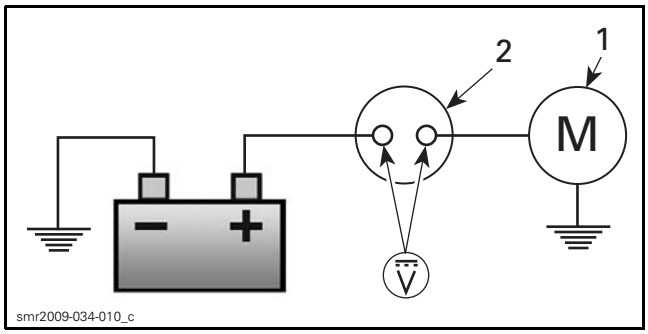

1. Starter motor
2. Starter solenoid

If test failed, replace solenoid.

If all solenoid dynamic tests are as specified, replace starter.

9. Remove rubber band from throttle lever.

10. Reinstall removed parts.

Removing Solenoid

1. Disconnect battery. Refer to *CHARGING SYSTEM* subsection.

⚠ WARNING

Always disconnect the BLACK (-) battery cable first and reconnect last.

2. Disconnect solenoid cables.

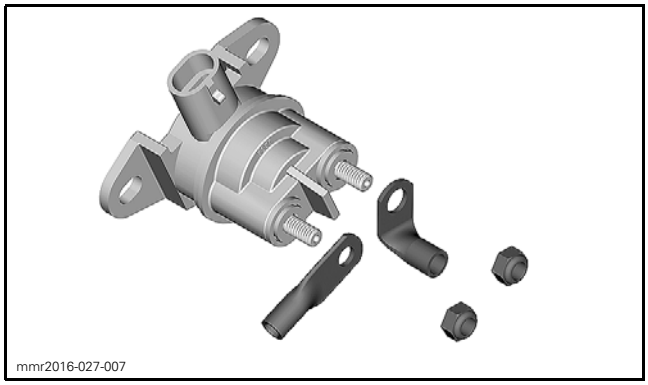

3. Disconnect starter solenoid connector.

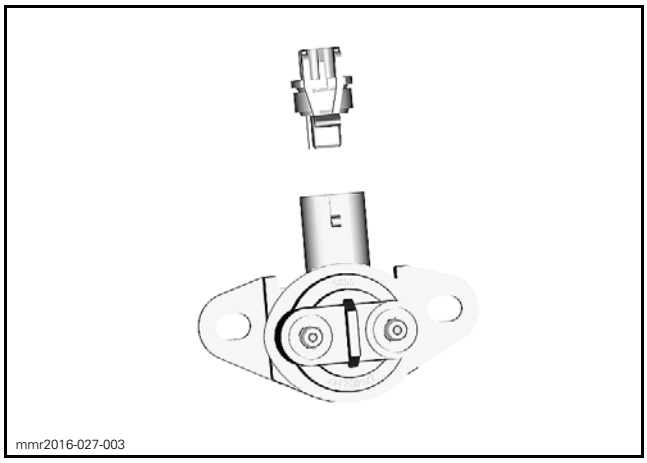

4. Press down on the tabs and release the solenoid.

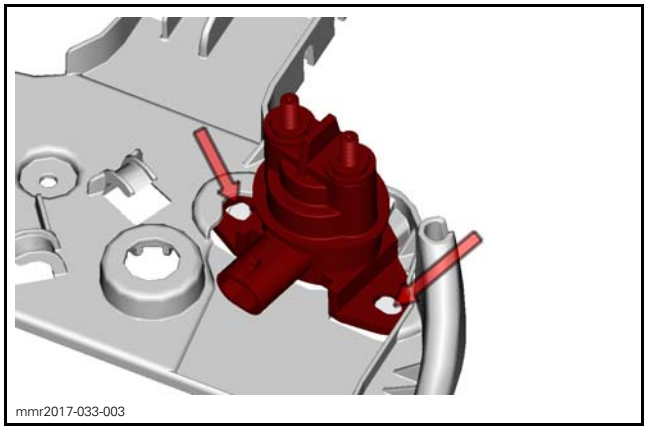

Installing Solenoid

Reverse the removal procedure and pay attention to the following.

1. Secure solenoid on its support, ensure the tabs lock.

NOTE: Apply DIELECTRIC GREASE (P/N 293 550 004) under and over each connections and make sure each nut are well covered.

TIGHTENING TORQUE	
Solenoid cable retaining nuts	4 N•m ± 0.5 N•m (35 lbf•**in** ± 4 lbf•**in**)

2. Close or slide protective caps.

3. Reconnect battery and test starter solenoid operation.

STARTER

For starter information refer to *MAGNETO AND STARTER* subsection.

RF DIGITALLY ENCODED SECURITY SYSTEM (RF D.E.S.S.)

SERVICE TOOLS

Description	Part Number	Page
POWER INTERFACE	515 177 223	158

GENERAL

SYSTEM DESCRIPTION

The following components are specially designed for this system: ECM, D.E.S.S. key (inside tether cord cap) and engine cut-off switch.

This system allows the engine to reach pulley engagement speed only if a D.E.S.S. key is installed on engine cut-off switch and the key is recognized as valid by the ECM.

The D.E.S.S. key contains a magnet and a RFID chip.

- The magnet closes the hall effect switch inside the engine cut-off switch.
- The RFID chip contains a unique digital code. It is the equivalent of the tooth-pattern cut on a conventional ignition key.

Up to 8 D.E.S.S. keys may be programmed in the ECM memory using the B.U.D.S. The keys can also be erased individually.

NOTE: If desired, a D.E.S.S. key can be used on another vehicle equipped with the D.E.S.S. system. It only needs to be programmed for that vehicle.

D.E.S.S. Beeper Codes

When starting the engine with a D.E.S.S. key on the engine cut-off switch, the key is identified by the ECM and D.E.S.S. signals will be issued according to the key recognition. See table.

D.E.S.S. SIGNAL		DESCRIPTION	COMMENT
BEEPER	DISPLAYED MESSAGE		
2 shorts beeps	Compact digital gauge: "Good Key" Other gauges: DESS tell-tale light will flash	Valid key read	Working D.E.S.S. key.
Short beeps repeating slowly	CHECK KEY	Unable to read key	– Reinstall key – RPM limited to 2500 – Check D.E.S.S. status in B.U.D.S. – No voltage at RFID connector pin D
Shorts beeps repeating rapidly	BAD KEY	Invalid key or key not programmed	– Use the proper key for this vehicle or have the key programmed. – Vehicle can not be driven.

PROCEDURES

D.E.S.S. KEY

D.E.S.S. Key Programming

Refer to the **B.U.D.S. directory** on *KNOWLEDGE CENTER* for all BUDS related information, including:

– Download link
– User manual (navigation through menus, programming keys, reading fault codes, writing data to modules etc.)
– Installation instructions
– BRP BUDS chart.

D.E.S.S. / ENGINE CUT-OFF OPERATION

Connect the BRP diagnostic software (BUDS2) to the vehicle. Refer to *COMMUNICATION TOOLS AND BUDS*.

Navigate to the **keys** page.

Read key. Consult the sections below to troubleshoot a key problem.

Normal Operation (Good Key)

Refer to *WIRING DIAGRAM*.

RFID CONNECTOR PIN	SPECIFICATIONS with POWER INTERFACE (P/N 515 177 223) installed
A	ECM ground
B	12 - 15 Vdc
C	5 Vdc
D	12 Vdc

Key Not Read

Possible causes:

– Damaged RFID chip
– No voltage at RFID-D connector
– No voltage at RFID-C connector

Condition can be duplicated with a magnet on the D.E.S.S. post.

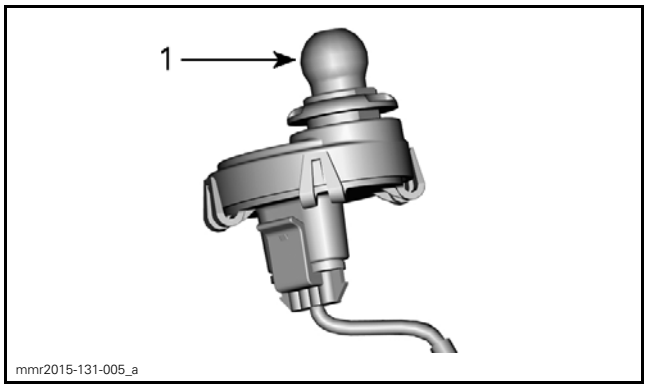

1. D.E.S.S. post

Key Not Present

Possible causes:

– No key installed
– No voltage at RFID-B connector
– No ground at RFID-A connector

Condition can be duplicated by unplugging the RFID connector.

Invalid Key

Possible causes:

– Key not programmed to ECM

BEEPER

The beeper is integrated in the multifunction gauge and cannot be replaced alone.

If the beeper does not sound when starting the engine, check the beeper operation. Refer to *GAUGE* subsection.

ROTAX ELECTRONIC REVERSE (RER)

SERVICE TOOLS

Description	Part Number	Page
12 V BATTERY SUPPLY CABLE	529 035 997	160
DIAGNOSTIC CABLE	710 000 851	160
ECM ADAPTER TOOL	529 036 166	160–161
FLUKE 115 MULTIMETER	529 035 868	160
MPI-2 INTERFACE CARD	529 036 018	160
MPI-3 INTERFACE CARD	529 036 353	160
POWER INTERFACE	515 177 223	160

SERVICE TOOLS – OTHER SUPPLIER

Description	Part Number	Page
OPTIONAL MALE-FEMALE EXTENSION SERIAL CABLE	(DB9)	160

GENERAL

The main components of the RER system are:

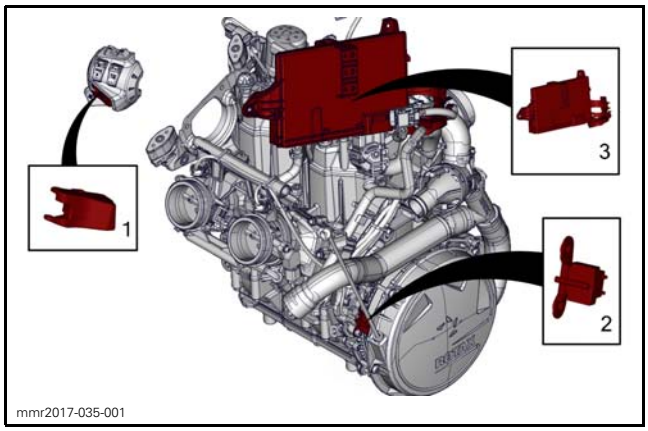

1. *RER Switch*
2. *Crankshaft position sensor (CPS)*
3. *ECM*

The ECM receives signals from the CPS for forward and reverse engine rotation.

The ECM recognizes a signal sent by the RER switch.

When the RER switch is activated and the engine is running at or near idle speed, the ECM cuts off ignition, therefore causing the engine RPM to drop off gradually.

When the engine reaches a predetermined low RPM (approximately 450 RPM), the ECM initiates an ignition spark that is greatly advanced in timing, creating a thrust which reverses engine rotation.

If the following condition are not meet, the RER function is disabled and nothing takes place when the RER button is pressed.

– RPM between 1000 and 4300 RPM
– Throttle lever released (TPS opening below 2%)
– Vehicle speed below 25 km/h (16 MPH).

NOTE: Refer to *E-TEC DIRECT FUEL INJECTION* subsection for crankshaft position sensor (CPS) testing.

TROUBLESHOOTING

DIAGNOSTIC TIPS

RER Does Not Respond When Depressing RER Button

Check the following:

– RER fuse condition
– Check if the vehicle is properly configured in B.U.D.S. (with Mechanical Reverse check box not selected)
– *TESTING RER SWITCH SIGNAL WITH B.U.D.S.*

Engine Stops after Pressing RER Button

This confirms that RER control circuits function normally. Check the following:

– CPS
– Engine compression, refer to *TOP END* subsection.
– Reed valves leaking, refer to applicable *TOP END* subsection

- RAVE valve adjustment or sticking, refer to *RAVE* subsection
- Drive belt adjustment, refer to *DRIVE SYSTEM AND BRAKE* subsection
- ECM
- Stator, refer to *MAGNETO SYSTEM* subsection
- Capacitor, refer to *CHARGING SYSTEM* subsection.

Ensure 55V system is in good condition at idle.

RER Functions Erratically

1. Check engine compression.

NOTE: A low compression resulting in loss of engine power may cause the RER to function erratically, leading you to believe the problem is in the electronic control system.

2. Low compression may be due to the following items:
   - REED valves leaking or broken
   - RAVE valves sticking
   - Worn engine parts.
3. Check piston condition through the intake and exhaust ports.

NOTE: Look for scoring on piston skirts. Scored piston skirts or other mechanical problems resulting in excessive friction which may cause the RER to function erratically.

4. Also check the following:
   - RER switch for intermittent operation, refer to *TESTING RER SWITCH CONTINUITY* in this subsection
   - Loose (intermittent) electrical connections
   - Drive belt adjustment, refer to *DRIVE SYSTEM AND BRAKE* subsection
   - ECM.

PROCEDURES

REQUIRED TOOLS	
FLUKE 115 MULTIMETER (P/N 529 035 868)	
ECM ADAPTER TOOL (P/N 529 036 166)	

RER SWITCH

Testing RER Switch Signal with BUDS2

1. Connect vehicle to BUSD2.Download from *KNOWLEDGE CENTER*. Refer to *COMMUNICATION TOOLS AND B.U.D.S.* subsection for proper connection instructions.

REQUIRED TOOLS	
MPI-2 INTERFACE CARD (P/N 529 036 018) or MPI-3 INTERFACE CARD (P/N 529 036 353)	
DIAGNOSTIC CABLE (P/N 710 000 851)	
POWER INTERFACE (P/N 515 177 223)	
12 V BATTERY SUPPLY CABLE (P/N 529 035 997)	
OPTIONAL MALE-FEMALE EXTENSION SERIAL CABLE (P/N (DB9))	

NOTE: A 12 volt battery is required to activate the electrical system.

2. In BUDS2, select the **Scan** button.
3. Select the **Measurements** tab.
4. Raise track and start the engine.
5. Press vehicle RER button and look for the **START/RER Button** status to change.

If the **START/RER Button** status changes, it indicates the RER switch, ECM and wiring are functioning properly. Test CPS. Refer to *E-TEC DIRECT FUEL INJECTION* subsection.

If the**START/RER Button** status does not change, carry out the RER switch tests that follow.

NOTE: When the B.U.D.S. RER test is carried out with engine running and reverse engages, the RER light on the **ECM Monitoring** page and the reverse light on the **Cluster Monitoring** page should both turn ON.

Testing RER Switch Continuity

1. Measure continuity of RER switch as per following table.

Models with multifunction switch on handlebar

2. Disconnect the RER switch (SH) connector.

SWITCH POSITION	SH CONNECTOR		RESISTANCE
Released	SH-1	SH-2	Continuity (0.4 Ω max.)
Press and held	SH-8	SH-2	Continuity (0.4 Ω max.)

Models with console switches

3. Disconnect the RER connector.

SWITCH POSITION	RER CONNECTOR		RESISTANCE
Release	RER-1	RER-2	O.L.
Press and hold	RER-1	RER-2	Continuity (0.4 Ω max.)

If continuity test fails, replace switch.

If continuity tests were good, measure voltage as per *TESTING RER SWITCH CIRCUIT*.

Testing RER Switch Circuit

Models with multifunction switch on handlebar

1. Backprobe SH2 connector pins as per table.
2. Lift track and idle vehicle.

(SH) CONNECTOR		SPECIFICATION
SH-1	Chassis ground	0Ω
SH-2	START / RER SIGNAL	Chassis ground when switch is released
		12 volts when switch is pressed and held
SH-8	Chassis ground	Unswitched 12 Vdc

If chassis ground SH-1 and 12 volts SH-8 measurements are good **but** START / RER SIGNAL SH-2 measurements are incorrect, replace switch.

If chassis ground is not measured, repair the wire between chassis ground and SH connector.

If 12 votls is not measured, repair the wire between RER fuse and SH connector.

Testing RER Switch Circuit

Models with console switches

1. Set multimeter to Vdc.
2. Backprobe RER connector pins as per table.
3. Lift track and idle vehicle.

(RER) CONNECTOR		SPECIFICATION
RER-2	Chassis ground	12 Vdc
RER-1	Chassis ground	No voltage when switch is released
		12 volts when switch is pressed and held

If no voltage is present at RER-1 when switch is pressed and held, replace switch.

If no voltage is present at RER-2, repair the wire between RER fuse and RER-2 connector.

Testing RER Switch Signal to ECM

Models with electric starter

1. If applicable, ensure the (SD) starter solenoid connector is disconnected.

All models

2. Disconnect ECMB connector and install the ECM ADAPTER TOOL (P/N 529 036 166).
3. Test wire continuity between the RER fuse and the ECMB connector as follows.

RER FUSE (F1)	ECMB CONNECTOR	RESISTANCE
FB-H	ECMB-A3	RER switch pressed and held Continuity (0.2 Ω max.)
FB-H	ECMB-A3	RER switch released Infinite (OL)

If continuity test is good, try a new ECM.

If test fails, repair or replace wiring.

BEEPER (REVERSE ALARM)

The reverse alarm (beeper) is integrated in the gauge cluster and is also used for emitting the vehicle beep codes. Refer to applicable *GAUGE* subsection for the testing procedure.

LIGHTS

SERVICE TOOLS

Description	Part Number	Page
12 V BATTERY SUPPLY CABLE	529 035 997	163
POWER INTERFACE	515 177 223	163

GENERAL

Refer to *WIRING HARNESS AND CONNECTORS* for electrical connector locations.

⚠ WARNING

Torque wrench tightening specifications must be strictly adhered to. Locking devices must be replaced with new ones when removed (e.g.: locking tabs, elastic stop nuts, self-locking fasteners, cotter pins, etc.).

SYSTEM TESTING

All vehicle lights are powered from the primary 12 Vdc circuit. This circuit is powered from and controlled by the ECM when the engine reaches 800 RPM. Refer to *POWER DISTRIBUTION AND GROUNDS* subsection for more information on how power is distributed to various systems.

For models without a battery, connect the following tools in order to provide electrical power to the vehicle.

REQUIRED TOOLS
– POWER INTERFACE (P/N 515 177 223)
– 12 V BATTERY SUPPLY CABLE (P/N 529 035 997)
– 12-volt battery

PROCEDURES

HEADLIGHTS

Removing Headlight Bulb

1. Remove gauge and trim. Refer to *BODY* subsection.
2. Remove front glove box. Refer to *BODY* subsection.
3. Unplug electrical connector.

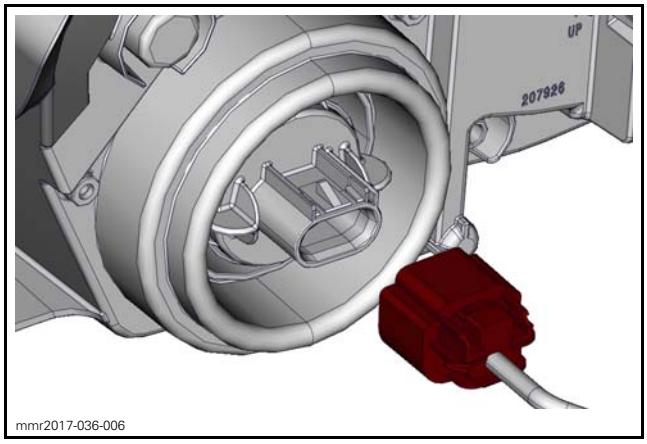

mmr2017-036-006

4. Turn bulb socket to unlock and remove bulb.

NOTE: Ensure bulb seal stays in place.

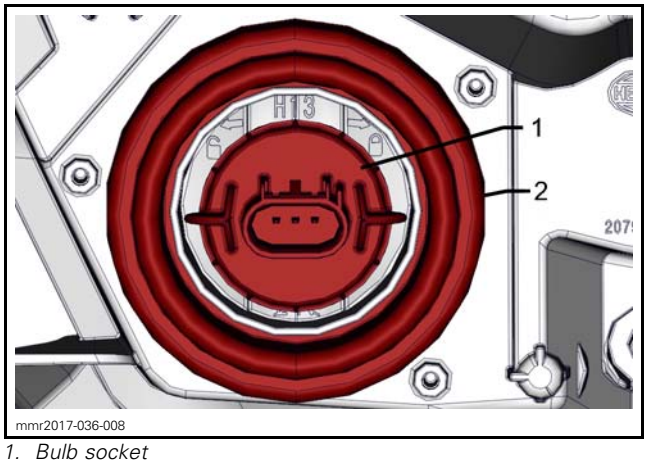

mmr2017-036-008

1. Bulb socket
2. Bulb seal

Installing Headlight Bulb

NOTICE **Never touch glass portion of a halogen bulb with bare fingers, it shortens its operating life. If glass is touched, clean it with isopropyl alcohol which will not leave a film on the bulb.**

Reverse removal procedure.

Measuring Headlight Input Voltage

1. Disconnect headlight connector(s).
2. Provide electrical power to the headlights for testing.

3. Read voltage at headlight connector as follows.

SWITCH POSITION	WIRE COLOR (HEADLIGHT CONNECTOR)		VOLTAGE
LO beam	GY/OG	BK	Battery voltage (Vdc)
HI beam	GY/WH	BK	

If voltage is inadequate, carry out the following to find the source of the problem:
– Test headlights dimmer switch.
– Test wiring harness and connectors.
– Test primary 12 Vdc system. Refer to *CHARGING SYSTEM*.

Testing Headlight Dimmer with BUDS2

The headlight dimmer switch status can be monitored using BUDS2.

Testing Headlight Dimmer Switch Continuity

1. Disconnect the applicable connector depending on gauge, refer to following tables.
2. Test switch circuits on applicable connector on switch side as per table.

MODELS WITH COMPACT DIGITAL GAUGE			
SWITCH POSITION	DIMMER PINS		SPECIFICATION
HIGH	2	4	Close to 0 Ω
	2	1	Infinite (OL)
LOW	2	4	Infinite (OL)
	2	1	Close to 0 Ω

MODELS WITH ANALOG/DIGITAL GAUGE			
SWITCH POSITION	SH PINS		SPECIFICATION
HIGH	12	7	Close to 0 Ω
	6	7	Infinite (OL)
LOW	12	7	Infinite (OL)
	6	7	Close to 0 Ω

If tests were good, switch is functioning properly.

If any test failed, check wiring and connections going to switch.

If test of wiring and connections was good, replace switch.

Aiming Headlight Beam

Beam aiming is correct when center of high beam is 25 mm (1 in) below the headlight horizontal center line, scribed on a test surface, 381 cm (12 ft 6 in) away.

1. Place the vehicle on a flat surface perpendicular to test surface (wall or screen) and 381 cm (12 ft 6 in) away from it.
2. Ask rider to sit on vehicle seat, or apply equivalent weight on the vehicle.
3. Select **high** beam.
4. Measure headlight center distance from ground. Scribe a line at this height on test surface (wall or screen). Light beam center should be 25 mm (1 in) below scribed line.

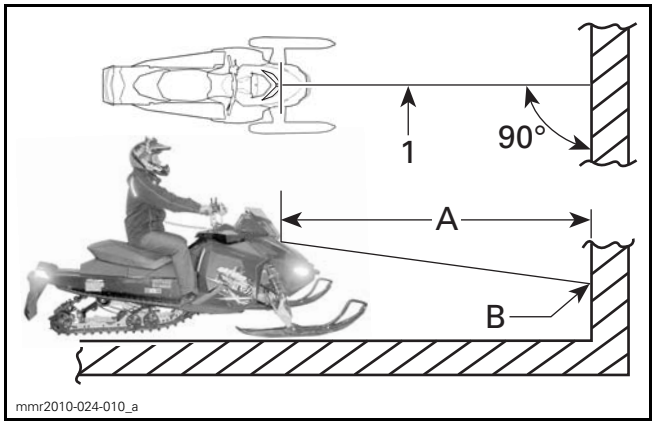

TYPICAL
1. Headlight center line
A. 381 cm (12 ft 6 in)
B. 25 mm (1 in) below center line

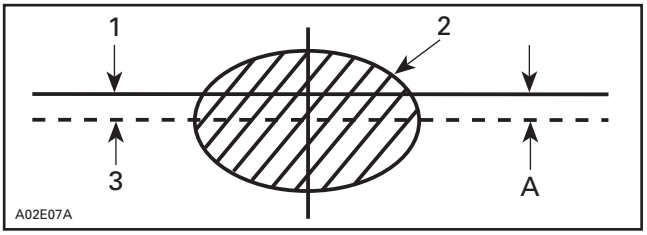

1. Headlight horizontal
2. Light beam (high beam) (projected on the wall)
3. Light beam center
A. 25 mm (1 in)

Adjusting Beam

Open the front storage compartment.

Turn knob to adjust the beam height.

NOTE: Avoid reaching extreme adjustments as the headlight assembly might move out of position.

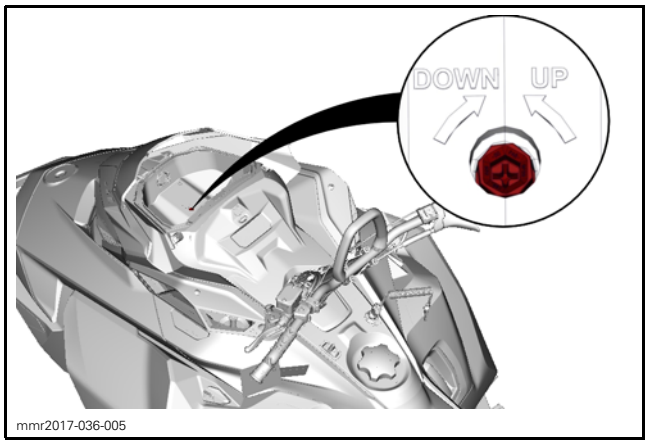

mmr2017-036-005

TAILLIGHT / BRAKE LIGHT

Replacing Taillight

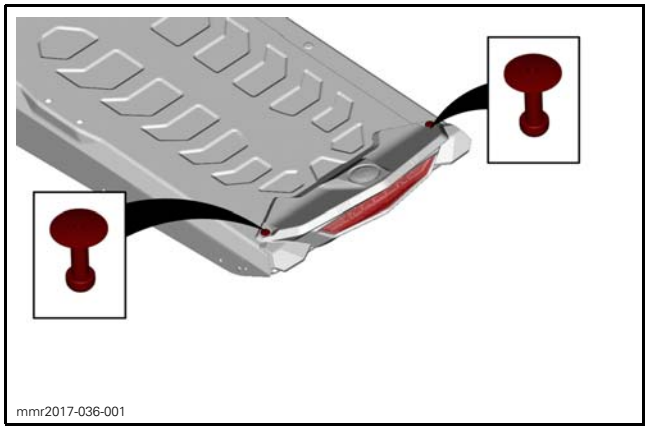
mmr2017-036-001

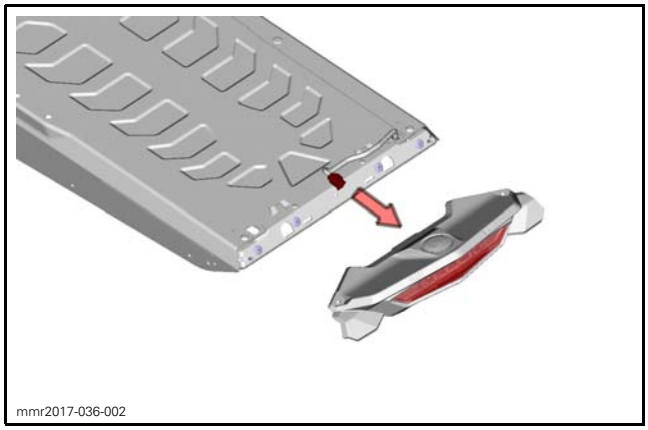
mmr2017-036-002

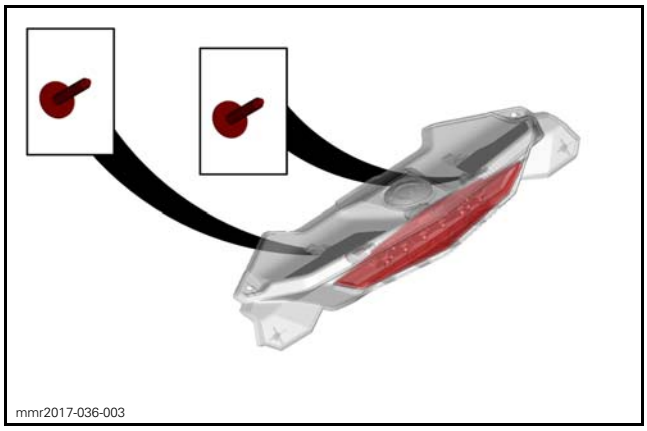
mmr2017-036-003

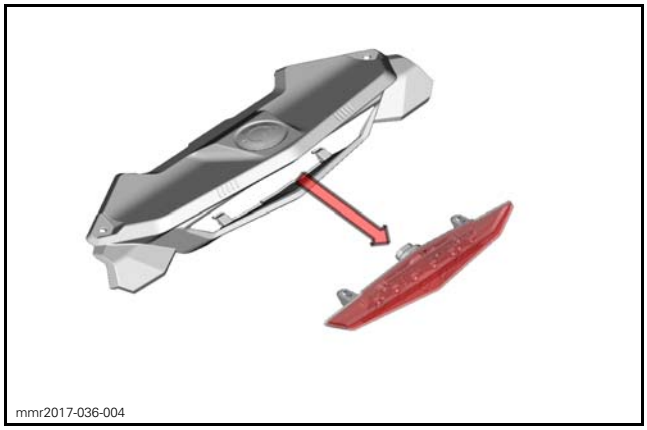
mmr2017-036-004

Replace taillight.

Installation is the reverse of removal. However pay attention to the following.

TIGHTENING TORQUE	
Taillight retaining screw	0.4 N•m (4 lbf•**in**)

GAUGE 4.5" DIGITAL DISPLAY

SERVICE TOOLS

Description	Part Number	Page
FLUKE 115 MULTIMETER	529 035 868	167

GENERAL

Most of the electrical tests require the following tool.

REQUIRED TOOL
FLUKE 115 MULTIMETER (P/N 529 035 868) 

Refer to *WIRING DIAGRAM INFORMATION* subsection for diagnostic tips on troubleshooting electrical problems.

NOTICE **It is recommended to always disconnect the battery when replacing any electrical component. Always disconnect battery as specified, BLACK (-) cable first.**

INDICATOR LAMPS DESCRIPTION

Important information about vehicle condition is displayed on the multifunction gauge. When starting the engine, always look at the gauge for any indicator lamps or special messages.

Important information messages can also be displayed temporarily in the lower display to assist indicator lamps.

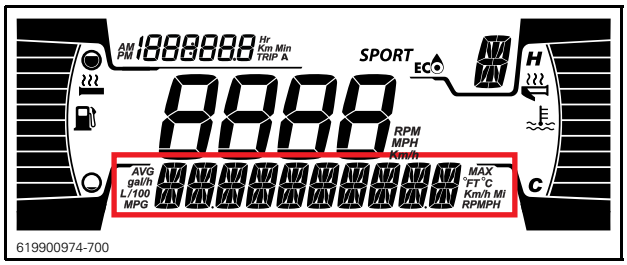

LOWER DISPLAY

NOTE: Depending on the vehicle, not all the indicator lamps and messages will be applicable.

INDICATOR LAMPS (MALFUNCTIONS)			
INDICATOR LAMP(S)	DIGITAL WARNING	CAUSE	WHAT TO DO
None	BAD KEY	Wrong or defective key	- Use the right key for the vehicle. - Program a new key if the previous key is defective. - Check wiring and connectors. Refer to the *WIRING DIAGRAM*.
None	BELT OVERLOAD	Belt reached its limit	- Stop vehicle. - Inspect drive belt. Replace as required.
ON	HIGH ENGINE TEMPERATURE	Engine is overheating	- Stop and wait for engine to cool off. - Check for leaks. - Check and adjust the coolant level.

INDICATOR LAMPS (MALFUNCTIONS)			
INDICATOR LAMP(S)	DIGITAL WARNING	CAUSE	WHAT TO DO
ON	LO BATT VOLT or HI BATT VOLT	Low or high battery voltage	- Recharge battery. - Check battery connections. - Check the charging system.
ON	BRAKE	Throttle lever is applied when park brake is on	- Disengage park brake.
ON	CHECK ENGINE	Engine management component malfunction	- Stop the engine. The cluster must be completely shuts down.
FLASHING	LIMP HOME MODE	Important engine management component	- Connect the vehicle to the BRP diagnostic software (BUDS2). Check faults codes and perform recommended actions.
ON	STOP ENGINE (ACE engines)	Low oil pressure	- Check for oil leaks. - Check and adjust the engine .
	LOW OIL (E-TEC engines)	Low oil tank level	
ON	Variable messages - The message changes in accordance with the defective component.		

TROUBLESHOOTING

DIAGNOSTIC TIPS

IMPORTANT: When solving an electrical problem, the first thing to do is to check the battery condition as well as its cables and connections.

Make sure the battery is fully charged or install a power pack for any tests that involves a prolonged "key ON" period. If battery voltage gets too low, not only test results can be altered, but the vehicle electrical system may not operate normally.

Pay attention to ground wires. They could become loose or corroded which causes them to act as an additional load in a circuit, dropping voltage and reducing current to components. Some components may be grounded through their outer casing and mounted hardware. This should also be considered.

Electrical Connectors

Pay particular attention to ensure that pins are not out of their connectors, loose, or damaged. The troubleshooting procedures may not cover problems resulting from one of these causes.

NOTICE Ensure all terminals are properly crimped on wires and connector housings are properly fastened. When replacing any electric or electronic part(s), always check electrical connections. Make sure that they are clean, corrosion-free, tight and make good contact. The voltage and current might be too weak to go through dirty or corroded connector pins or terminals.

MULTIFUNCTION GAUGE TROUBLESHOOTING

GAUGE FUNCTIONS INOPERATIVE OR WORKING INTERMITTENTLY

1. Power supply or ground problem
   - Check power supply and ground circuits.

PROCEDURES

MULTIFUNCTION GAUGE

Testing the Multifunction Gauge

Before beginning any troubleshooting, test or repair, always check for fault codes.

1. Check for fault codes using BUDS2.
2. Record all fault codes, then erase them.
3. Perform a complete shutdown of the electrical system and reactivate it.
4. Check fault codes. If a previous fault codes reappears, perform the required service actions.

Testing the Multifunction Gauge Using BRP Diagnostic Software (BUDS2)

Connect the vehicle to the BRP diagnostic software (BUDS2).

In BUDS2, go to:

– **Functions** page
– **Cluster** button
– **Routines - Execute Cluster WOW test**.

All indications will come and stay ON so that you can verify each indication.

NOTE: The **WOW Test** only tests the gauge **LEDs** and **LCD**. It does not test the actual circuit functions related to each indication.

Testing the Multifunction Gauge Power Input

If the multifunction gauge is inoperative, first check for fault codes with BRP Diagnostic Software, record all faults then erase them. Reactivate the electrical system and recheck for faults. If any fault code appears, perform service actions required. Refer to *COMMUNICATION TOOLS* subsection.

1. Remove multifunction gauge.
2. Perform the test at multifunction gauge connector as per following illustration and tables.

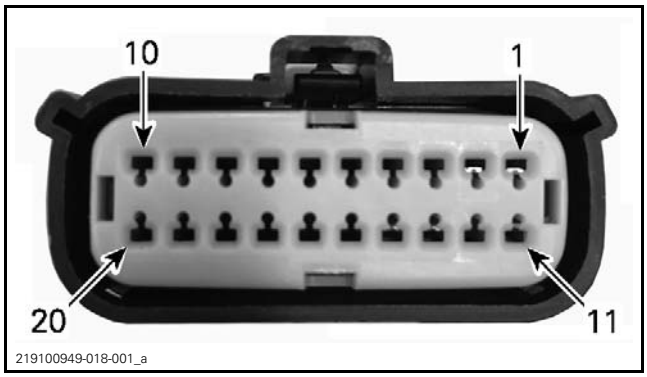

MULTIFUNCTION GAUGE CONNECTOR (PIN-OUT)

MULTIFUNCTION GAUGE POWER TEST			
CL_A CONNECTOR	BATTERY	IGNITION POSITION	RESULTS
Multifunction connector pin 1	Negative (-) post	Any	Close to battery voltage
Multifunction connector pin 11		ON	Close to battery voltage

If there is no power at pin 1, check fuse F4 and the related circuit.

If there is no power at pin 11, in check fuse F2 and the related circuit.

If the power test is within specification, continue with *TESTING THE MULTIFUNCTION GAUGE GROUND CIRCUIT*.

Testing the Multifunction Gauge Ground Circuit

Test as per the following table.

MULTIFUNCTION GAUGE GROUND TEST		
CL CONNECTOR	BATTERY	RESULT
Pin 2	Negative (-) post	Close to 1 Ω

If the ground at pin 2 is not within specification, check the related circuit.

If the ground tested to specification, continue with *TESTING THE MULTIFUNCTION GAUGE CAN WIRE CIRCUIT*.

Testing the Multifunction Gauge CAN Circuit

1. Remove the front service cover for access to the DLC (Diagnostic Link Connector). Refer to *BODY* subsection.
2. Test as per the following table.

MULTIFUNCTION GAUGE CAN WIRE TEST		
CL CONNECTOR	DLC	RESULTS
Pin 13 (CAN HI)	Pin 1	Close to 0.4 Ω
Pin 14 (CAN LO)	Pin 2	Close to 0.4 Ω

If the CAN wire verification test fails, check the related circuit.

If the multifunction gauge functions, however there is a suspected communication problem with another component, perform this test between the multifunction gauge and that component.

If the multifunction gauge power, ground and CAN verification tests are all to specifications and the multifunction gauge is inoperative, replace the multifunction gauge.

Removing the Multifunction Gauge

Remove gauge support. Refer to procedure in *BODY* subsection

Disconnect the gauge connector. Remove following fasteners.

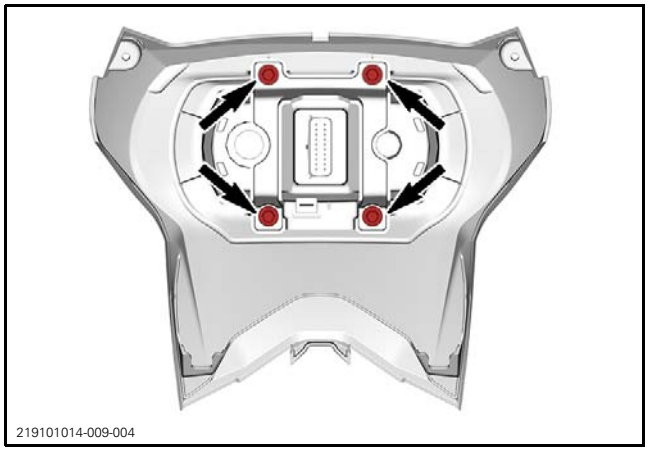
219101014-009-004

Installing the Multifunction Gauge

The installation is the reverse of the removal procedure. However, pay attention to the following.

TIGHTENING TORQUE	
Multifunction gauge retaining screws	1 N•m ± 0.2 N•m (9 lbf•**in** ± 2 lbf•**in**)

If the multifunction gauge was replaced, connect the vehicle to the BRP diagnostic software (BUDS2) and apply any available updates.

When updates are completed, perform the following:

– Transfer the vehicle mileage as described in *VEHICLE MILEAGE TRANSFER*.
– Change settings as per customer preferences (language and units) as described in *SETTING LANGUAGE AND UNITS OF MEASUREMENT*

Vehicle Mileage Transfer

1. In BUDS2, go to:
   – SETTINGS page
   – CLUSTER button
   – SETTINGS tab.
2. Select Increase Odometer Mileage.
3. Click on the upper right arrow in the green circle.
4. Read carefully the on-screen instructions before clicking in the value box.
5. Enter the new mileage if it is different from the indicated one.
6. Press SET button.
7. Press the WRITE TOTAL button.
8. Select OK to confirm the mileage.
9. Close the window.

Setting Language and Units of Measurement

1. Connect the vehicle to the BRP diagnostic software (BUDS2), refer to the *COMMUNICATION TOOLS* subsection.
2. In BUDS2, go to:
   – SETTINGS page
   – CLUSTER button
   – SETTINGS tab
   – CONFIGURE LANGUAGE AND UNITS.

ACCESSORIES

SERVICE TOOLS

Description	Part Number	Page
12 V BATTERY SUPPLY CABLE	529 035 997	171
FLUKE 115 MULTIMETER	529 035 868	176
POWER INTERFACE	515 177 223	171

GENERAL

On multifunction analog/digital gauge, heated grips and heated throttle lever are limited at 50% output when idling.

NOTE: It is a good practice to check for fault codes using BUDS2 software as a first troubleshooting step. Refer to *DIAGNOSTIC AND FAULT CODES* subsection.

⚠ WARNING

Torque wrench tightening specifications must be strictly adhered to. Locking devices must be replaced with new ones when removed (e.g.: locking tabs, elastic stop nuts, self-locking fasteners, cotter pins, etc.).

SYSTEM TESTING

For models without a battery, connect the following tools in order to provide electrical power to the vehicle.

REQUIRED TOOLS
– POWER INTERFACE (P/N 515 177 223)
– 12 V BATTERY SUPPLY CABLE (P/N 529 035 997)
– 12-volt battery

SYSTEM DESCRIPTION (HEATED THROTTLE LEVER)

Power to the heated throttle lever is controlled through the gauge.

A three position switch allows the selection various heat levels, which are displayed in the gauge.

NOTE: The heated handlebar grips and the heated throttle lever are controlled by the same 3 position switch when used with the console switch. Refer to *SETTING THE HEATED THROTTLE LEVER RATIO*.

NOTE: The heating intensity is displayed via the gauge with the activation of the heated throttle lever switch.

The switch selection sends a signal to the gauge to increase or decrease heat.

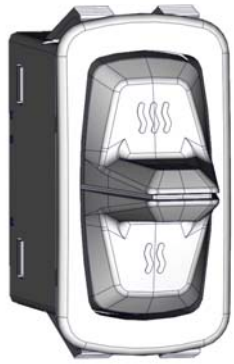

mmr2017-038-001

HEATER SWITCH - MODELS WITH CONSOLE SWITCH

mmr2017-038-002

HEATER SWITCH - MODELS WITH MULTIFUNCTION SWITCH

The gauge then applies the appropriate amount of current to the heater according to the selection.

To turn OFF the heaters, select heat down until there is no more indication on the bar graph.

When released, the 3 position switch springs back to the center neutral position.

SYSTEM DESCRIPTION (HEATED HANDLEBAR GRIPS)

The grip heat is controlled through the gauge.

A three position switch allows the selection of various heat levels, which are displayed in the gauge.

NOTE: The heated handlebar grips and the heated throttle lever are controlled by the same 3 position switch when used with the console switch. Refer to *SETTING THE HEATED THROTTLE LEVER RATIO*.

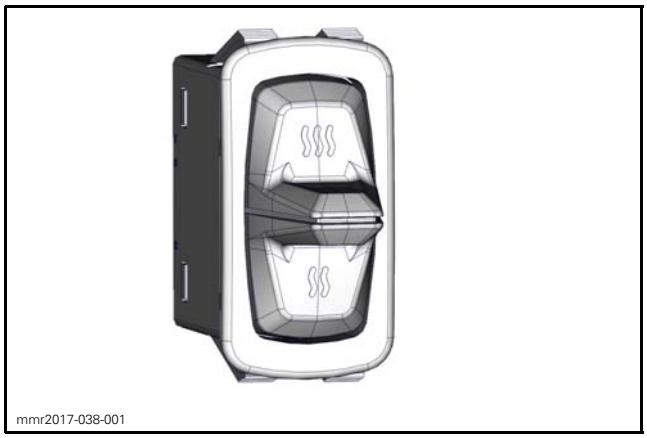

HEATER SWITCH - MODELS WITH CONSOLE SWITCHES

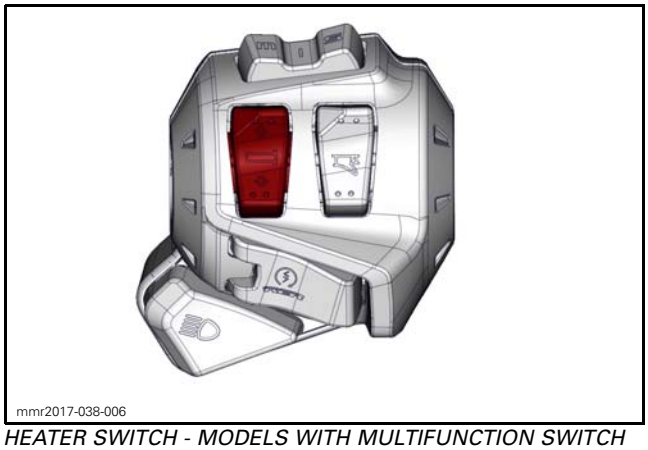

HEATER SWITCH - MODELS WITH MULTIFUNCTION SWITCH

NOTE: The heating intensity is displayed via the gauge with the activation of the heated grips switch.

The gauge then applies the appropriate amount of current to the heater according to the selection.

To turn OFF the heaters, select heat down until there is no more indication on the bar graph.

When released, the switch springs back to the center neutral position.

SETTING THE HEATED THROTTLE LEVER RATIO

On models where one switch simultaneously controls the heated grip temperature and the throttle lever, use BUDS2 to set the heated throttle grip ratio.

A higher ratio will increase the heated throttle temperature compared to the heated grips.

A lower ratio will lower the heated throttle temperature compared to the heated grips.

1. Connect BUDS2. Refer to *COMMUNICATION TOOLS AND BUDS* subsection.
2. Navigate to the settings page.
3. Change the **Heated Throttle Lever Ratio**.
4. Write the changes to the cluster.

PROCEDURES

HEATED THROTTLE LEVER

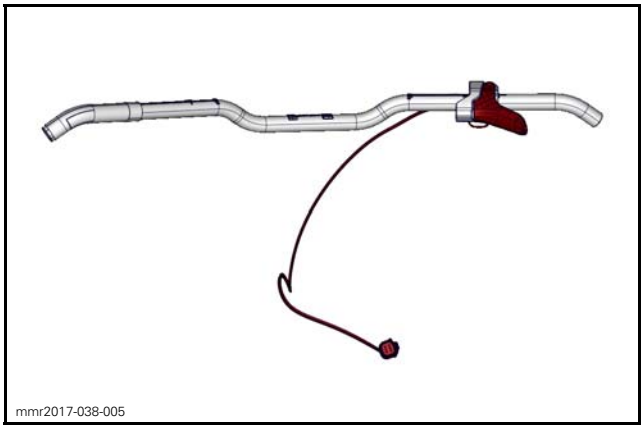

On multifunction analog/digital gauge heaters are limited to 50% under 2000 RPM.

For troubleshooting:

– Start engine and rev above 800 RPM for at least 2 seconds
– Use BUDS2 to activate the applicable heater.

NOTE: On models with console switches, there is only one switch that controls both the heated grips and heated throttle lever. Refer to *SYSTEM DESCRIPTION* and *SETTING THE HEATED THROTTLE LEVER RATIO*.

Testing Heated Throttle Lever Switch with BUDS2

Heating elements are permanently connected to ground. Positive voltages are supplied by gauges.

1. Provide electrical power to the gauge for testing.
2. Using BUDS2, select the **Measurements** page.
3. Alternately increase or decrease heat using heated throttle lever switch.
4. Look for the applicable value to change to confirm the gauge receives the signal.

If test is good, refer to *TESTING GAUGE HEATED THROTTLE LEVER POWER OUTPUT* in this subsection.

If test failed, refer to *TESTING THROTTLE LEVER HEAT SWITCH* in this subsection.

Testing Gauge Heated Throttle Lever Power Output

1. Provide electrical power to the gauge for testing.
2. Using BUDS2, select the **Functions** page..
3. In BUDS2, turn on the heated throttle grip.
4. Touch throttle lever to confirm it heats up.
5. Backprobe gauge **no. MG** connector as per following table.

MODELS WITH COMPACT DIGITAL GAUGE	
TERMINAL	SPECIFICATION
MG-7	2.7 to 14.5 Vdc depending on heated throttle lever ratio

MODELS WITH ANALOG/DIGITAL GAUGE	
TERMINAL	SPECIFICATION
MG-4	12 Vdc

6. If test is good, the gauge output to throttle lever heater is good. Proceed with *TESTING THROTTLE LEVER HEATING ELEMENT* in this subsection.
7. If the test failed, replace the gauge.

Testing Throttle Lever Heating Element

Refer to *WIRING HARNESS AND CONNECTORS* subsection for connector location.

STR 6P CONNECTOR		RESISTANCE @ 20°C (68°F)
STR 6P-5	STR 6P-2	1.73 - 4.22 Ω

1. If readings are out of specifications, replace throttle lever.
2. If heating element readings are within specifications, check wiring and connections to gauge.
3. Reconnect connectors.

HEATED HANDLEBAR GRIPS

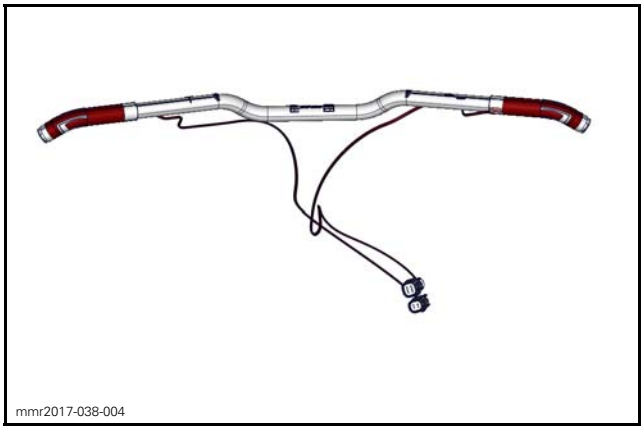
mmr2017-038-004

Testing Handlebar Heated Grip Switch with BUDS2

Heating elements are permanently connected to ground. Positive voltages are supplied by gauges.

1. Provide electrical power to the gauge for testing.
2. Using the BUDS2, navigate to the **Measurements** page.
3. Press on the vehicle handle grip heat switch to alternately increase or decrease heat.
4. In BUDS2, look for the applicable to change.

If test is good, proceed with *TESTING GAUGE HEATER GRIPS POWER OUTPUT WITH BUDS2* in this subsection.

If test failed, proceed with *TESTING HANDLEBAR GRIP HEAT SWITCH* in this subsection.

Testing Gauge Heater Grips Power Output with BUDS2

1. Provide electrical power to the gauge for testing.
2. Using the BUDS2, navigate to the **Functions** page.
3. In BUDS2, turn the heated grips on.

MODELS WITH COMPACT DIGITAL GAUGE	
TERMINAL	SPECIFICATION
MG-1	12 Vdc

MODELS WITH ANALOG/DIGITAL GAUGE	
TERMINAL	SPECIFICATION
MG-5	12 Vdc

4. If test is good, the gauge heater to handlebar grip heater is good. Proceed with *TESTING HANDLEBAR GRIP HEATING ELEMENT* in this subsection.
5. If the test failed, replace the gauge.

Testing Handlebar Grip Heating Element

If you cannot feel the temperature increase of a hand grip heating element, carry out the following steps.

1. Disconnect heated grip connector.
2. Test heating elements on either side as per following specifications.

Refer to *WIRING HARNESS AND CONNECTORS* subsection for connector location.

RIGHT HEATED GRIP		RESISTANCE @ 20°C (68°F)
STR 6P-4	STR 6P-1	5.3 - 6.6 Ω

LEFT HEATED GRIP		RESISTANCE @ 20°C (68°F)
STR 6P-3	STR 6P-1	5.3 - 6.6 Ω

3. If readings are out of specifications, replace applicable handle grip heating element.
4. If heating element readings are within specifications, check wiring and connections.
5. Reconnect connectors.

Removing Heater Element

NOTICE **Heater wire routing may vary significantly due to different type handlebars and vehicles. Its highly important to take note of exact positioning of grip heaters, locking ties, and wire routing before removing them from the handlebars. Failure to properly route wires may lead to equipment damage or failure.**

1. Disconnect the connector, Refer to *WIRING DIAGRAM AND CONNECTORS* subsection for connector location.
   1.1 STR 4P for left hand handlebar heater
   1.2 STR 6P for right hand handlebar heater

Use procedures for *MOLEX* connectors in the *WIRING DIAGRAM AND CONNECTORS* subsection.

2. Cut locking ties securing heater wires to handlebars.
3. Pull wires from harness protective sheath, multifunction switch housing or throttle lever housing.
4. Cut and remove black electrical tape from heater element and remove heater from cork insulator.
5. If damaged, remove cork insulator from handlebar and clean all adhesive residue from the handlebar.

Installing Heated Grips Heater Element

1. Measure 159 mm (6.25 in) from the end of the handlebar, and across the top of the bend in the bar. Trace a reference line with a marker at that point on the handlebar.

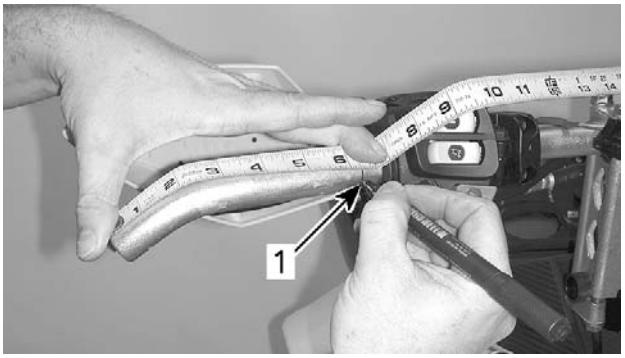

TYPICAL — MEASURING FOR HEATER POSITION
1. Trace reference line

2. Align the edge of the cork insulator with the reference line centered with the handlebar folding axis as illustrated.

TYPICAL — CORK INSULATOR ALIGNMENT

3. Apply firm pressure to cork insulator to assure proper adherence to handlebar.
4. Align the film heater element with the cork insulator and center of handlebar folding axis as illustrated.

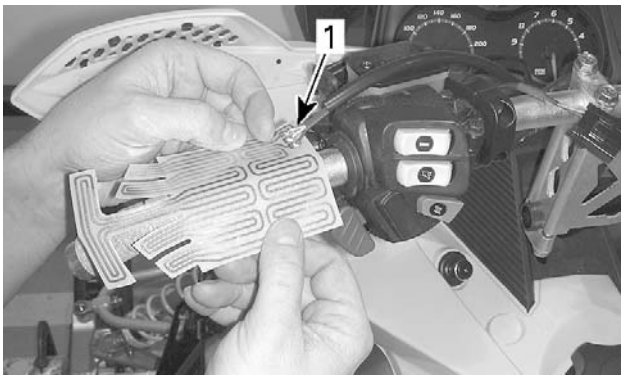

TYPICAL — HEATER ALIGNMENT
1. Heater wire position (LH front, RH rear)

5. Apply firm pressure to heater to assure proper adherence to cork insulator.

NOTE: The same heater element is used for both the LH and RH sides. Therefore, the electrical wiring will be in front of the handlebar on the LH side, and behind the handlebar (towards driver) on the RH side.

6. Apply two turns of black electrical tape at each of the four locations illustrated so that it covers the edges of the heater element and prevents snagging and damage to the element during rubber grip installation.

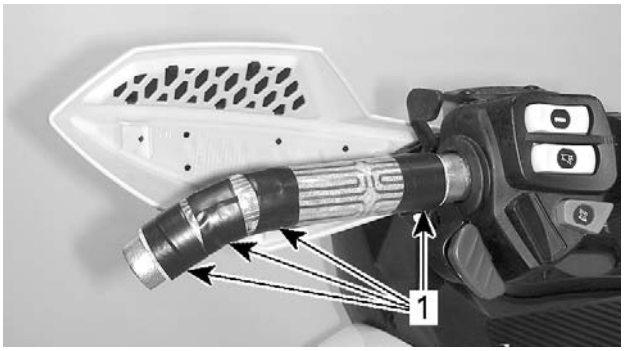

TYPICAL
1. Electrical tape application (4x)

NOTE: It is highly important to apply tape so that it fully secures the electrical wire connections. This will ease installation of the rubber hand grip and prevent undue stress to the connections.

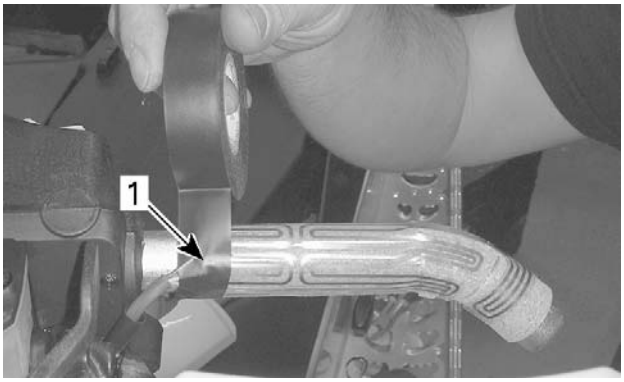

TYPICAL — IMPORTANT
1. Tape application over wire connections

7. Install rubber hand grip, refer to *STEERING SYSTEM* subsection for detail.
8. Route wiring as noted during the removal procedure.
9. Insert wire in housing, refer to *WIRING DIAGRAM* for wire color and pin number locations.

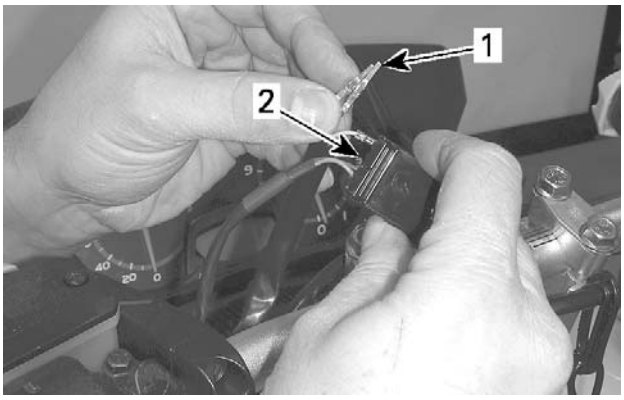

TYPICAL
1. *Heater wire terminals*
2. *Insertion through back of connector*

10. Install locking ties to secure the heater wire as it was routed originally..

⚠ WARNING

To ensure RH heater wires does not prevent smooth operation of throttle lever, it must be passed straight through the housing without any slack, and secured with a locking tie on the emergency engine cut-off switch housing.

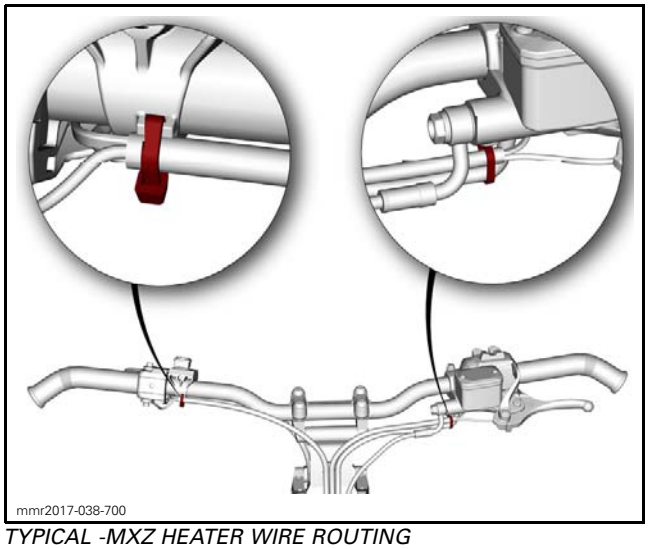

TYPICAL -MXZ HEATER WIRE ROUTING

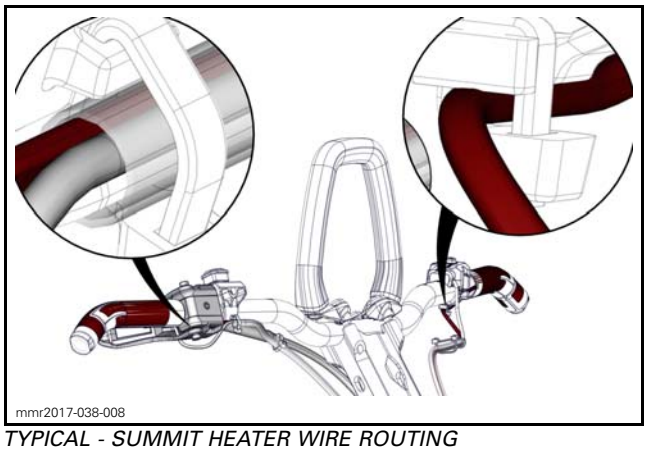

TYPICAL - SUMMIT HEATER WIRE ROUTING

NOTICE **Ensure LH heater wires are properly routed through multifunction switch housing to prevent them from being pinched when installing housing cover. Pinched or damaged wires may result in a short circuit.**

11. Provide electrical power to the heaters for testing.
12. Using the hand grip heat switch, turn on the hand grip heaters and ensure they are functioning correctly.

TESTING THROTTLE LEVER HEAT SWITCH

NOTE: On models with the compact digital gauge, there is only one switch that controls both the heated grips and heated throttle lever.

1. Using the FLUKE 115 MULTIMETER (P/N 529 035 868), select the Ω position.
2. Test throttle lever heat switch and circuits as per table.

Models with console switches

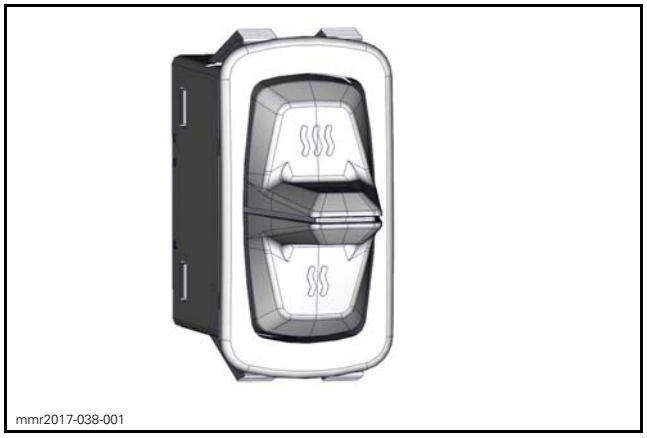

THROTTLE LEVER HEAT SWITCH TEST			
SWITCH SELECTION	TERMINAL		RESISTANCE
UP	GRIP-6	GRIP-8	Close to 0 Ω
	GRIP-6	GRIP-5	Infinite (OL)
DOWN	GRIP-6	GRIP-8	Infinite (OL)
	GRIP-6	GRIP-5	Close to 0 Ω

Models with multifunction switches

mmr2017-038-002

THROTTLE LEVER HEAT SWITCH TEST			
SWITCH SELECTION	TERMINAL		RESISTANCE
UP	SH-1	SH-9	Close to 0 Ω
	SH-1	SH-3	Infinite (OL)
DOWN	SH-1	SH-9	Infinite (OL)
	SH-1	SH-3	Close to 0 Ω

If continuity test is as per specification, check wiring to gauge connector.

If continuity test is out of specification, check switch circuit as per wiring diagram. If good, replace switch.

TESTING HANDLEBAR HEATED GRIP SWITCH

NOTE: On models with the compact digital gauge, there is only one switch that controls both the heated grips and heated throttle lever.

1. Test throttle lever heat switch and circuits as per table.

Models with console switches

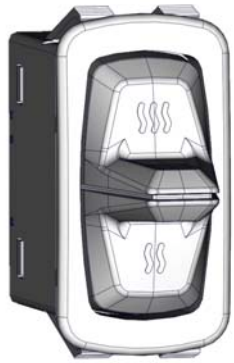

mmr2017-038-001

HEATED GRIP HEAT SWITCH TEST			
SWITCH SELECTION	TERMINAL		RESISTANCE
UP	GRIP-6	GRIP-8	Close to 0 Ω
	GRIP-6	GRIP-5	Infinite (OL)
DOWN	GRIP-6	GRIP-8	Infinite (OL)
	GRIP-6	GRIP-5	Close to 0 Ω

Models with multifunction switches

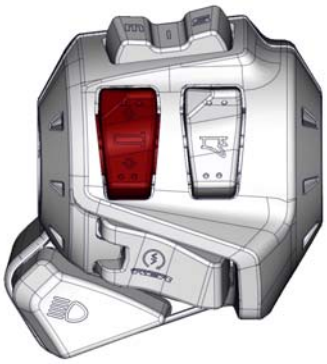

mmr2017-038-006

HEATED GRIP HEAT SWITCH TEST			
SWITCH SELECTION	TERMINAL		RESISTANCE
UP	SH-1	SH-10	Close to 0 Ω
	SH-1	SH-4	Infinite (OL)
DOWN	SH-1	SH-10	Infinite (OL)
	SH-1	SH-4	Close to 0 Ω

If continuity test is as per specification, check wiring to gauge connector.

If continuity test is out of specification, check switch circuit as per wiring diagram. If good, replace switch.

HEATED SEATS AND PASSENGER HEATED GRIPS

Testing Heated Seats

Unplug connector and measure resistance as per following table.

HEATED SEAT CONNECTOR - PROBE		RESISTANCE (APPROXIMATELY) @ 20°C (68°F)
YE wire	BK wire	32 Ω
RD wire		17.5 Ω

If resistance is not as specified, replace heated seat.

If resistance is as specified, continue testing.

Start and idle engine.

NOTE: On some models, you may need to increase RPM to above 2000 RPM in order to power this secondary 12v circuit.

Measure voltage at the heated seat connector as indicated in following table.

HEATED SEAT SWITCH POSITION	HEATED SEAT CONNECTOR - PROBE		VOLTAGE (APPROXIMATELY)
High (single seat) Front + rear (double seat)	YE wire	BK wire	12Vdc
	RD wire		
Low (single seat) Rear only (double seat)	YE wire		12Vdc
	RD wire		0Vdc

If voltage is not as indicated, test switch and/or wires from element to switch. Refer to *WIRING DIAGRAM*.

Testing Passenger Heated Grips (Left or Right)

Unplug connector and measure resistance as per following table.

PROBE		RESISTANCE (APPROXIMATELY) @ 20°C (68°F)
OG wire	BK wire	9.5 Ω
OG/VT wire	BK wire	19 Ω

If resistance is not as specified, replace heated grip.

If resistance is as specified, continue testing.

Start and idle engine.

NOTE: On some models, you may need to increase RPM to above 2000 RPM in order to power this secondary 12v circuit.

Measure voltage at the heated grip connector as indicated in following table.

HEATED GRIP SWITCH POSITION	PROBE		VOLTAGE (APPROXIMATELY)
High	OG wire	BK wire	12Vdc
	OG/VT wire		0Vdc
Low	OG wire		0Vdc
	OG/VT wire		12Vdc

If voltage is not as indicated, test switch and/or wires from element to switch. Refer to *WIRING DIAGRAM*.

Testing Heated Seat and Grip Switches

Measure switch resistance as per following table.

SWITCH POSITION	PROBE		RESISTANCE
High	Pin 6	Pin 8	Close to 0 Ω
Off	Pin 6	Pin 8	O.L.
		Pin 5	O.L.
Low	Pin 6	Pin 5	Close to 0 Ω

If resistance is not as specified, replace switch.

If resistance is as specified, continue testing.

Start and idle engine.

NOTE: On some models, you may need to increase RPM to above 2000 RPM in order to power this secondary 12v circuit.

Measure voltage at the switch connector as indicated in following table.

SWITCH POSITION	PROBE		VOLTAGE (APPROXIMATELY)
Any	Pin 6	Chassis ground	12Vdc

If voltage is not as indicated, test power distribution circuit to switch. Refer to *WIRING DIAGRAM*.

DRIVE BELT (600R E-TEC)

SERVICE TOOLS

Description	Part Number	Page
TENSIOMETER	414 348 200	185

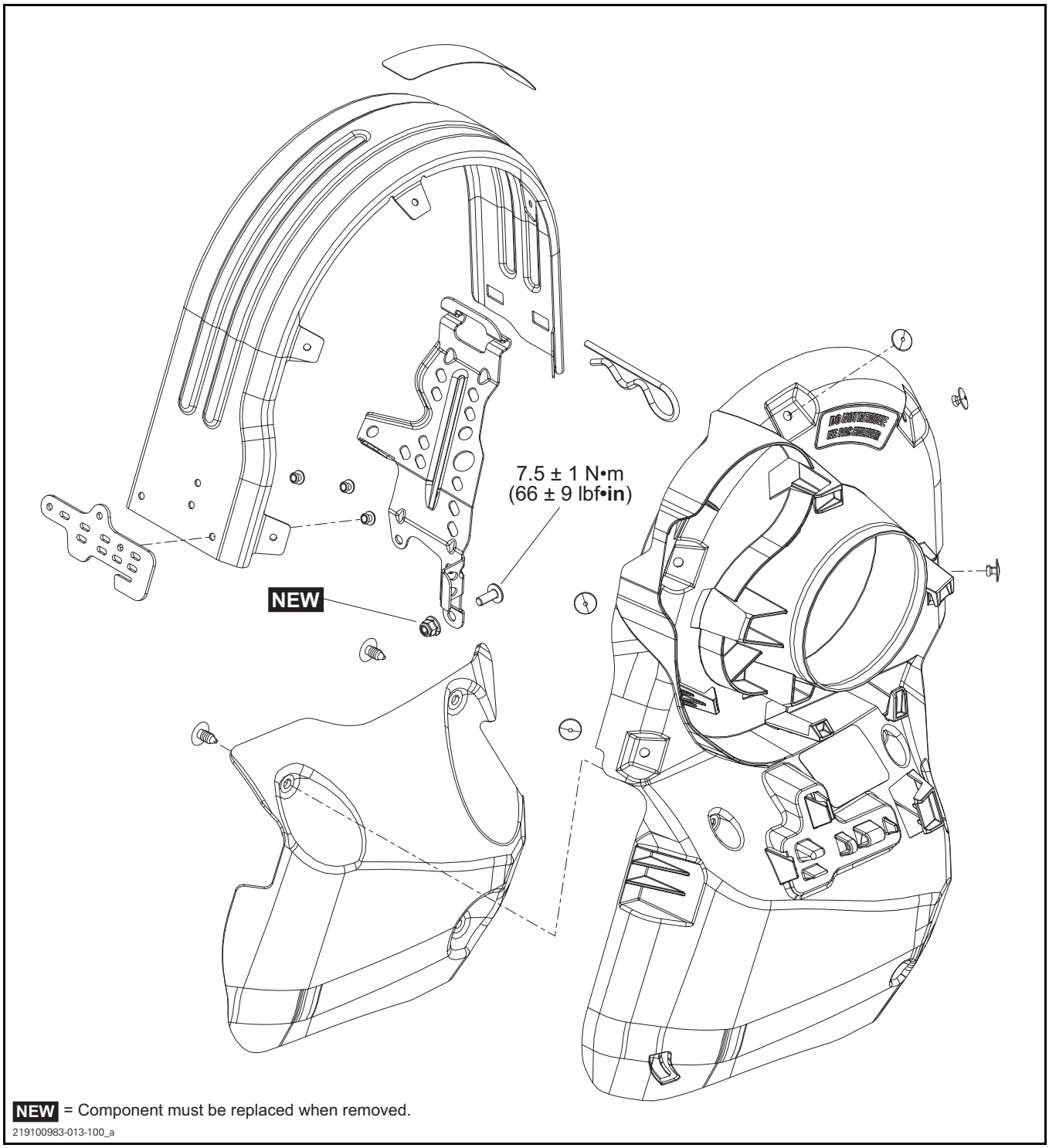

GENERAL

DRIVE BELT APPLICATION

Always use the drive belt specified in the BRP *PARTS CATALOG* as applicable to vehicle and engine model.

TROUBLESHOOTING

VEHICLE CREEPS FORWARD AT IDLE

1. **Improper drive belt height (too high)**
   - *Refer to ADJUSTING THE DRIVE BELT HEIGHT procedure in this subsection.*

ENGINE STALLS WHEN ENGAGING RER

1. **Improper drive belt height (too high)**
   - *Refer to ADJUSTING THE DRIVE BELT HEIGHT procedure in this subsection.*

PROCEDURES

DRIVE BELT GUARD

NOTE: Belt guard is purposely made slightly oversize to maintain tension on its pins and retainers preventing undue noise and vibration.

Removing the Drive Belt Guard

1. Remove LH side panel.
2. Remove retaining pin.

219100889-042-001_a

3. Lift rear portion of guard then release from front tabs.

Installing the Drive Belt Guard

1. Insert belt guard tab in front support slot.

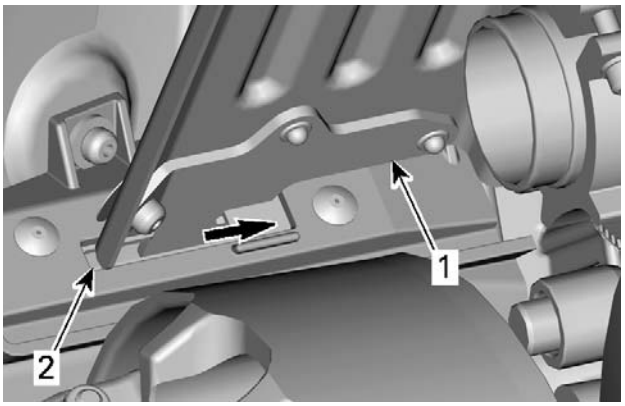

mmr2013-034-002_a

1. *Belt guard tab*
2. *Front support slot*

2. Push drive belt guard toward engine then toward front of vehicle.

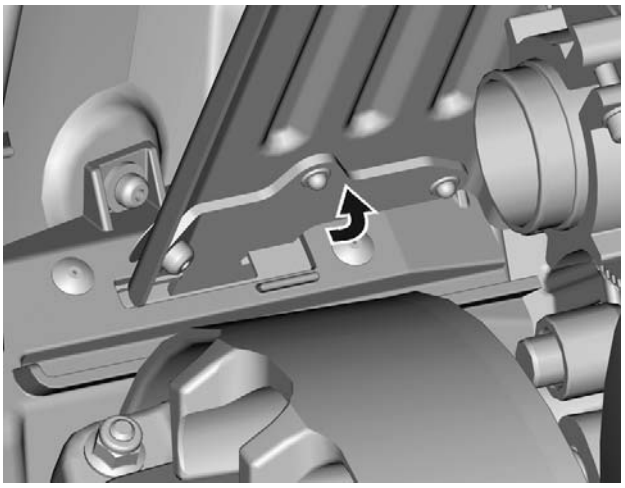

mmr2013-034-006_a

3. Position rear portion of the drive belt guard over the retainer and secure it using the retaining pin.

219100889-042-001_a

DRIVE BELT GUARD SUPPORT

Removing the Drive Belt Guard Support

1. Remove the drive belt guard.
2. Remove screws securing the support to vehicle.

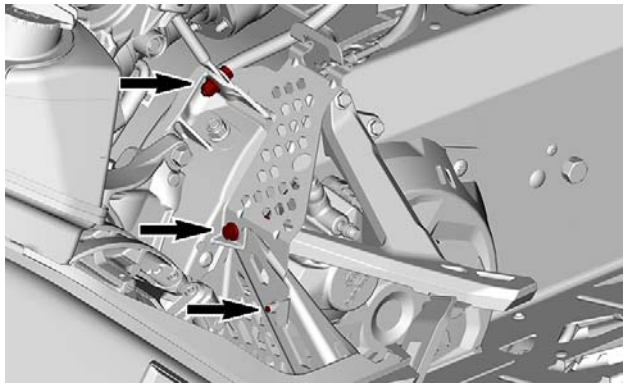

mmr2017-039-003_a

Installing the Drive Belt Guard Support

The installation is the reverse of the removal procedure. However pay attention to the following.

TIGHTENING TORQUE	
Drive belt guard support Torx screw	7.5 N•m ± 1 N•m (66 lbf•**in** ± 9 lbf•**in**)
Hexagonal flange elastic nut	10 N•m ± 2 N•m (89 lbf•**in** ± 18 lbf•**in**)

DRIVE BELT

Removing the Drive Belt

1. Remove tether cord cap from engine cut-off switch.
2. Remove LH side panel.
3. Remove drive belt guard, refer to *REMOVING THE DRIVE BELT GUARD*.
4. Insert the driven pulley expander provided in the tool kit in the threaded hole on the adjuster hub as illustrated.

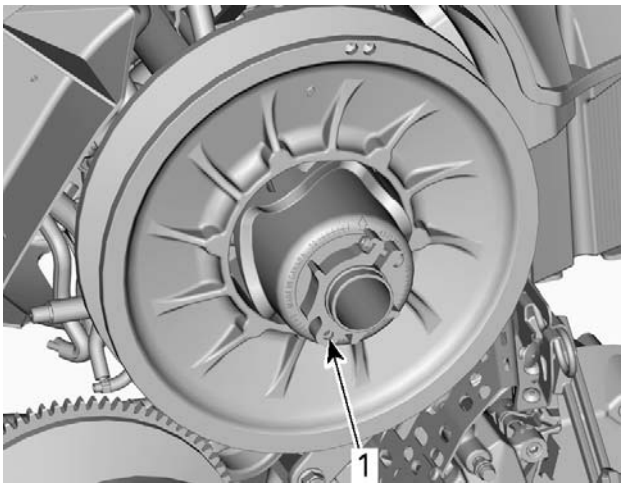

mmr2013-034-005_a

1. PULLEY expander to be installed here - on Adjuster hub

5. Open the driven pulley by screwing the tool in.
6. Remove the belt by slipping it over the top of the driven pulley, then out of the drive pulley.

Inspecting the Drive Belt

Inspect belt for:
- Cracks
- Fraying
- Abnormal wear (uneven wear, wear on one side, missing cogs, torn fabric).

If abnormal wear is noted, the probable cause could be:
- Pulley misalignment
- Excessive RPM with frozen track
- Fast starts without warm-up period
- Scratched or rusty sheave
- Oil on belt
- Distorted spare belt.

Check drive belt width. Replace the drive belt if its width is under minimum recommended specification.

DRIVE BELT WIDTH	
NEW	WEAR LIMIT
38.3 mm (1.508 in)	35.9 mm (1.413 in)

Installing the Drive Belt

1. If necessary, open the driven pulley, refer to *REMOVING THE DRIVE BELT*.
2. Insert drive belt in the drive pulley, then pull it over the driven pulley.

NOTICE **Do not force or use tools to pry the belt into place, as this could cut or break the cords in the belt.**

NOTE: The maximum drive belt life span is obtained when the belt is installed with the arrows on the belt pointing in the direction of rotation.

mmr2017-039-004

3. Unscrew and remove the driven pulley expander from the driven pulley.
4. Rotate the driven pulley several times to properly set the belt between the sheaves.
5. Adjust drive belt height. Refer to *ADJUSTING THE DRIVE BELT HEIGHT* procedure.
6. Install drive belt guard, refer to *INSTALLING THE DRIVE BELT GUARD*.
7. Install LH side panel.

Adjusting the Drive Belt Height

1. Remove tether cord cap from engine cutout switch.
2. Remove LH side panel.
3. Remove drive belt guard, refer to *REMOVING THE DRIVE BELT GUARD*.
4. Loosen the clamping screw.

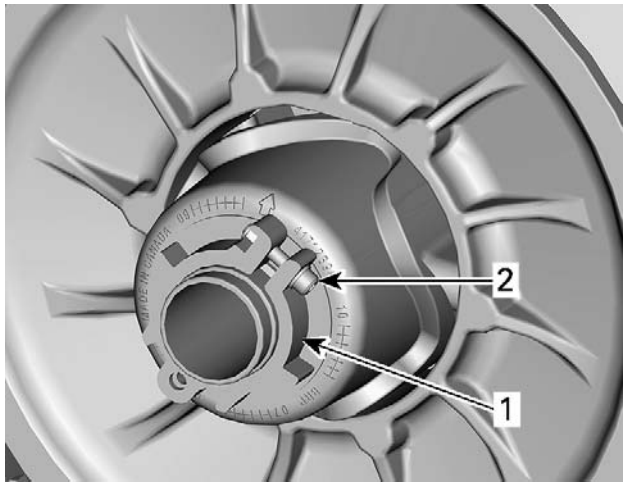

mmr2013-034-009_a

1. Adjustment ring
2. Clamping screw

5. Using the suspension adjustment tool provided in the tool kit, turn the adjustment ring 1/4 turn at a time then rotate the driven pulley to properly set the belt between the pulley sheaves.

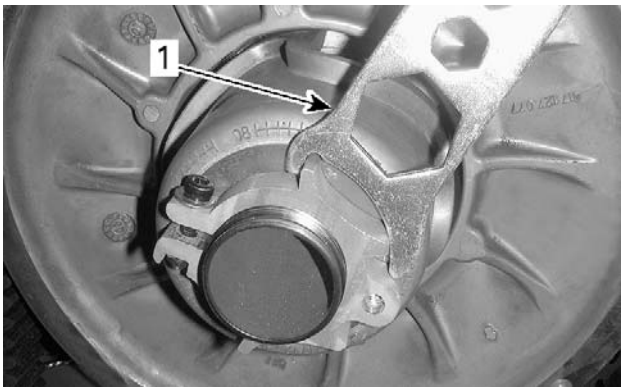

mmr2013-034-010_a

1. Suspension adjustment tool

NOTE: The adjustment ring has left hand treads.

600 EFI

Repeat step 5 until the drive belt outer surface is even with the driven pulley edge.

mmo2012-005-981_a

600 EFI - PRELIMINARY SETTING
1. Drive belt outer surface is even with the driven pulley edge

850 E-TEC

Repeat step 5 until the cord of drive belt is just hidden by the driven pulley edge.

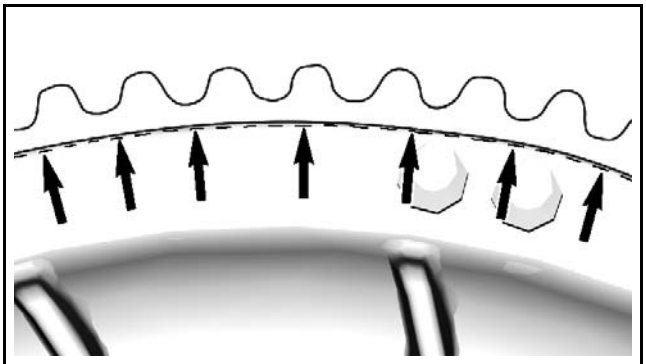
520001896-005_a

850 E-TEC - PRELIMINARY SETTING

600R E-TEC

Repeat step 5 until the lowest portion of the cogs on the external surface of drive belt is even with the driven pulley edge.

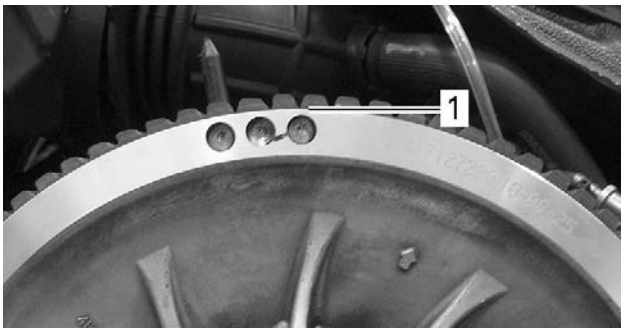

600R E-TEC - PRELIMINARY SETTING
1. Lowest portion of cogs even with external surface of drive belt

All engines

NOTE: Turning the adjustment ring counterclockwise lowers the belt in the pulley. Turning the ring clockwise raises the belt in the pulley.

6. Tighten the adjustment ring clamping screw.

TIGHTENING TORQUE	
Adjustment ring clamping screw	5.5 N•m ± 0.5 N•m (49 lbf•**in** ± 4 lbf•**in**)

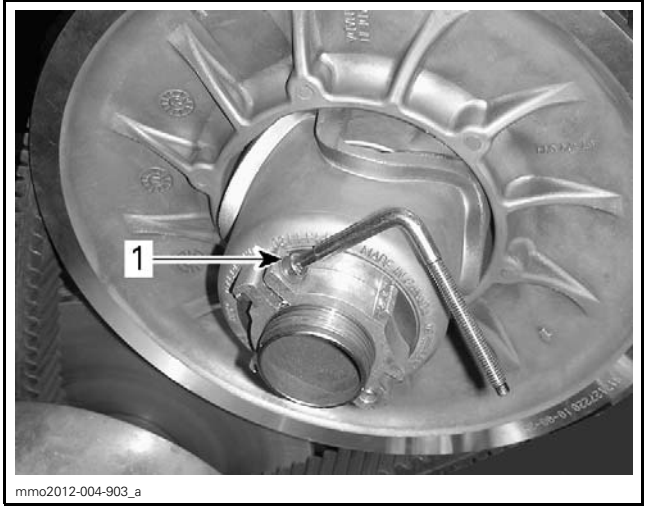

1. Clamping screw

7. Install belt guard, refer to *INSTALLING THE DRIVE BELT GUARD*.
8. Install LH side panel.
9. Start engine and check if vehicle creeps.
   9.1 If vehicle does not creep, adjustment is complete.
   9.2 If vehicle creeps, check the drive belt deflection.

Reverse Activation

Reverse may not activate or may be harder to activate if the belt is positioned too high in the driven pulley. If reverse activation does not work properly, ensure the drive belt is properly adjusted.

Adjust the drive belt lower in the driven pulley if needed.

Verifying the Drive Belt Deflection

1. Make sure drive belt height is adjusted (preliminary setting).
2. Position a reference rule on drive belt.
3. Use the TENSIOMETER (P/N 414 348 200) as explained below.
4. Set deflection as per following table using bottom O-ring.

DRIVE BELT DEFLECTION	
DRIVE BELT DEFLECTION SETTING	32 mm ± 5 mm (1.26 in ± .2 in)

DEFLECTION SETTING
1. Bottom O-ring

5. Place upper O-ring to 0 kgf (0 lbf).

LOAD READING
1. Upper O-ring

6. Apply pressure until bottom O-ring (deflection) is flush with edge of rule.

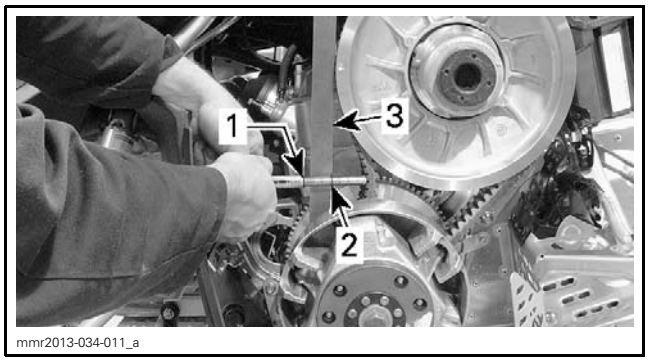

TYPICAL
1. *Upper O-ring — load*
2. *Bottom O-ring — deflection*
3. *Reference rule*

7. Read drive belt load. Compare result with the following table.

DRIVE BELT DEFLECTION	
DRIVE BELT LOAD READING	11.30 kgf (25 lbf)

8. If deflection is within specification, drive belt is properly adjusted.
9. If deflection is out of specification, try the following:
   – Lower drive belt height from initial setting.
   – Try another drive belt.
10. If proper load still cannot be obtained, check the following:
   – Inspect engine supports.
   – Inspect countershaft and bearing.
   – Inspect chassis for damages.

DRIVE BELT (850 E-TEC AND 850 E-TEC TURBO)

SERVICE TOOLS

Description	Part Number	Page
ECM ADAPTER TOOL	529 036 166	190
TENSIOMETER	414 348 200	193

Models Equipped with a 850 E-TEC Turbo

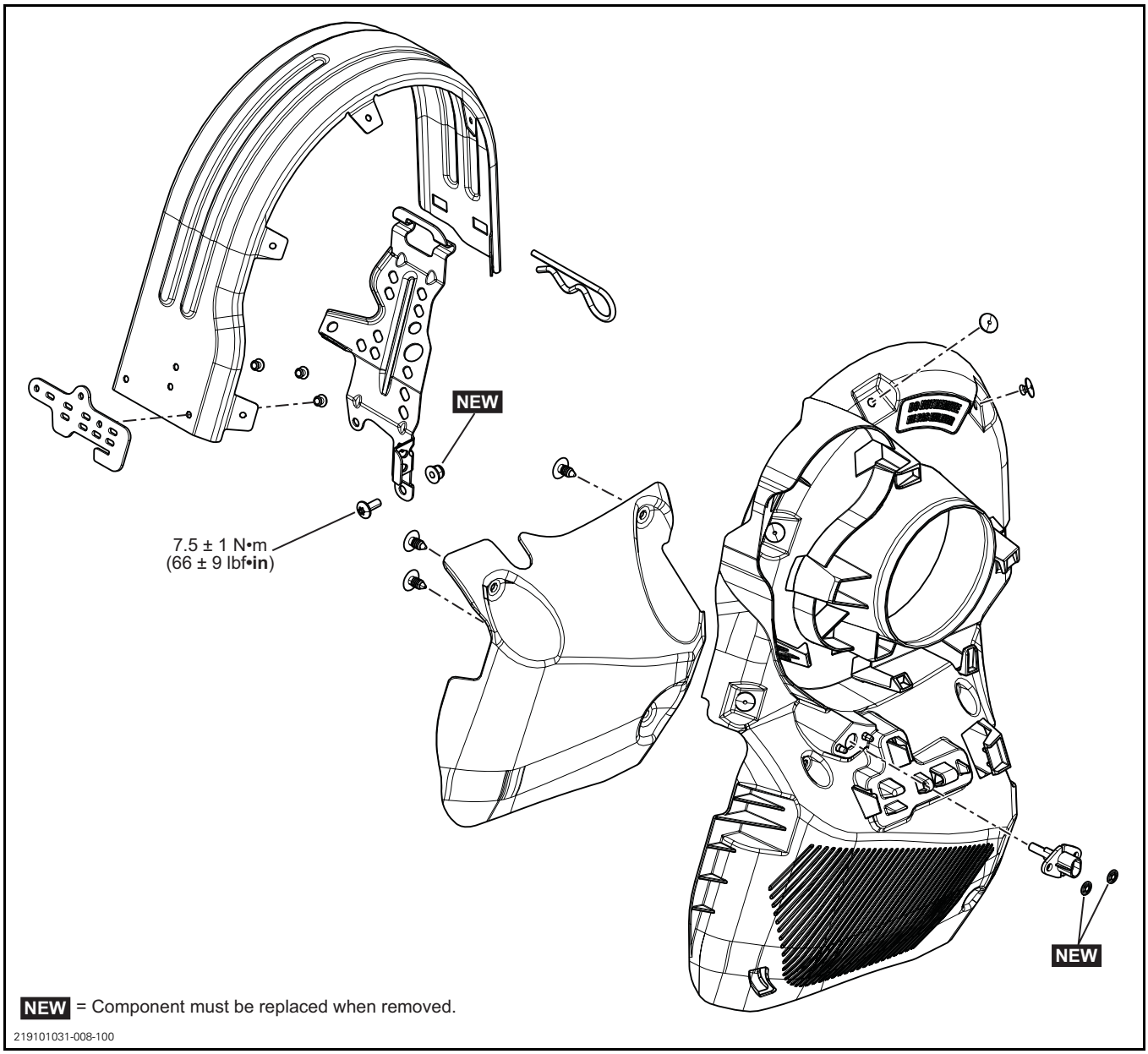

All Other Models

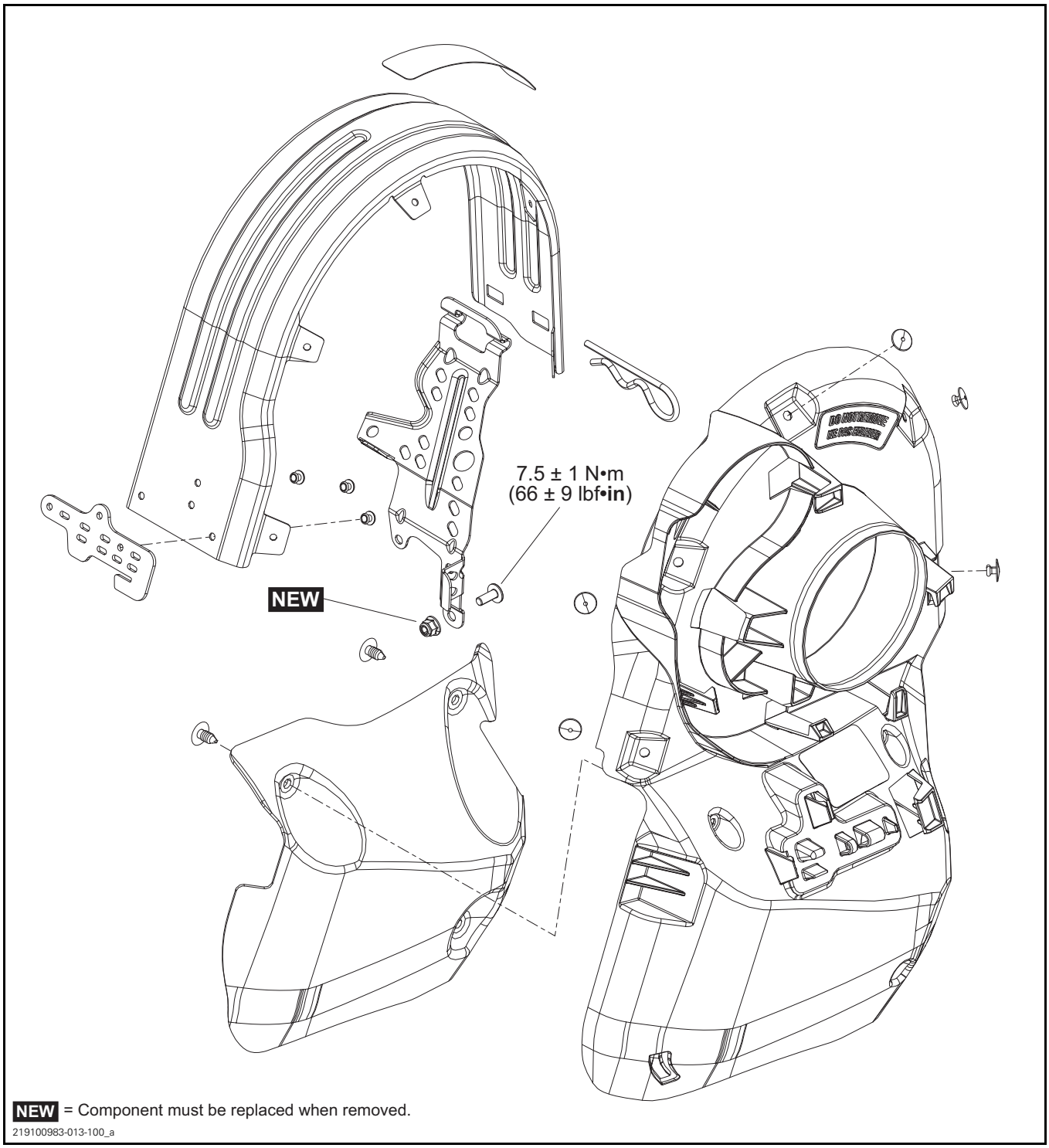

GENERAL

DRIVE BELT APPLICATION

Always use the drive belt specified in the BRP *PARTS CATALOG* as applicable to vehicle and engine model.

TROUBLESHOOTING

VEHICLE CREEPS FORWARD AT IDLE

1. Improper drive belt height (too high)
   - *Refer to ADJUSTING THE DRIVE BELT HEIGHT procedure in this subsection.*

ENGINE STALLS WHEN ENGAGING RER

1. Improper drive belt height (too high)
   - *Refer to ADJUSTING THE DRIVE BELT HEIGHT procedure in this subsection.*

PROCEDURES

DRIVE BELT GUARD

NOTE: Belt guard is purposely made slightly oversize to maintain tension on its pins and retainers preventing undue noise and vibration.

Removing the Drive Belt Guard

1. Remove LH side panel.

Models Equipped with a 850 E-TEC Turbo

2. Disconnect the drive belt temperature sensor.

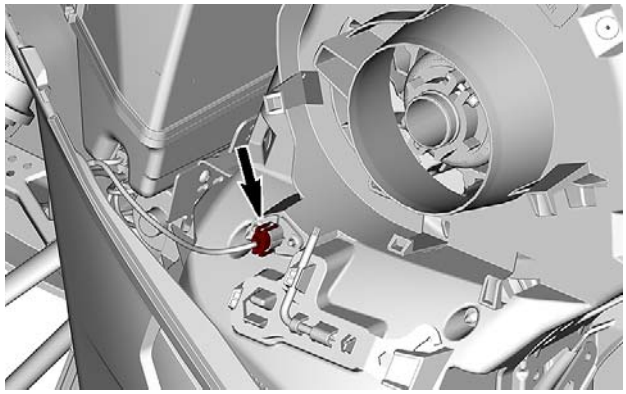

219101031-008-001

All Models

3. Remove retaining pin.

219100889-042-001_a

4. Lift rear portion of guard then release from front tabs.

Installing the Drive Belt Guard

1. Insert belt guard tab in front support slot.

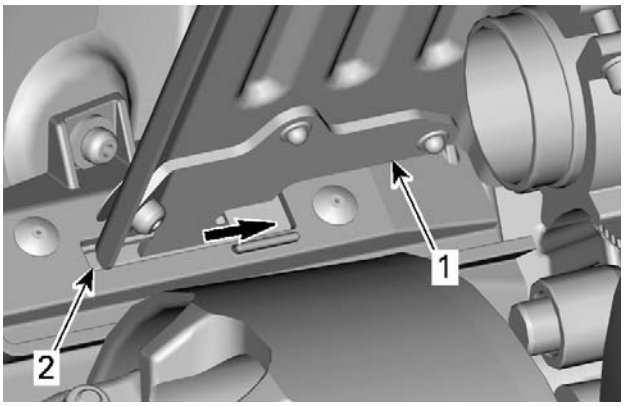

mmr2013-034-002_a

1. *Belt guard tab*
2. *Front support slot*

2. Push drive belt guard toward engine then toward front of vehicle.

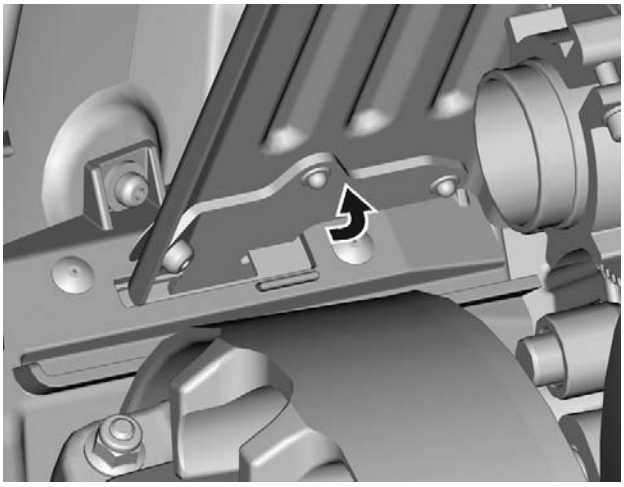

mmr2013-034-006_a

3. Position rear portion of the drive belt guard over the retainer and secure it using the retaining pin.

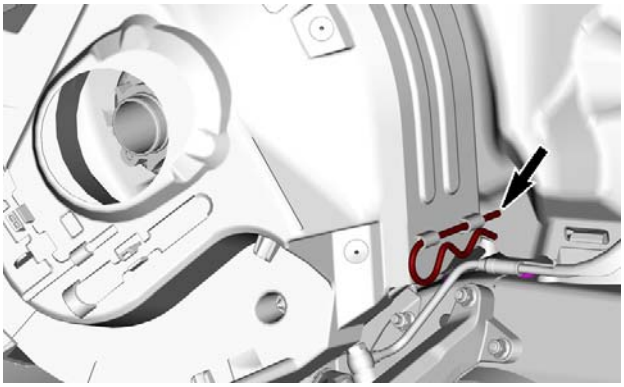
219100889-042-001_a

Models Equipped with a 850 E-TEC Turbo

4. Connect the drive belt temperature sensor.

DRIVE BELT GUARD SUPPORT

Removing the Drive Belt Guard Support

1. Remove the drive belt guard.
2. Remove screws securing the support to vehicle.

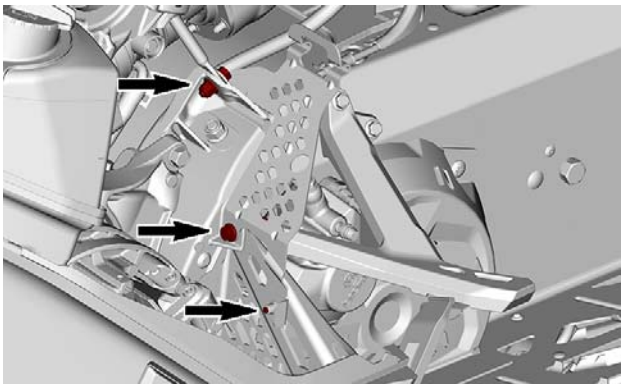
mmr2017-039-003_a

Installing the Drive Belt Guard Support

The installation is the reverse of the removal procedure. However pay attention to the following.

TIGHTENING TORQUE	
Drive belt guard support Torx screw	7.5 N•m ± 1 N•m (66 lbf•**in** ± 9 lbf•**in**)
Hexagonal flange elastic nut	10 N•m ± 2 N•m (89 lbf•**in** ± 18 lbf•**in**)

DRIVE BELT TEMPERATURE SENSOR (BTS)

Testing the BTS

Sensor Test with BUDS2

1. Connect vehicle to the .BRP diagnostic software (BUDS2). DO NOT START THE ENGINE YET.
2. In BUDS2, select the following:
   - **Measurements** page
   - **ECM** button
   - **Custom** tab.
3. Monitor the **Transmission Belt Temperature**. It should indicate ambient temperature. Otherwise, perform the *RESISTANCE TEST*.

Sensor Resistance Test

1. Disconnect the BTS connector.
2. Measure sensor resistance.

BTS		MEASUREMENT
Pin 1	Pin 2	Refer to *SENSOR TEMPERATURE TABLE*

BTS TEMPERATURE TABLE	
TEMPERATURE	**RESISTANCE**
-40°C (-40°F)	43610 Ω
0°C (32°F)	5705 Ω
20°C (68°F)	2436 Ω
110°C (230°F)	141 Ω
150°C (302°F)	57 Ω
200°C (392°F)	23 Ω

If resistance is out of specifications, replace BTS.

If resistance tests good, carry out the following steps.

3. Reconnect the BTS connector.
4. Disconnect the ECM-A connector from the ECM and connect it to the ECM adapter.

REQUIRED TOOL	
ECM ADAPTER TOOL (P/N 529 036 166)	

IMPORTANT: Move wiring harness back and forth near the sensor connector while measuring the resistance. If the resistance value varies as the harness is moved, check sensor connections.

ECM ADAPTER		MEASUREMENT
B1	B2	Refer to *SENSOR TEMPERATURE TABLE*

If resistance value is incorrect, repair the connectors or replace the wiring harness between ECM connector and the sensor.

Drive Belt Temperature Sensor Replacement

1. Remove drive belt guard, refer to *REMOVING THE DRIVE BELT GUARD*.
2. Remove sensor push nuts.
3. Pull out BTS.

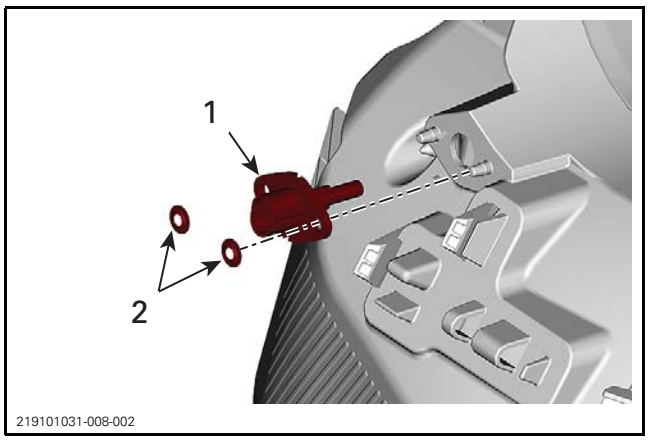

1. Belt temperature sensor (BTS)
2. Push nuts

4. Using new push nuts, secure the new BTS to the drive belt guard.

DRIVE BELT

Removing the Drive Belt

1. Remove tether cord cap from engine cut-off switch.
2. Remove LH side panel.
3. Remove drive belt guard, refer to *REMOVING THE DRIVE BELT GUARD*.
4. Insert the driven pulley expander provided in the tool kit in the threaded hole on the adjuster hub as illustrated.

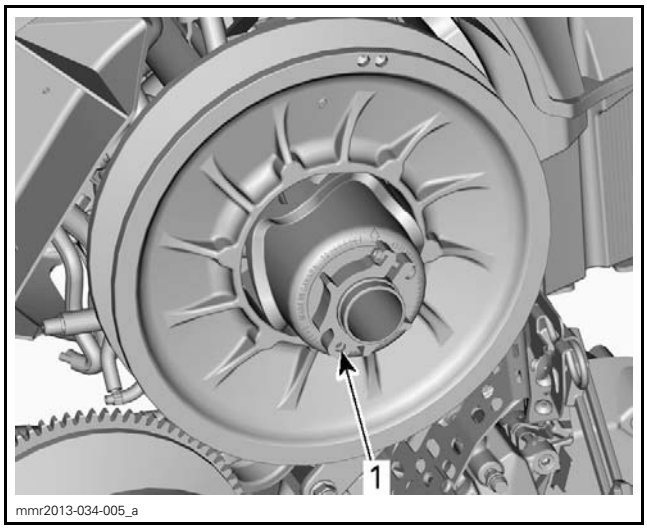

1. PULLEY expander to be installed here - on Adjuster hub

5. Open the driven pulley by screwing the tool in.
6. Remove the belt by slipping it over the top of the driven pulley, then out of the drive pulley.

Inspecting the Drive Belt

Inspect belt for:
- Cracks
- Fraying
- Abnormal wear (uneven wear, wear on one side, missing cogs, torn fabric).

If abnormal wear is noted, the probable cause could be:
- Pulley misalignment
- Excessive RPM with frozen track
- Fast starts without warm-up period
- Scratched or rusty sheave
- Oil on belt
- Distorted spare belt.

Check drive belt width. Replace the drive belt if its width is under minimum recommended specification.

DRIVE BELT WIDTH	
NEW	WEAR LIMIT
38.3 mm (1.508 in)	35.9 mm (1.413 in)

Installing the Drive Belt

1. If necessary, open the driven pulley, refer to *REMOVING THE DRIVE BELT*.
2. Insert drive belt in the drive pulley, then pull it over the driven pulley.

NOTICE **Do not force or use tools to pry the belt into place, as this could cut or break the cords in the belt.**

NOTE: The maximum drive belt life span is obtained when the belt is installed with the arrows on the belt pointing in the direction of rotation.

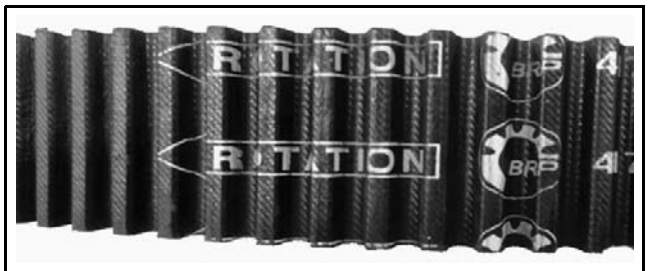

mmr2017-039-004

3. Unscrew and remove the driven pulley expander from the driven pulley.
4. Rotate the driven pulley several times to properly set the belt between the sheaves.
5. Adjust drive belt height. Refer to *ADJUSTING THE DRIVE BELT HEIGHT* procedure.
6. Install drive belt guard, refer to *INSTALLING THE DRIVE BELT GUARD*.
7. Install LH side panel.

Adjusting the Drive Belt Height

1. Remove tether cord cap from engine cutout switch.
2. Remove LH side panel.
3. Remove drive belt guard, refer to *REMOVING THE DRIVE BELT GUARD*.
4. Loosen the clamping screw.

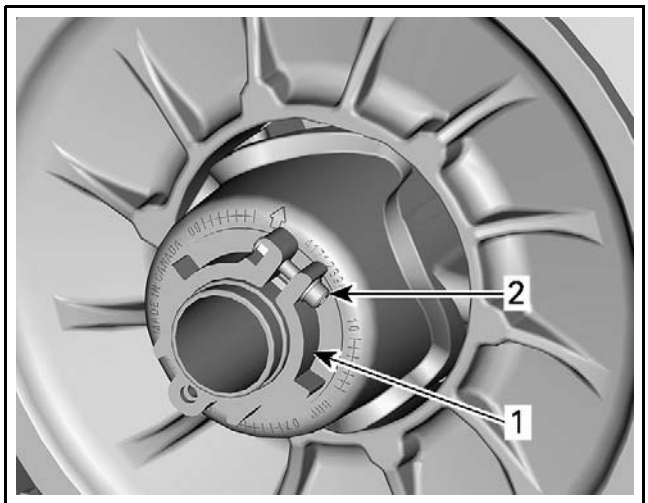

mmr2013-034-009_a

1. *Adjustment ring*
2. *Clamping screw*

5. Using the suspension adjustment tool provided in the tool kit, turn the adjustment ring 1/4 turn at a time then rotate the driven pulley to properly set the belt between the pulley sheaves.

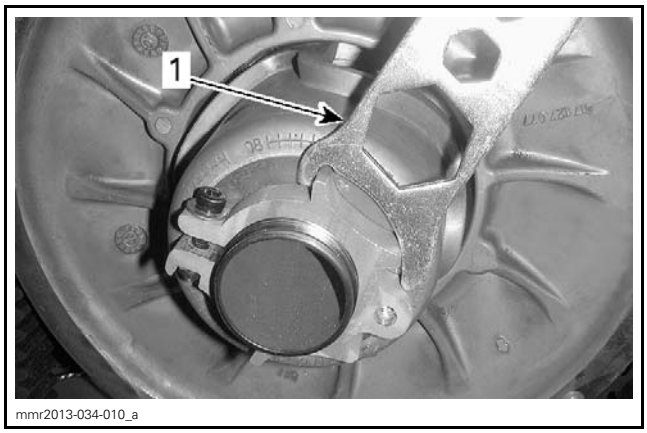

mmr2013-034-010_a

1. *Suspension adjustment tool*

NOTE: The adjustment ring has left hand treads.

All 850 E-TEC engines

Repeat step 5 until the cord of drive belt is just hidden by the driven pulley edge.

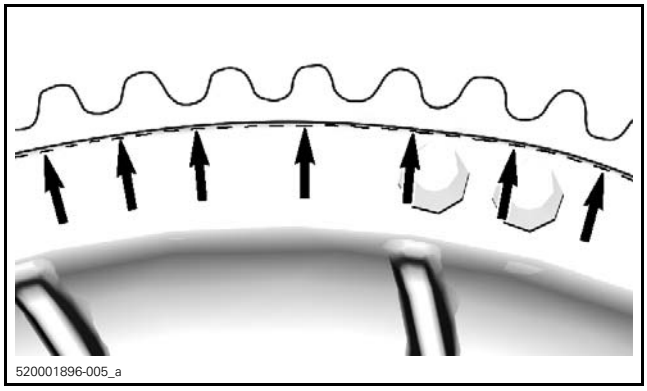
520001896-005_a

All other engines

Repeat step 5until the lowest portion of the cogs on the external surface of drive belt is even with the driven pulley edge.

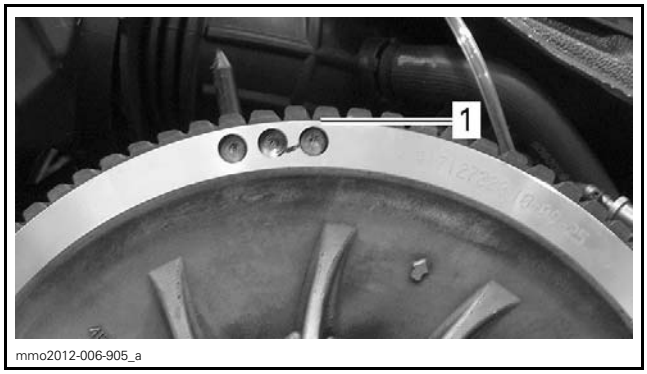

mmo2012-006-905_a

PRELIMINARY SETTING
1. *Lowest portion of cogs even with external surface of drive belt*

All engines

NOTE: Turning the adjustment ring counterclockwise lowers the belt in the pulley. Turning the ring clockwise raises the belt in the pulley.

6. Tighten the adjustment ring clamping screw.

TIGHTENING TORQUE	
Adjustment ring clamping screw	5.5 N•m ± 0.5 N•m (49 lbf•**in** ± 4 lbf•**in**)

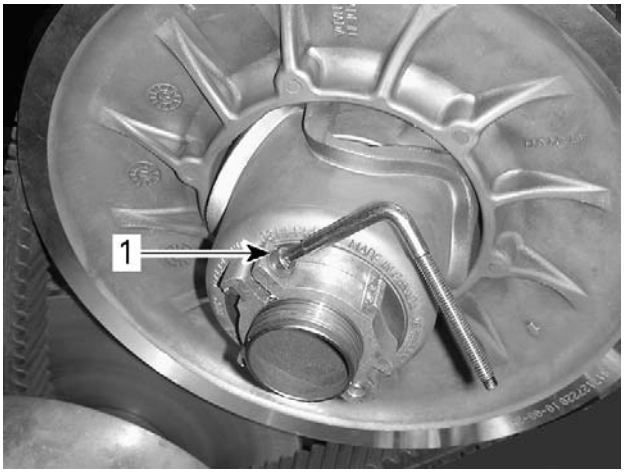

mmo2012-004-903_a

1. Clamping screw

7. Install belt guard, refer to *INSTALLING THE DRIVE BELT GUARD*.
8. Install LH side panel.
9. Start engine and check if vehicle creeps.
   9.1 If vehicle does not creep, adjustment is complete.
   9.2 If vehicle creeps, check the drive belt deflection.

Reverse Activation

Reverse may not activate or may be harder to activate if the belt is positioned too high in the driven pulley. If reverse activation does not work properly, ensure the drive belt is properly adjusted.

Adjust the drive belt lower in the driven pulley if needed.

Verifying the Drive Belt Deflection

1. Make sure drive belt height is adjusted (preliminary setting).
2. Position a reference rule on drive belt.
3. Use the TENSIOMETER (P/N 414 348 200) as explained below.
4. Set deflection as per following table using bottom O-ring.

DRIVE BELT DEFLECTION	
DRIVE BELT DEFLECTION SETTING	32 mm ± 5 mm (1.26 in ± .2 in)

mmr2009-133-003_b

DEFLECTION SETTING
1. Bottom O-ring

5. Place upper O-ring to 0 kgf (0 lbf).

mmr2009-133-003_a

LOAD READING
1. Upper O-ring

6. Apply pressure until bottom O-ring (deflection) is flush with edge of rule.

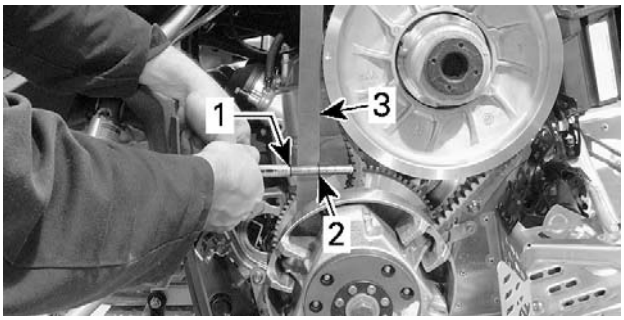

mmr2013-034-011_a

TYPICAL
1. Upper O-ring — load
2. Bottom O-ring — deflection
3. Reference rule

7. Read drive belt load. Compare result with the following table.

DRIVE BELT DEFLECTION	
DRIVE BELT LOAD READING	11.30 kgf (25 lbf)

8. If deflection is within specification, drive belt is properly adjusted.
9. If deflection is out of specification, try the following:
   – Lower drive belt height from initial setting.
   – Try another drive belt.
10. If proper load still cannot be obtained, check the following:
   – Inspect engine supports.
   – Inspect countershaft and bearing.
   – Inspect chassis for damages.

pDRIVE PULLEY

SERVICE TOOLS

Description	Part Number	Page
CIRCLIP INSTALLER/REMOVER	529 036 375	198–199
CLUTCH HOLDER	529 036 369	197, 206
DRIVE PULLEY OPENING TOOL	529 036 378	198, 202
DRIVE PULLEY SUPPORT	529 036 371	198–199, 201
GREASE INJECTOR	529 036 376	204
PDRIVE PULLER	529 036 370	197–198
PULLEY SPRING COMPRESSOR TOOL	529 036 373	198–199, 201–202
REMOVING AXLE TOOL	529 036 372	198, 200–202

SERVICE PRODUCTS

Description	Part Number	Page
CLUTCH AND PULLEY FLANGE CLEANER PRO S1	779244	203
ISOFLEX GREASE TOPAS NB 52	293 550 021	204

WITH CLICKER

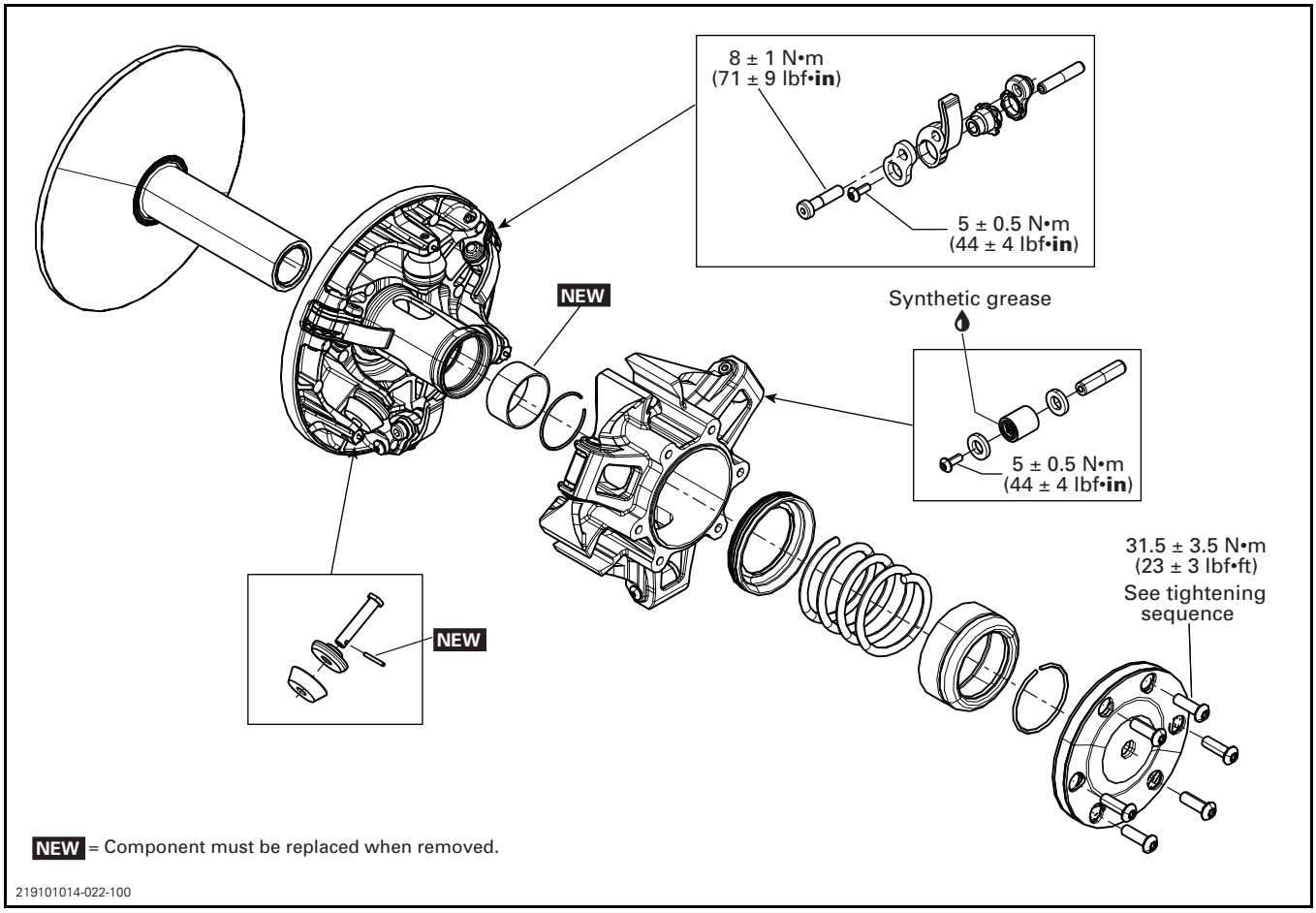

GENERAL

The pDrive pulleys are lubrication-free drive pulleys. Only the needle bearings inside the rollers need to be lubricated when replaced.

Always refer to appropriate *PARTS CATALOG* for replacement parts.

NOTICE **Never use any type of impact wrench for drive pulley removal and installation. The use of impact wrench could damage the drive pulley and modify the calibration.**

Some drive pulley components (like the spring and ramps) can be changed to improve vehicle performance in high altitude regions. A Service Bulletin provides information about calibration according to altitude.

NOTICE **Such modifications should only be performed by experienced mechanics since they can greatly affect vehicle performance. Verify spring specifications before installation. Do not only refer to the spring color code.**

⚠ WARNING

Any drive pulley repairs must be performed by an authorized Ski-Doo dealer. Subcomponent installation and assembly tolerances require strict adherence to procedures detailed.

During assembly/installation, use torque values as in the exploded view.

Clean threads before applying a threadlocker. Refer to *SELF-LOCKING FASTENERS* and *LOCTITE APPLICATION* at the beginning of this manual for complete procedure.

⚠ WARNING

Torque wrench tightening specifications must be strictly adhered to.
Locking devices must be replaced with new ones when removed (e.g.: locking tabs, elastic stop nuts, cotter pins, etc.).

ADJUSTMENT

The drive pulley is factory calibrated to transmit maximum engine power at a predefined RPM. Factors such as ambient temperature, altitude or surface condition may vary this critical engine RPM thus affecting snowmobile efficiency.

This adjustable drive pulley allows setting maximum engine RPM in the vehicle to maintain maximum power. The adjustment has an effect on high RPM only.

Ramp cam should be adjusted so that actual maximum engine RPM in vehicle matches the maximum horsepower RPM given in *TECHNICAL SPECIFICATIONS*.

To adjust, modify ramp end position by turning ramp cams (3x).

The ramp and the right lever have a notch while ramp cam has 5 positions numbered 1 to 5.

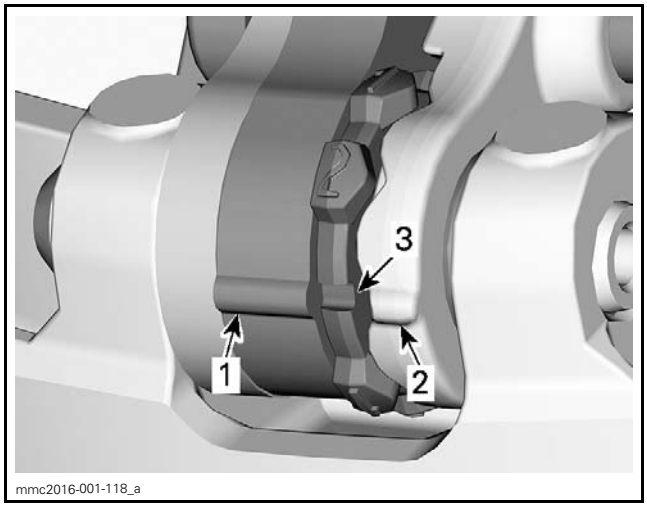

1. *Ramp notch*
2. *Right lever notch*
3. *Cam position (here #3)*

Each number modifies maximum engine RPM by about 200 RPM.

Lower numbers decrease engine RPM in steps of 200 RPM and higher numbers increase it in steps of 200 RPM.

For example: If ramp cam is set at position 3 and is changed to position 5, the maximum engine RPM is increased by about 400 RPM.

MODIFYING THE RAMP CAM SETTING

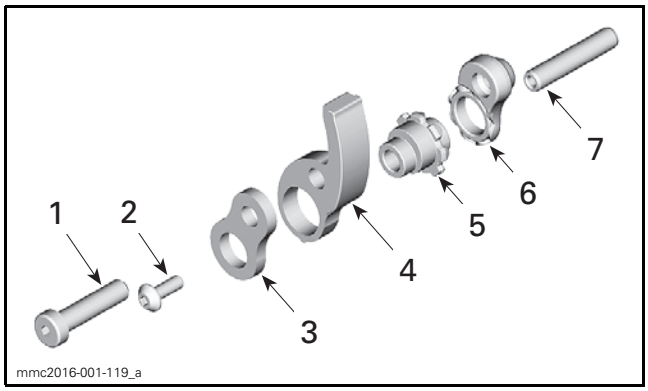

1. *Pivot*
2. *Axle retaining screw*
3. *Left lever*
4. *Ramp*
5. *Cam*
6. *Right lever*
7. *Axle*

1. Loosen the pivot.

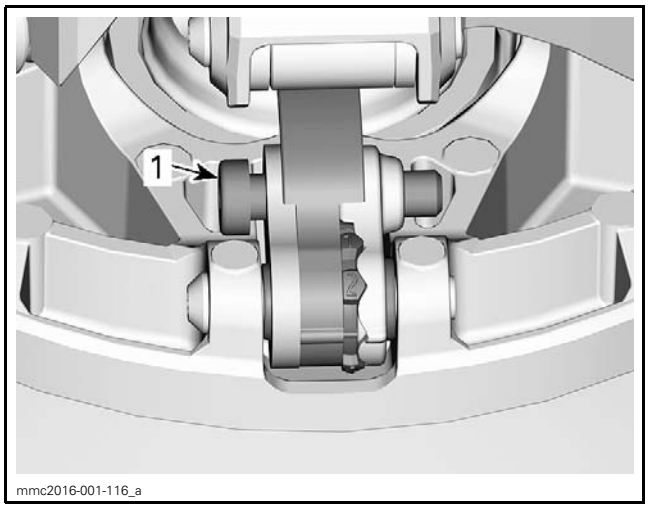

1. *Pivot*

2. Move right lever aside to be able to turn the cam.
3. Turn cam to the desired position.

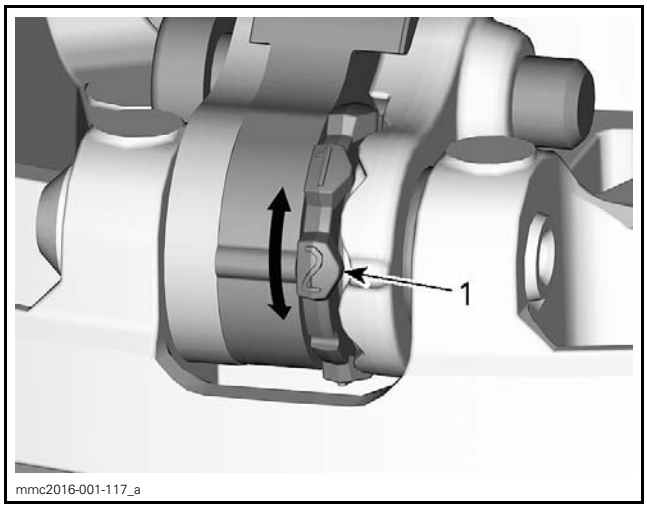

1. *Desired cam position (here #2)*

TIGHTENING TORQUE	
Pivot	8 N•m ± 1 N•m (71 lbf•**in** ± 9 lbf•**in**)

For factory setting, refer to *SPECIFICATIONS (VEHICLE)*.

NOTICE **Always adjust all 3 cams and make sure they are all set at the same number.**

PROCEDURES

DRIVE PULLEY

Removing the Drive Pulley

REQUIRED TOOLS	
CLUTCH HOLDER (P/N 529 036 369)	
PDRIVE PULLER (P/N 529 036 370)	

1. Remove drive belt. Refer to *DRIVE BELT* subsection.
2. Remove the drive pulley bolt.
   2.1 Secure the drive pulley with the clutch holder.
   2.2 Using a breaker bar, remove the drive pulley bolt and its conical spring washer.

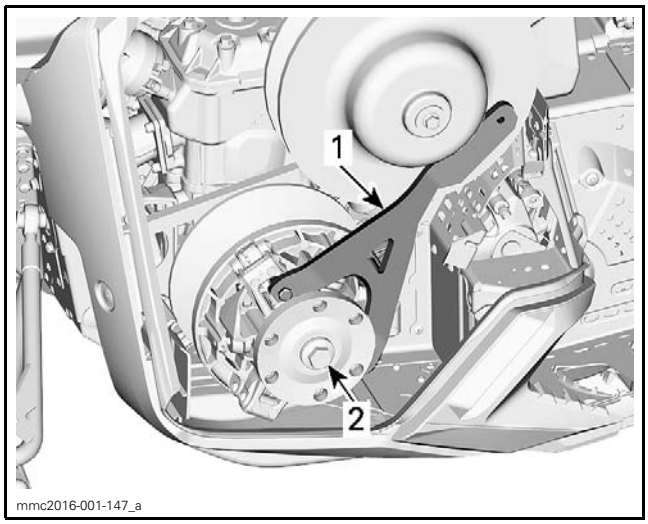

1. Clutches holder
2. Drive pulley bolt

3. Remove the drive pulley from engine.
   3.1 Make sure the clutches holder is properly installed.
   3.2 Screw the pDrive puller in place of the drive pulley bolt.
   3.3 Tighten the pDrive puller until pulley is disengaged from the crankshaft end.

NOTICE **These pulleys have metric threads. Do not use a puller with ANS (American National Standard) or IS (International Standard) type threads. Always tighten puller by hand to ensure that the drive pulley has the same type of threads (metric vs ANS or IS) prior to fully tightening.**

Disassembling the Drive Pulley

REQUIRED TOOLS	
PDRIVE PULLER (P/N 529 036 370)	
DRIVE PULLEY SUPPORT (P/N 529 036 371)	
PULLEY SPRING COMPRESSOR TOOL (P/N 529 036 373)	

REQUIRED TOOLS	
CIRCLIP INSTALLER/REMOVER (P/N 529 036 375)	
REMOVING AXLE TOOL (P/N 529 036 372)	
DRIVE PULLEY OPENING TOOL (P/N 529 036 378)	

Separating Fixed and Sliding Sheaves

To separate fixed sheave from sliding sheave, screw puller into fixed sheave shaft about 13 mm (1/2 in).

Raise drive pulley and hold it by the sliding sheave while knocking on puller head to disengage fixed sheave.

NOTICE **NEVER tap on spider.**

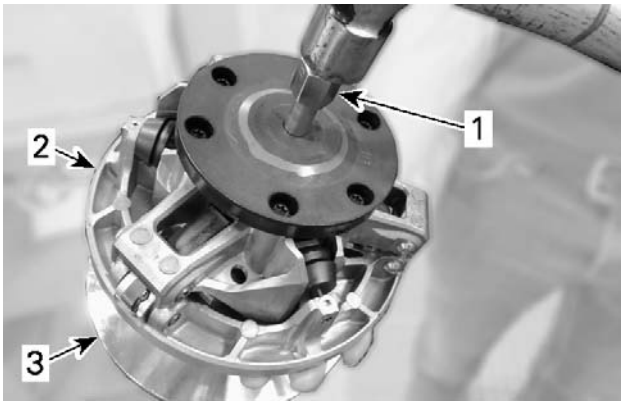

1. Puller screwed 13 mm (1/2 in) in fixed sheave
2. Sliding sheave
3. Fixed sheave

NOTE: No component marking is required before disassembly. This drive pulley features factory apposed index marks as references.

NOTICE **Never use any type of torch to heat spider.**

Removing the Damper

1. Secure the drive pulley support in a vice.
2. Install the drive pulley on the support.

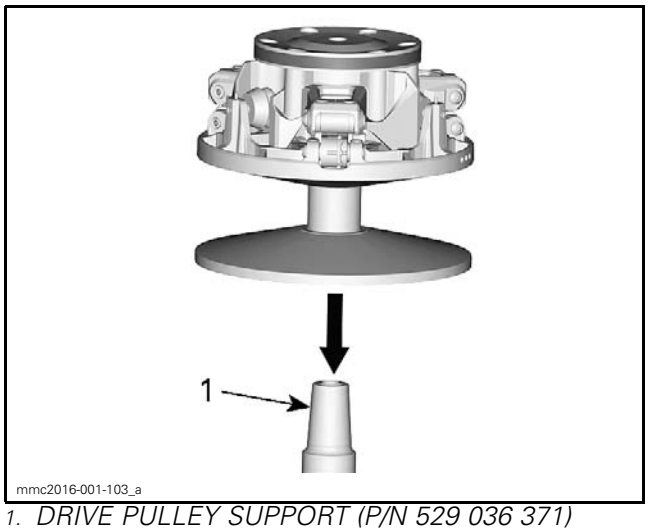

1. DRIVE PULLEY SUPPORT (P/N 529 036 371)

3. Loosen the damper screws.
4. Separate fixed and sliding sheaves. Refer to procedure above.
5. Remove the damper.

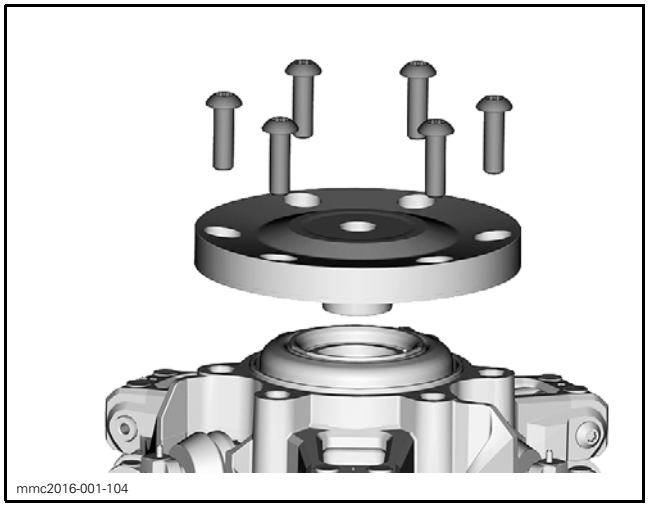

Removing the Spring

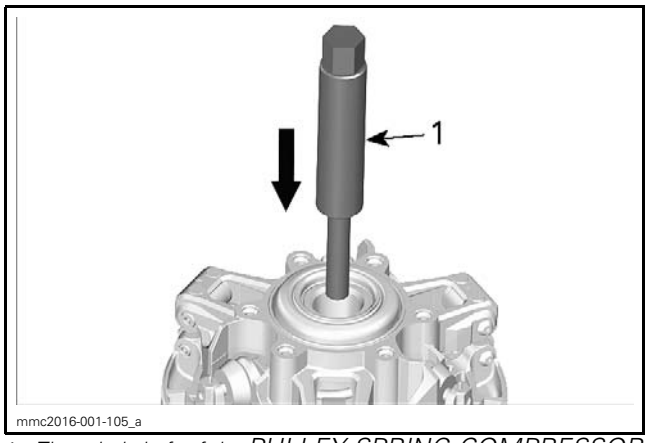

1. Threaded shaft of the PULLEY SPRING COMPRESSOR TOOL (P/N 529 036 373)

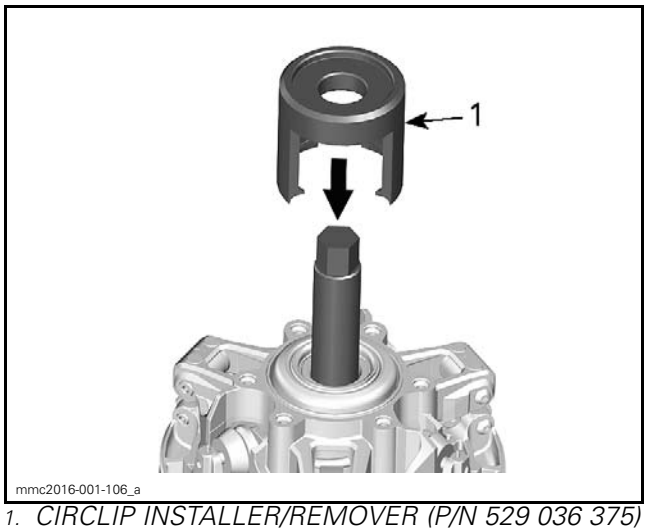

1. CIRCLIP INSTALLER/REMOVER (P/N 529 036 375)

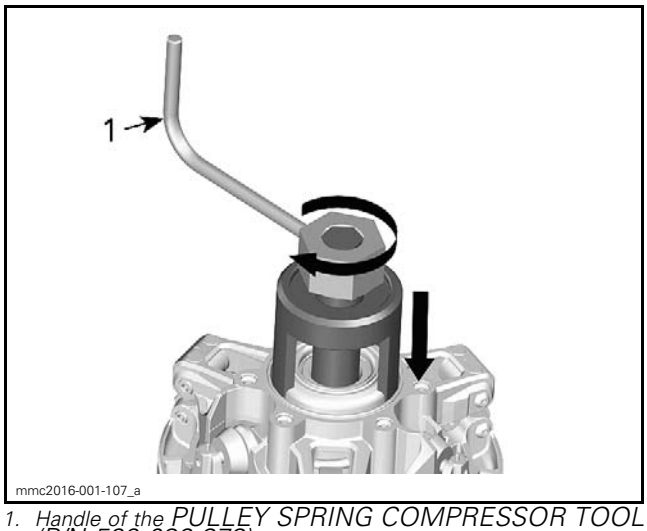

1. Handle of the PULLEY SPRING COMPRESSOR TOOL (P/N 529 036 373)

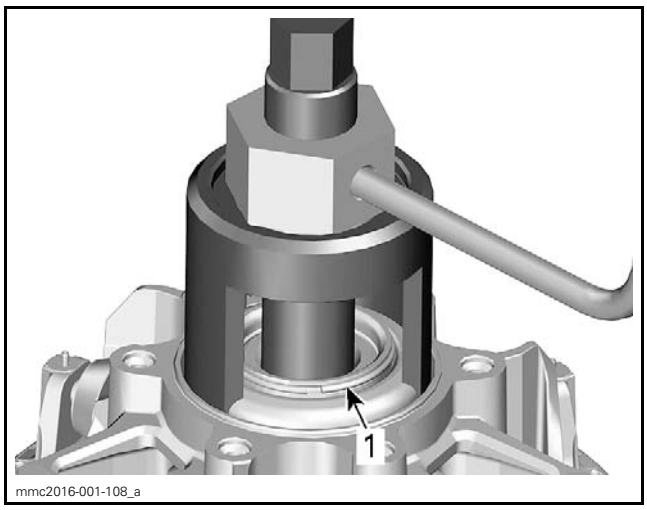

1. Remove the circlip

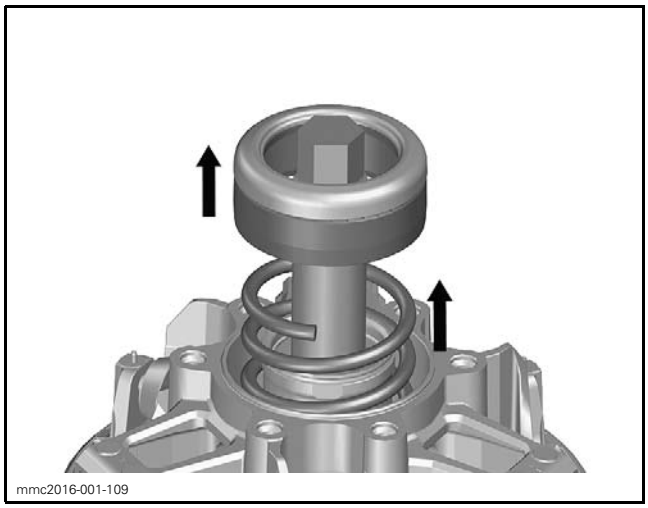
mmc2016-001-109

Removing the Spider

1. Remove the threaded shaft.

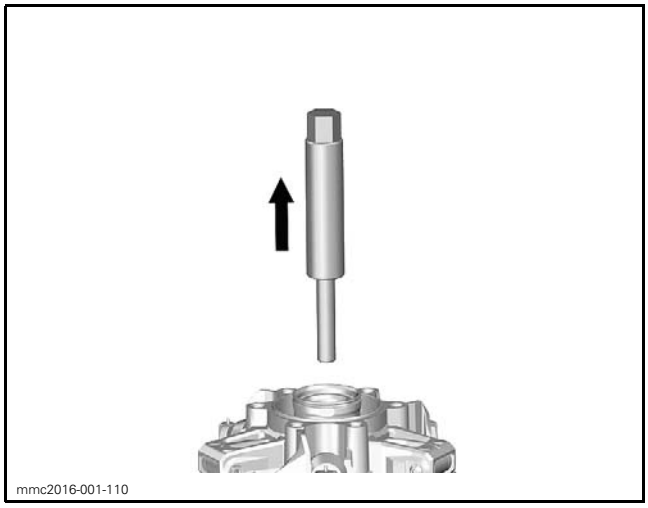
mmc2016-001-110

NOTICE Remove the threaded shaft to avoid damaging the bushings inside the spider.

2. Remove the spider.

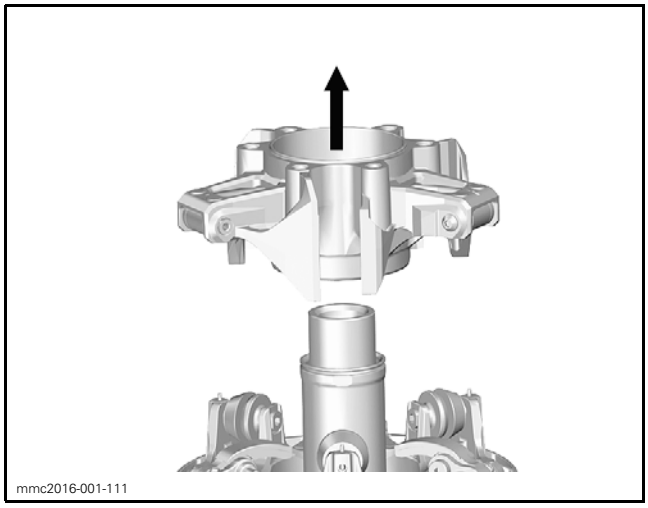
mmc2016-001-111

Removing the Roller

1. Remove axle retaining screw.

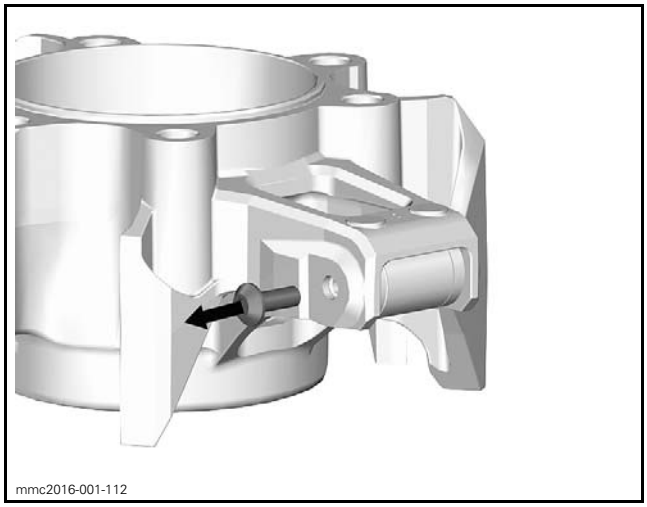
mmc2016-001-112

2. Remove the axle.

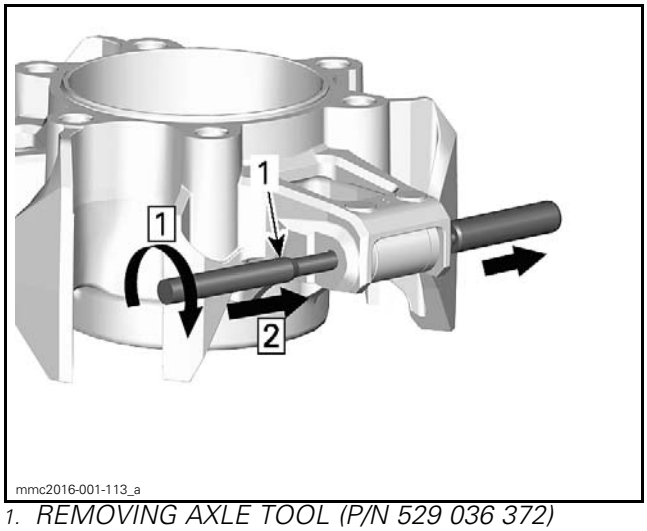

mmc2016-001-113_a

1. REMOVING AXLE TOOL (P/N 529 036 372)

Step 1: Screw the tool into the axle
Step 2: Push axle to the right side

3. Remove the roller and its thrust washers.

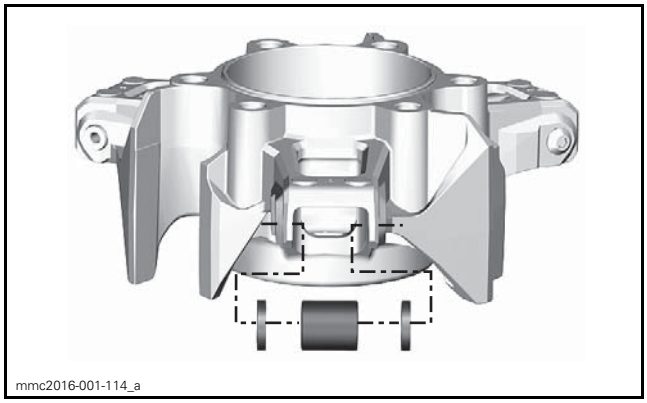
mmc2016-001-114_a

Removing the Ramp (without Spider)

1. Remove axle retaining screw.

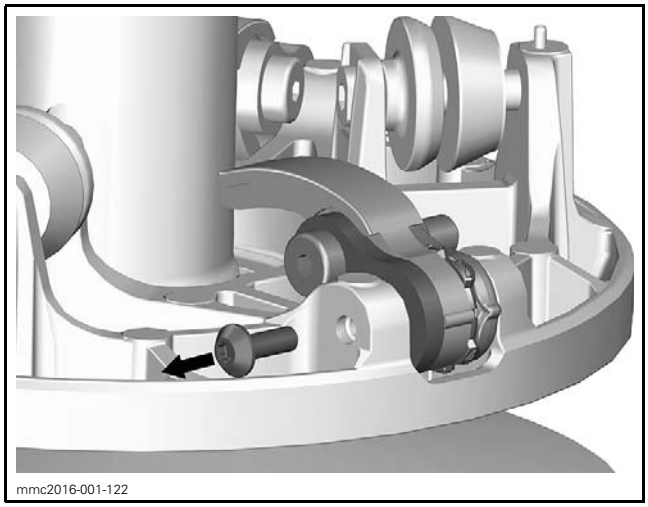

TYPICAL

2. Remove the axle.

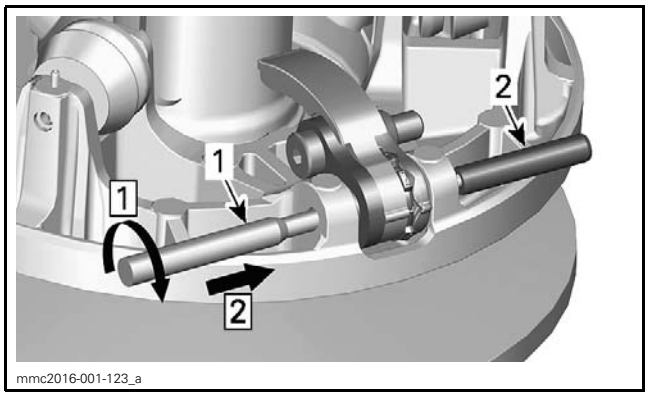

TYPICAL
1. REMOVING AXLE TOOL (P/N 529 036 372)
2. Axle

Step 1: Screw the tool into the axle
Step 2: Push axle to the right side

3. Remove ramp assembly.

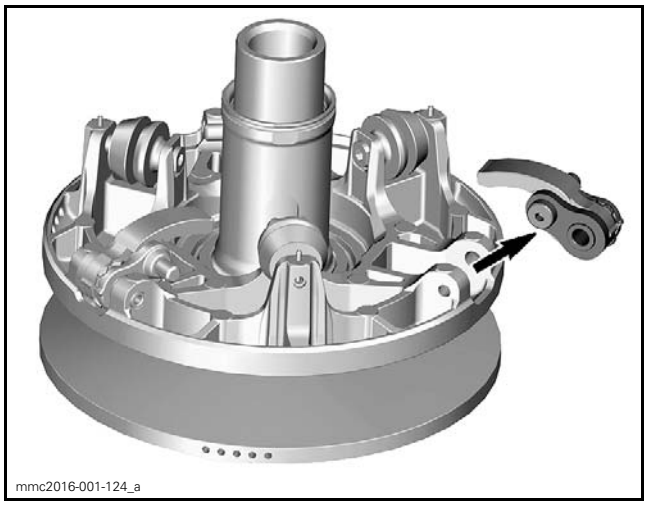

TYPICAL

Removing the Ramp (Spider Installed)

1. Lower the sliding sheave.
   1.1 Secure the drive pulley support in a vice.
   1.2 Install the drive pulley over the support.
   1.3 Install the drive pulley opening tool.

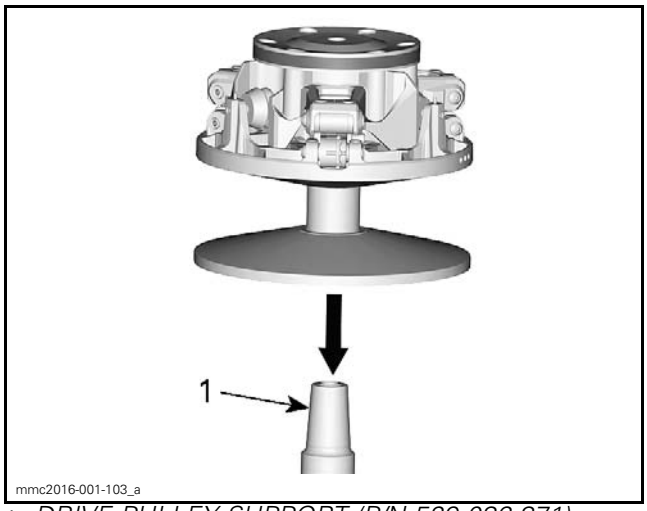

1. DRIVE PULLEY SUPPORT (P/N 529 036 371)

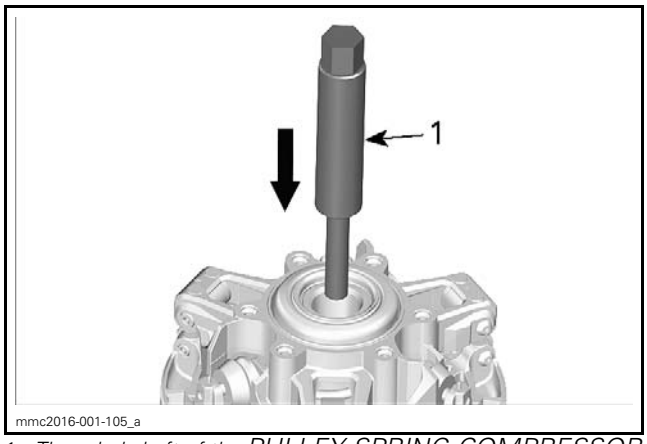

1. Threaded shaft of the PULLEY SPRING COMPRESSOR TOOL (P/N 529 036 373)

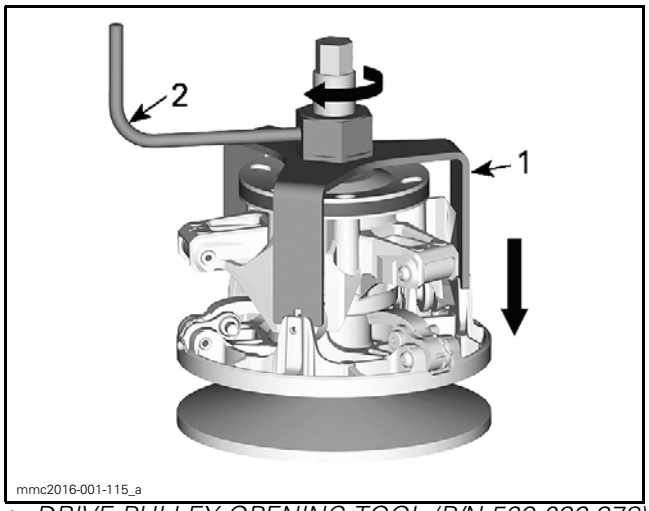

1. DRIVE PULLEY OPENING TOOL (P/N 529 036 378)
2. Handle of the PULLEY SPRING COMPRESSOR TOOL (P/N 529 036 373)

2. Remove axle retaining screw.

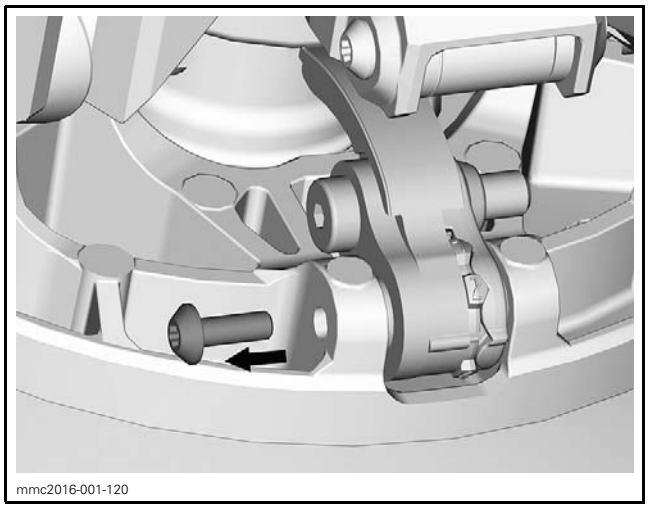

3. Remove the axle.

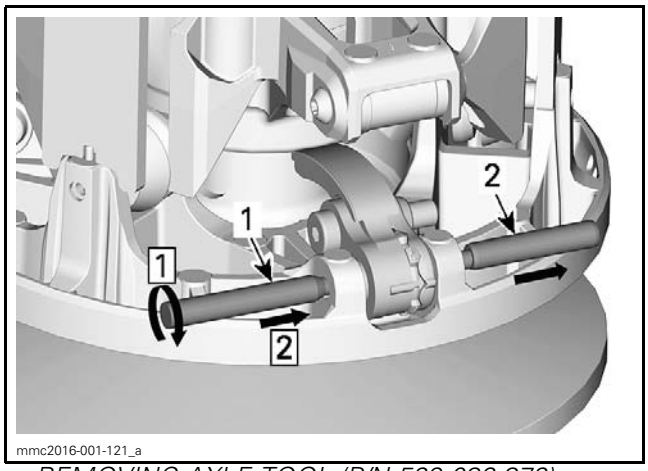

1. REMOVING AXLE TOOL (P/N 529 036 372)
2. Axle

Step 1: Screw the tool into the axle
Step 2: Push axle to the right side

4. Remove ramp assembly.

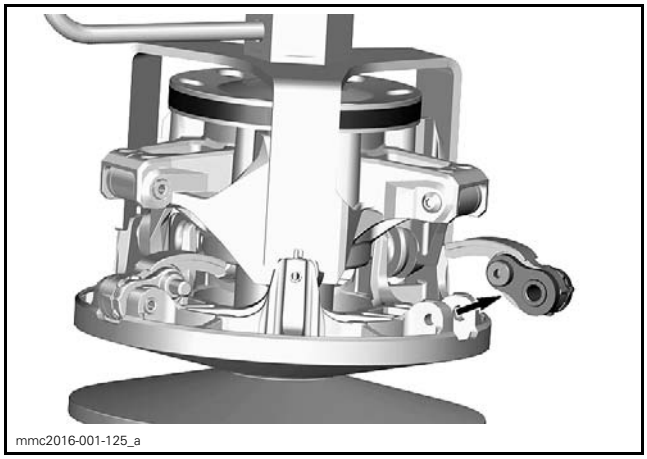

TYPICAL

Removing the Torque Rollers

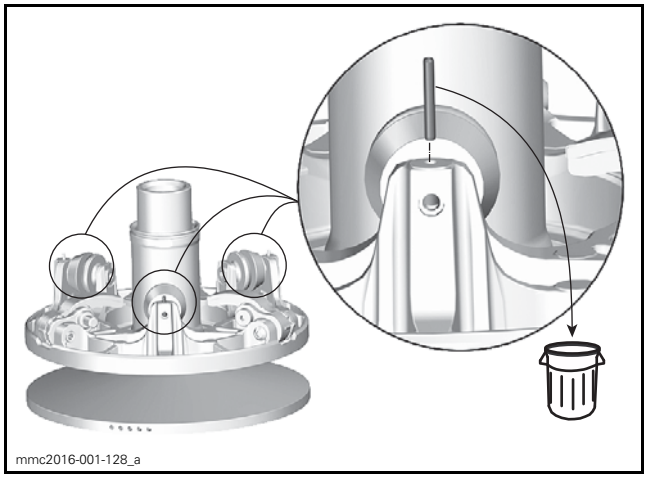

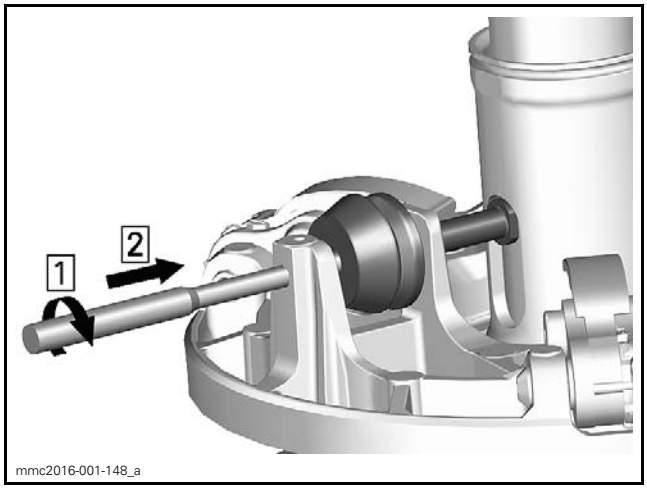

Step 1: Screw the tool into the axle
Step 2: Push axle towards the center of the pulley

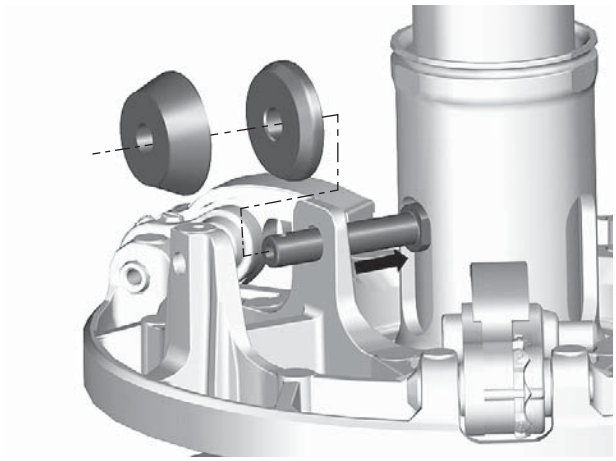
mmc2016-001-129_a

Replacing the Sliding Sheave Bushing

In case of worn out bushing, it is advisable to replace whole sliding sheave assembly as replacing just the bushing may reduce drive pulley performance.

Cleaning the Drive Pulley

NOTE: Parts must be at room temperature before cleaning.

Clean pulley sheaves and shaft with fine steel wool and dry cloth.

SERVICE PRODUCT
CLUTCH AND PULLEY FLANGE CLEANER PRO S1 (P/N 779244) + paper towel

Clean the following components.
- Crankshaft tapered end
- Taper inside fixed sheave of drive pulley
- Crankshaft threads
- Retaining screw threads.

NOTICE **Avoid contact between cleaner and crankshaft seal because damage may occur.**

Remove all hardened oil deposits that are baked on crankshaft and pulley tapered surfaces with coarse or medium steel wool and/or sand paper no. 600.

NOTICE **Do not use any other type of abrasive.**

Reclean mounting surfaces with paper towel and cleaning solvent.

Wipe off the mounting surfaces with a clean, dry paper towel.

NOTICE **Mounting surfaces must be free of any oil, cleaner or towel residue.**

Assembling the Drive Pulley

Torque Rollers

Position torque rollers as illustrated.

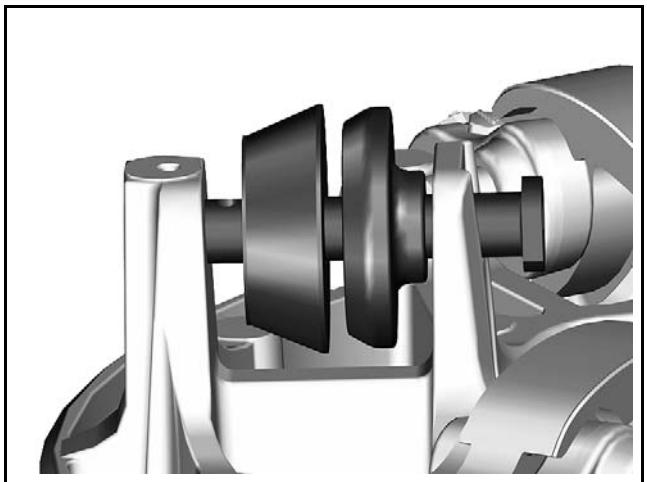
mmc2016-001-139

Position the flat sides of the axle head inside the slot of the mounting lug.

Install a new spring pin.

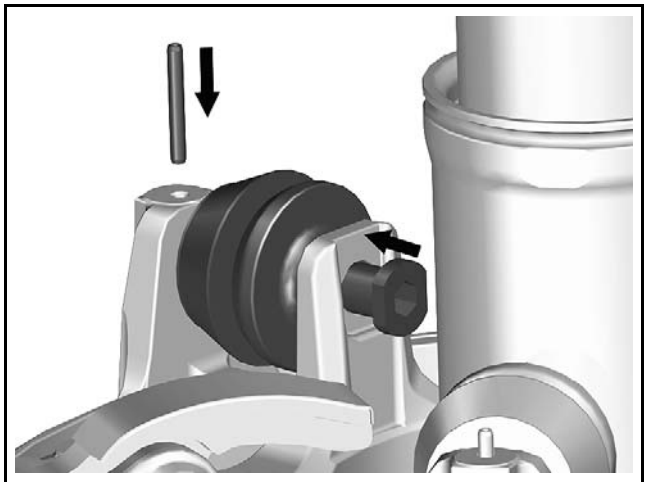
mmc2016-001-140

Ramp

Assemble the ramp as illustrated. Do not torque the pivot yet.

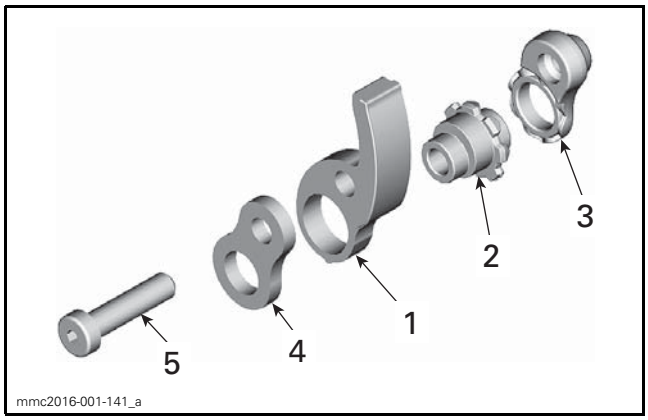

1. *Ramp*
2. *Cam*
3. *Right lever*
4. *Left lever*
5. *Pivot*

Install the ramp assembly on the sliding sheave.

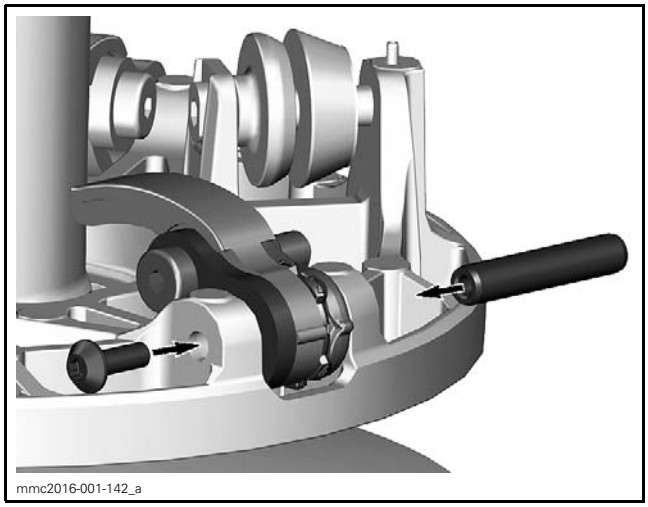

TIGHTENING TORQUE	
Axle screw	5 N•m ± 0.5 N•m (44 lbf•**in** ± 4 lbf•**in**)

Position the cam to the desired position.

For factory setting, refer to *SPECIFICATIONS (VEHICLE)*.

NOTICE Make sure all cams are set at the same number.

TIGHTENING TORQUE	
Pivot	8 N•m ± 1 N•m (71 lbf•**in** ± 9 lbf•**in**)

Roller

Lubricate the roller bearing.

SERVICE PRODUCT
ISOFLEX GREASE TOPAS NB 52 (P/N 293 550 021)

REQUIRED TOOL	
GREASE INJECTOR (P/N 529 036 376)	

NOTE: A threaded end is required on the grease gun for using the grease injector.

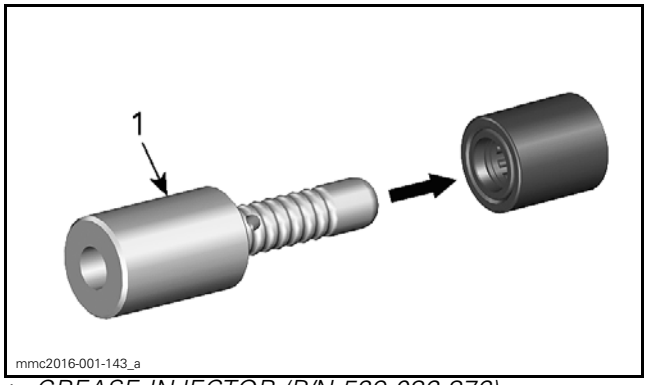

1. *GREASE INJECTOR (P/N 529 036 376)*

Install roller.

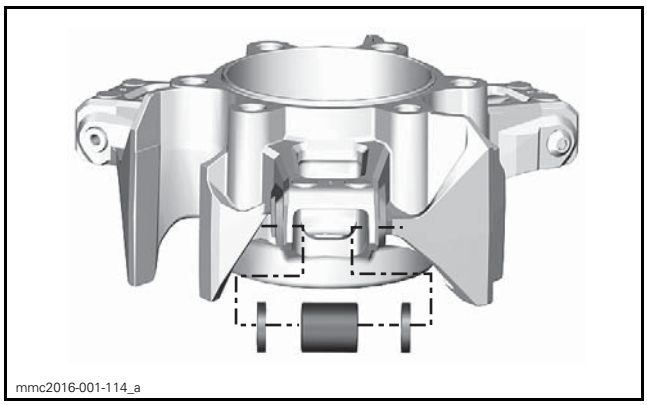

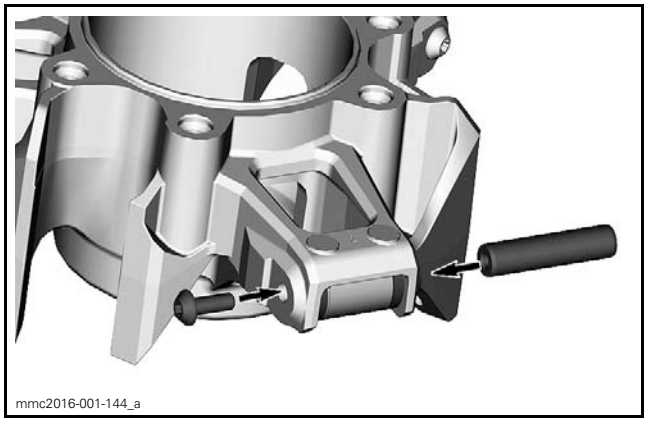

TIGHTENING TORQUE	
Roller axle screw	5 N•m ± 0.5 N•m (44 lbf•**in** ± 4 lbf•**in**)

Spider

Install the spider on the sliding sheave by aligning the indexing marks.

– Spider - the arrow on the arms #1, just above the roller.
– Sliding sheave - the dot on the external side of the sheave.

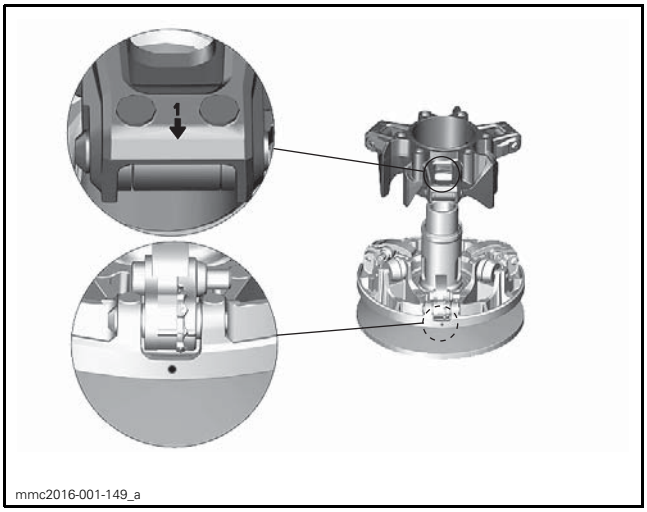

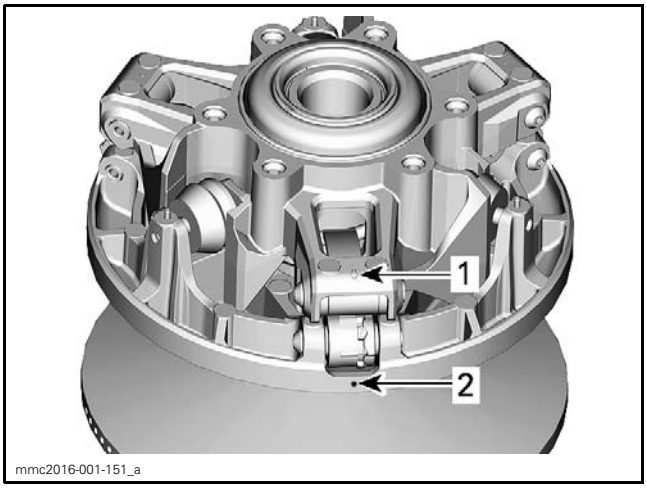

FINAL POSITION
1. *Arrow - spider arm*
2. *Dot - sliding sheave*

NOTICE During installation of the spider, make sure to position the three spurs of spider legs between torque rollers and ensure that ramps are positioned inside the openings of the spider.

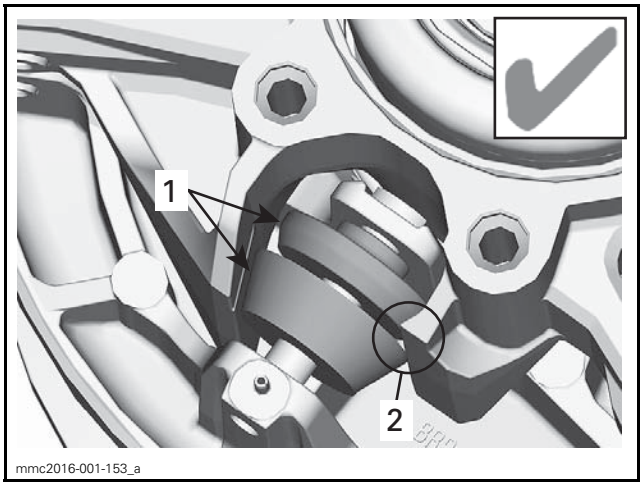

ROLLER - GOOD INSTALLATION
1. *Torque rollers*
2. *Spur of the spider leg*

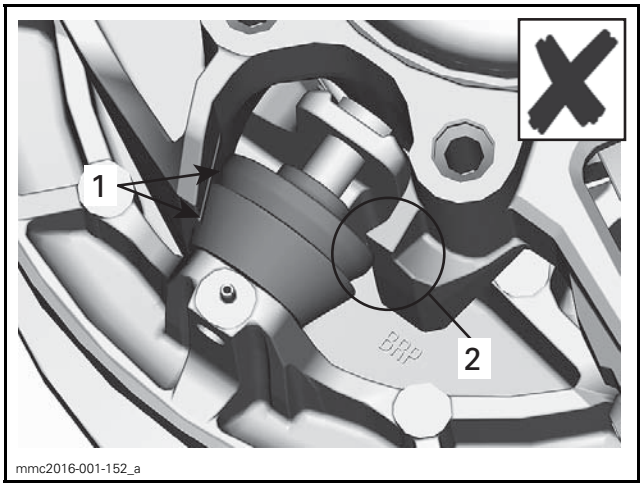

ROLLER - WRONG INSTALLATION
1. *Torque rollers*
2. *Spur of the spider leg*

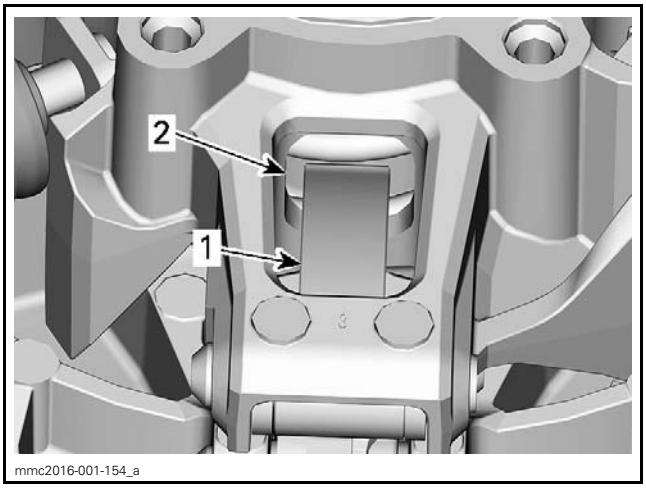

RAMP POSITIONING

Damper

Install the damper using the following sequence.

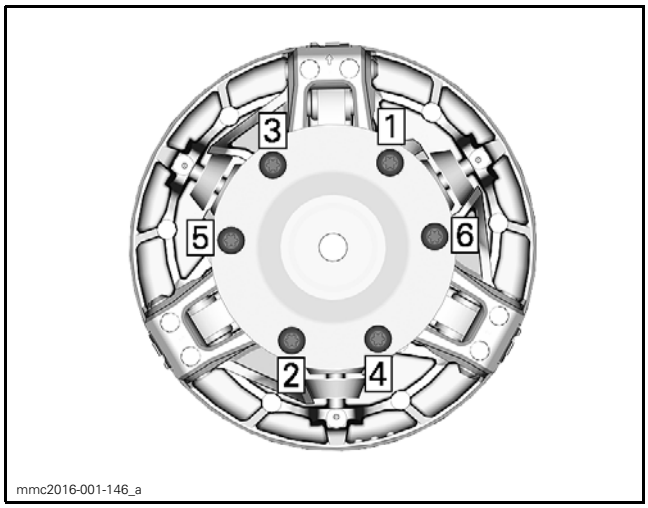

TIGHTENING TORQUE	
Damper screws	31.5 N•m ± 3.5 N•m (23 lbf•ft ± 3 lbf•ft)

Sliding Sheave and Fixed Sheave Assembly

Index sliding sheave with fixed sheave by aligning index marks.

– Sliding sheave - the arrow on the spider arms #1, just above the roller.
– Fixed sheave- the dot on the external side of the sheave.

Installing the Drive Pulley

REQUIRED TOOLS	
CLUTCH HOLDER (P/N 529 036 369)	

1. Clean mounting surfaces as described in *DRIVE PULLEY CLEANING* above.

NOTICE **Do not apply antiseize or any lubricant on crankshaft and drive pulley tapers.**

2. Install drive pulley on crankshaft end.

NOTE: The drive pulley can be installed in one position only. Drive pulley and crankshaft are indexed.

3. Install a NEW conical spring washer with its concave side towards drive pulley.
4. Install drive pulley bolt.

NOTICE **Always use BRP genuine parts for conical spring washer and bolt.**

5. Secure the drive pulley with the clutch holder.
6. Using a torque wrench, tighten the drive pulley bolt. Refer to *TIGHTENING THE DRIVE PULLEY* for the completed procedure.

Tightening the Drive Pulley

Tighten the drive pulley bolt.

TIGHTENING TORQUE		
Drive pulley bolt	First torque	120 N•m (89 lbf•ft)

Before starting engine, perform drive pulley adjustment. Refer to *ADJUSTMENT*, at the beginning of this subsection.

Install drive belt and guard.

Raise the rear of the vehicle and support it with a mechanical stand.

⚠ WARNING

Ensure that the track is free of particles which could be thrown out while track is rotating. Keep hands, tools, feet and clothing clear of track. Ensure nobody is standing near the vehicle.

Accelerate the vehicle at low speed (maximum 32 km/h (20 MPH) and apply the brake, repeat 5 times.

Tighten the drive pulley bolt again.

TIGHTENING TORQUE		
Drive pulley bolt	Final torque	120 N•m (89 lbf•ft)

⚠ WARNING

After 10 hours of operation the transmission system of the vehicle must be inspected to ensure drive pulley bolt is still properly torqued.

DRIVEN PULLEY AND COUNTERSHAFT

SERVICE TOOLS

Description	Part Number	Page
BEARING PULLER DRIVEN SUPPORT	529 036 485	209
COUNTERSHAFT ADAPTER	529 036 424	215
COUNTERSHAFT BEARING INSTALLER	529 036 066	216
COUNTERSHAFT BEARING REMOVER	529 036 065	215
COUNTERSHAFT SUPPORT	529 036 067	215
DRIVEN PULLEY SPRING COMPRESSOR	529 036 182	209
UPPER GEAR RETAINING TOOL	529 036 110	208

SERVICE PRODUCTS

Description	Part Number	Page
CLUTCH AND PULLEY FLANGE CLEANER PRO S1	779244	213, 216
LOCTITE 243 (BLUE)	293 800 060	213
LOCTITE 609	413 703 100	216
LOCTITE 648 (GREEN)	413 711 400	214
LOCTITE 7649 (F)	619 600 100	216
LOCTITE 7649 (PRIMER)	293 800 041	216
LOCTITE 767 (ANTI-SEIZE LUBRICANT)	293 800 070	215
PULLEY FLANGE CLEANER (F)	619 600 022	213, 216

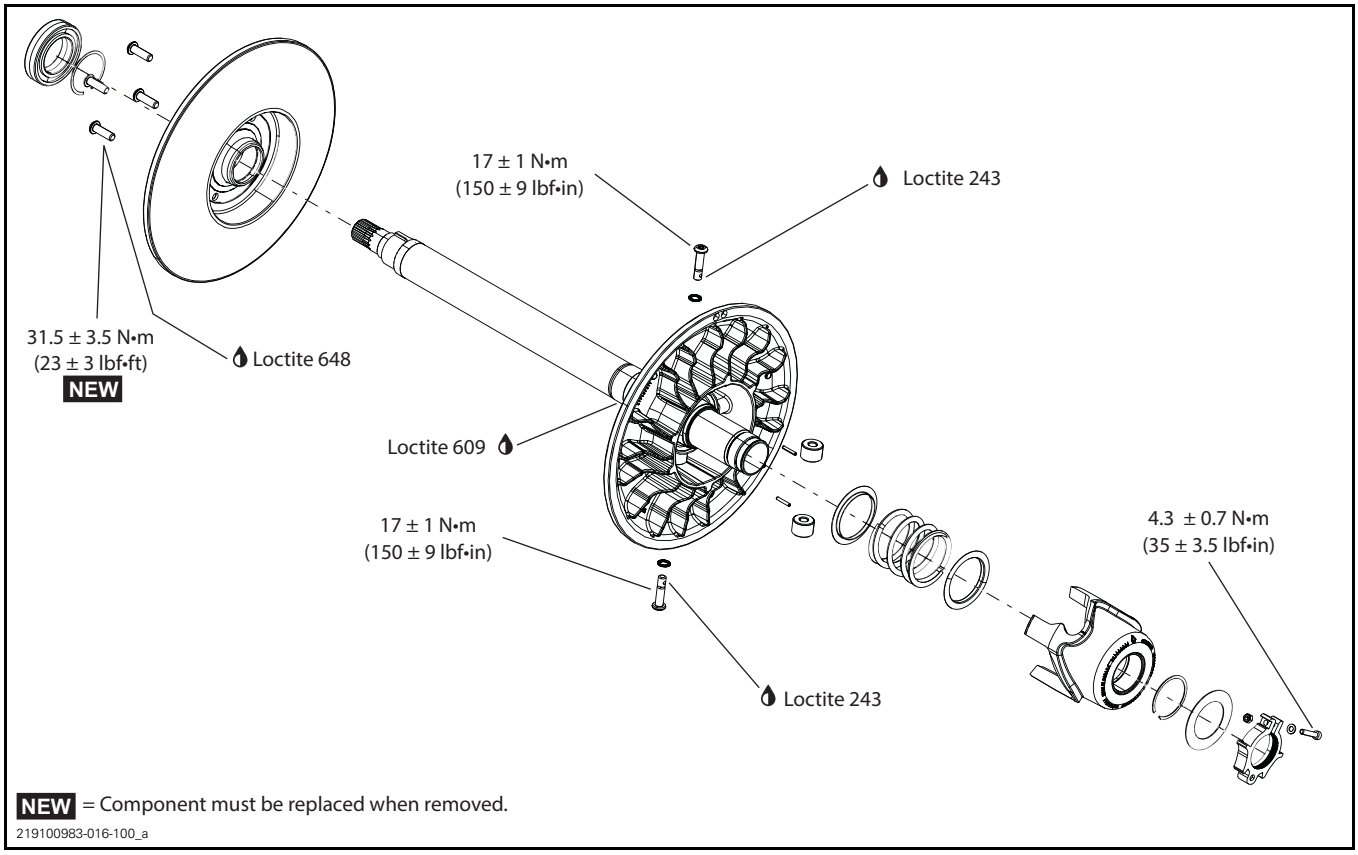

GENERAL

During assembly/installation, use the torque values and the service products as in the exploded views.

Clean threads before applying a threadlocker. Refer to *SELF-LOCKING FASTENERS* and *LOCTITE APPLICATION* at the beginning of this manual for complete procedure.

⚠ WARNING

Torque wrench tightening specifications must be strictly adhered to.
Locking devices (e.g.: locking tabs, elastic stop nuts, cotter pins, etc.) must be replaced with new ones.

⚠ WARNING

Never start engine when the pulley guard is removed.

PROCEDURES

DRIVEN PULLEY

Removing the Driven Pulley

NOTE: The driven pulley is removed with the countershaft.

1. Remove the muffler. Refer to *EXHAUST SYSTEM* subsection.
2. Remove the filling plug on the chaincase cover.

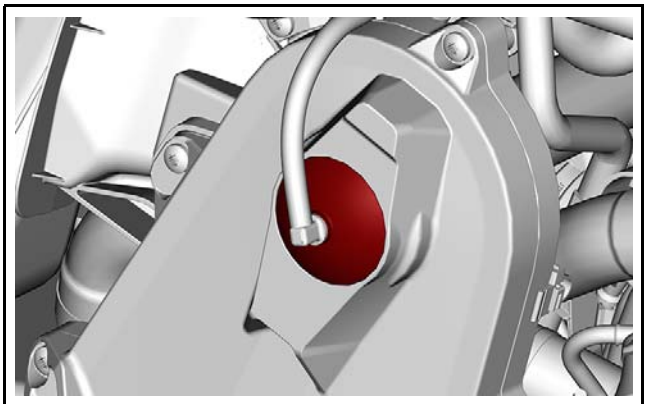

mmr2017-041-001

3. Release drive chain tension by unscrewing tensioner adjustment screw.

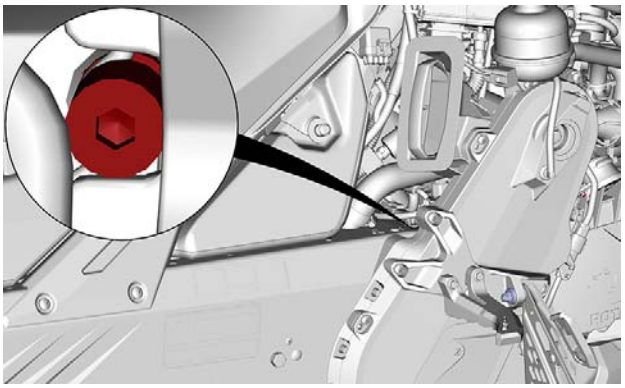

mmr2017-041-002

4. Remove the upper gear screw and the conical spring washer.

NOTE: Slightly tilt the bolt to avoid dropping washer inside chaincase.

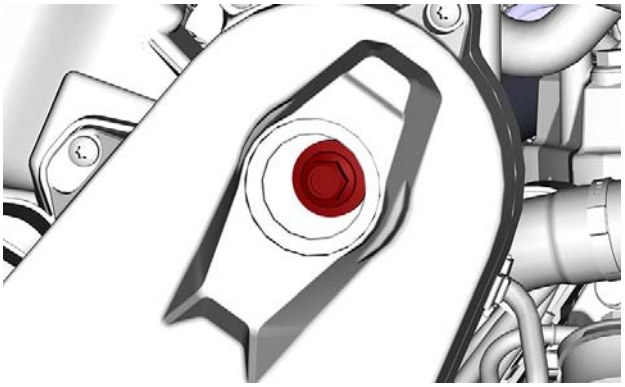

mmr2017-041-003

5. Install the gear retaining tool on countershaft end.

REQUIRED TOOL	
UPPER GEAR RETAINING TOOL (P/N 529 036 110)	

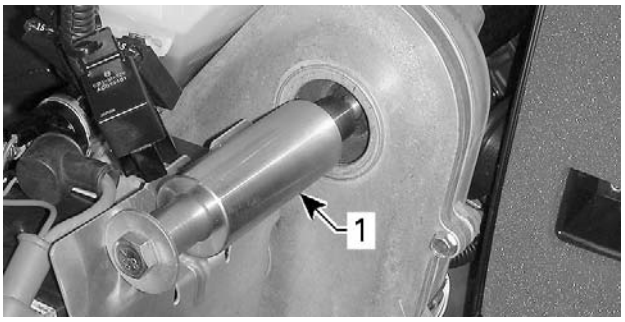

mmr2008-042-104_a

TYPICAL
1. Upper gear retaining tool

6. Remove the drive belt. Refer to *DRIVE BELT* subsection.

7. Behind driven pulley, remove nut securing the countershaft bearing flange.

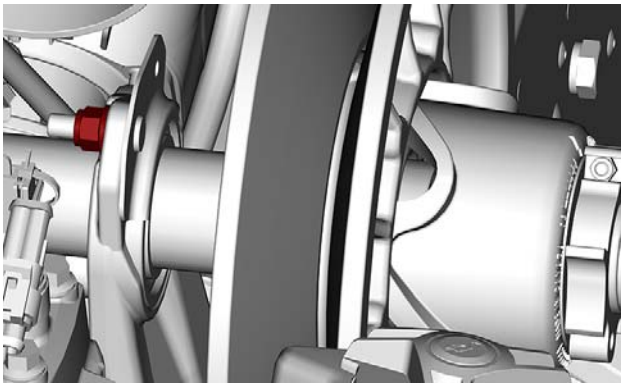

mmr2017-041-004

8. Pull out bearing flange.
9. Use the bearing puller to extract the bearing from the support.

REQUIRED TOOL	
BEARING PULLER DRIVEN SUPPORT (P/N 529 036 485)	

10. Pull the driven pulley to disengage countershaft and upper gear.

NOTE: If necessary, tap the upper gear retaining tool with a plastic hammer.

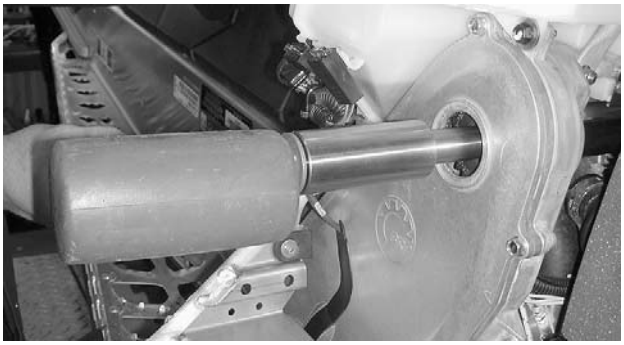

mmr2008-042-106

TYPICAL

11. Unscrew countershaft from the upper gear retaining tool. **Do not** remove tool.

NOTE: While countershaft is removed from vehicle, the upper gear retaining tool maintains the drive chain and the upper gear in position inside chaincase.

Driven Pulley Disassembly

Removing Cam and Spring

1. Loosen the clamping screw.

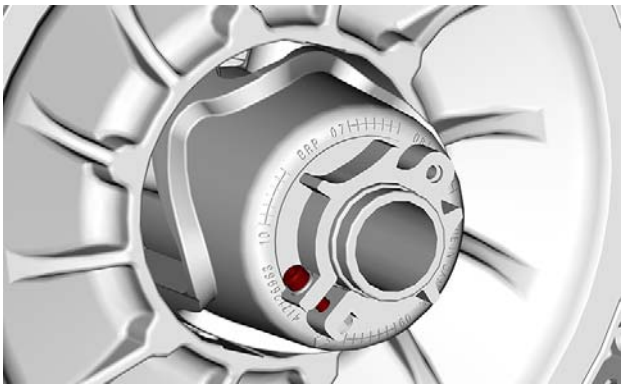

mmr2017-041-005

2. Unscrew the adjuster hub **clockwise** using the suspension adjustment tool provided in the vehicle tool kit.

NOTE: The adjuster hub has LH treads.

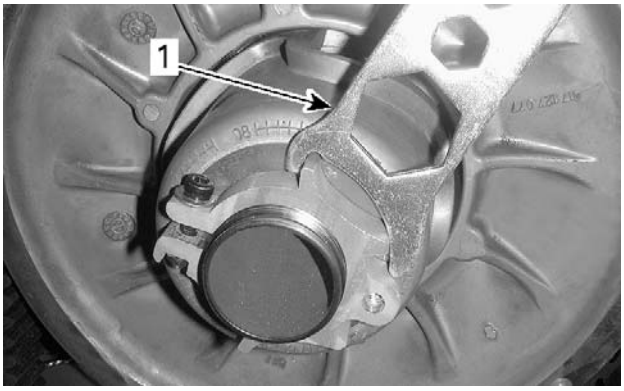

mmr2013-034-010_a

1. Suspension adjustment tool shown

REQUIRED TOOL	
DRIVEN PULLEY SPRING COMPRESSOR (P/N 529 036 182)	

3. Install the threaded adapter of the spring compressor on the countershaft.

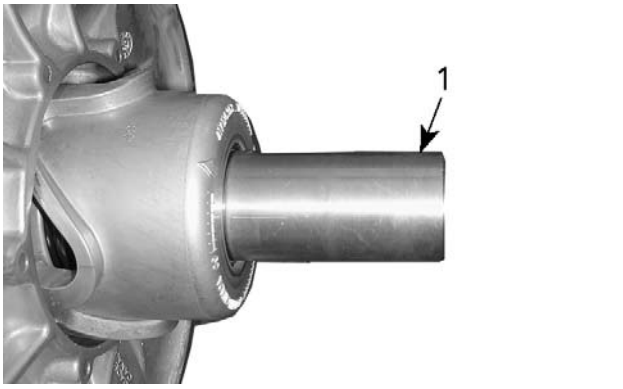

mmr2008-042-110_a

1. Threaded adapter

4. Install the external sleeve over the threaded adapter and secure sleeve with the tool screw.

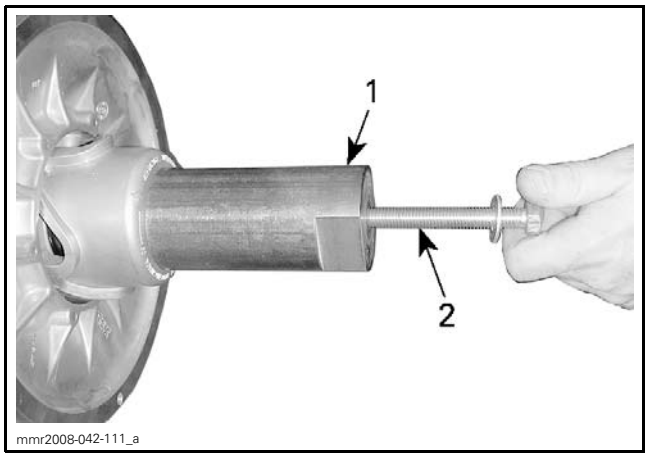

1. External sleeve
2. Driven pulley spring compressor screw

5. Tighten the tool screw to compress the cam.
6. Install the tool in a vice.

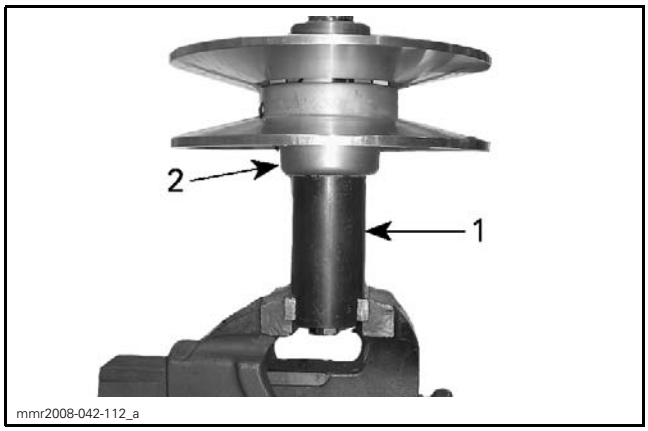

1. Driven pulley spring compressor
2. Driven pulley

7. Using a heat gun, heat cam screws to break the thread locker.

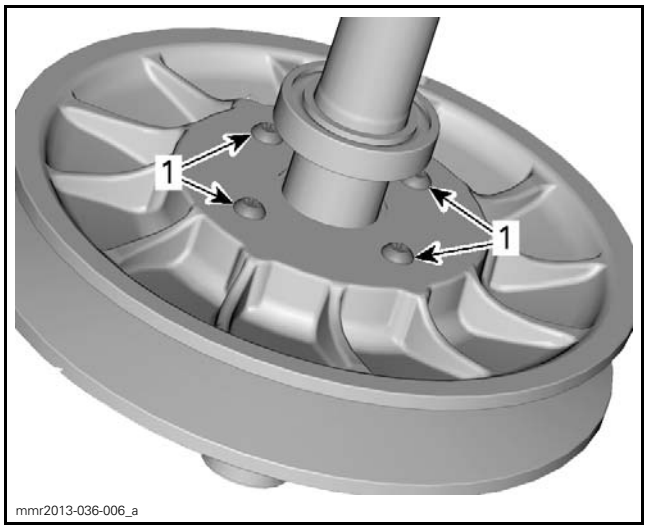

1. Heat cam screws

8. Remove and discard cam screws.
9. Unscrew the tool screw completely.
10. Remove cam, spring stoppers and spring.

Removing the Sliding Sheave

1. Remove the cam and spring. Refer to procedure in this subsection.
2. Remove the countershaft bearing. Refer to procedure in this subsection.
3. Remove sliding sheave.

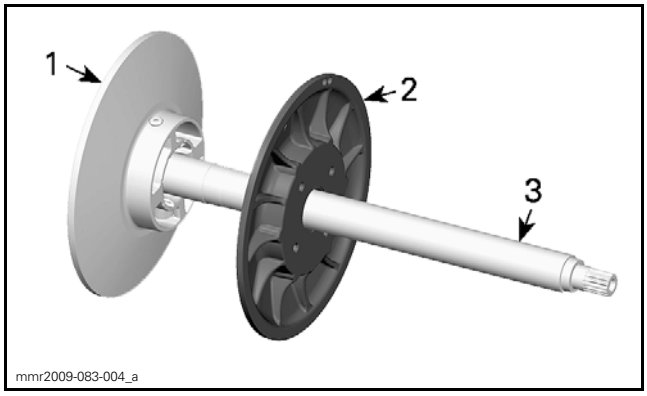

1. Fixed sheave
2. Sliding sheave
3. Countershaft

Removing the Fixed Sheave

The fixed sheave and countershaft are sold as an assembly. They are not available separately.

Removing the Driven Pulley Rollers

1. Move sliding and fixed sheaves apart.
2. Remove spring pins used to lock pivot screws.
   2.1 Use tap wrench to start removing spring pin.

2.2 Once spring pin is accessible to pliers, pull pin out using pliers.

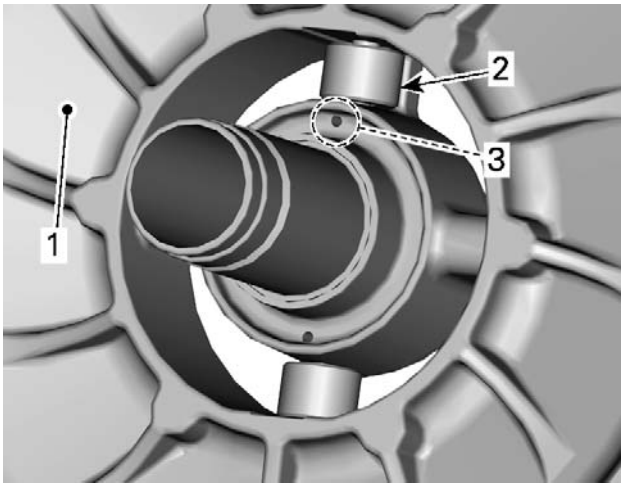

mmr2013-036-021_a

1. *Fixed sheave outer face*
2. *Roller*
3. *Spring pin location*

3. Identify pivot screws location before removal.
4. Remove pivot screw and ribbed lock washer; **keep both for reuse**.

NOTICE **Make sure not to damage or lose pivot screws. If screws need to be replaced, replace fixed sheave assembly.**

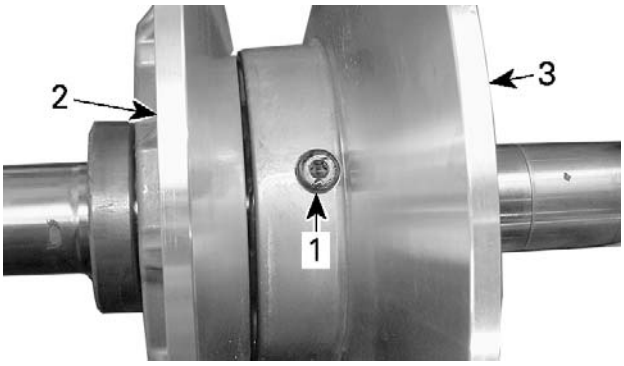

mmr2008-042-107_a

1. *Pivot screw*
2. *Sliding sheave*
3. *Fixed sheave*


mmr2012-043-003

PIVOT SCREW REMOVAL

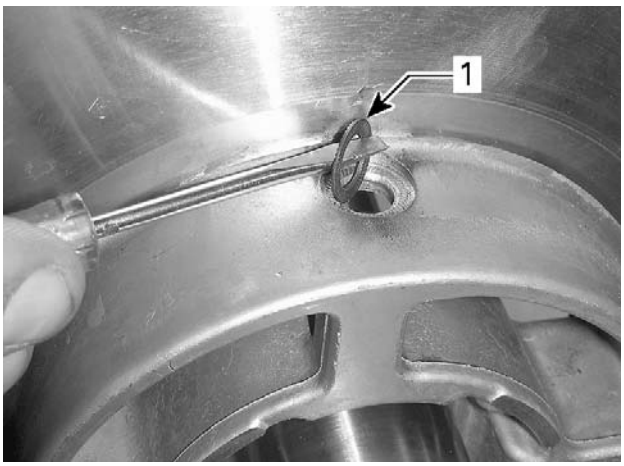

mmr2012-043-004_a

1. *Ribbed lock washer*

5. Remove roller.
6. Proceed with removal of other roller.

IMPORTANT: For proper fit, each pivot screw must be reinstalled where originally mounted in the fixed sheave.

Inspecting the Driven Pulley

Inspecting Cam and Spring

1. Verify contact surfaces of cam for visible damages. Ensure circlip properly locks the inner bushing. Replace part if necessary.
2. Using a dial bore gauge, measure the inner diameter of cam bushing. Measuring point must be at least 5 mm (1/4 in) from bushing edge.

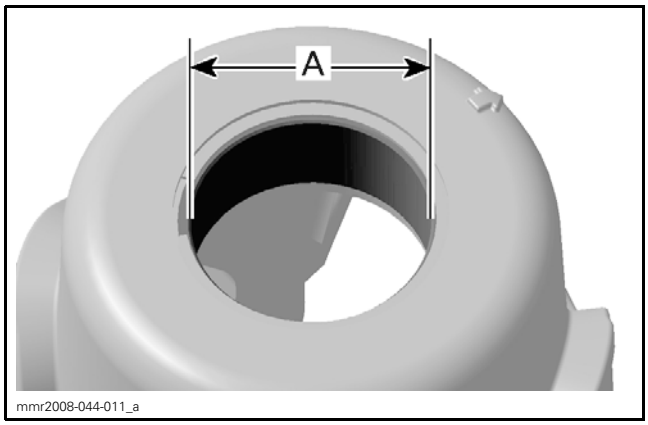

A. Inner diameter of cam bushing

CAM BUSHING	SERVICE LIMIT
Inner diameter	41.5 mm (1.634 in)

3. Replace the cam if the inner diameter of bushing is out of specification.

Inspecting the Sliding Sheave

1. Inspect pulley sheave for marks or scratches.
2. Ensure circlip properly locks the inner bushing. Replace part if necessary.
3. Using a dial bore gauge, measure the inner diameter of sliding sheave bushing. Measuring point must be at least 5 mm (1/4 in) from bushing edge.

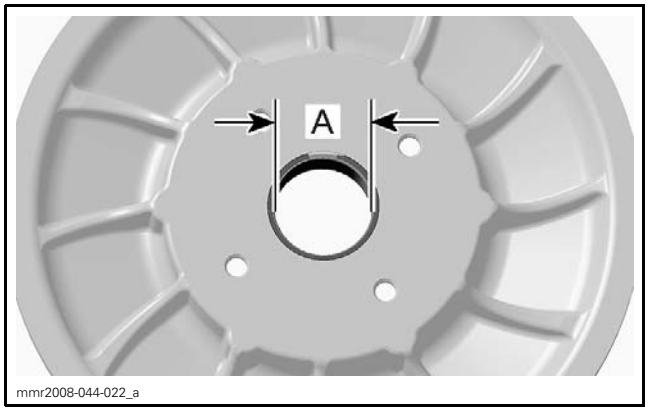

A. Inner diameter of sliding sheave bushing

SLIDING SHEAVE BUSHING	SERVICE LIMIT
Inner diameter	41.5 mm (1.634 in)

4. Replace the sliding sheave if the inner diameter of bushing is out of specification.

Inspecting the Fixed Sheave

Replace fixed sheave and countershaft if one of the following problem is detected:

– Marks or scratches on pulley sheave
– Bent, twisted or otherwise damaged countershaft
– Defective splines and threads at the end of countershaft.

Inspecting the Driven Pulley Roller

1. Check the rollers for flat spots, cracks or other visible damages. Replace if necessary (as a set).
2. Measure inner and outer diameter of rollers.

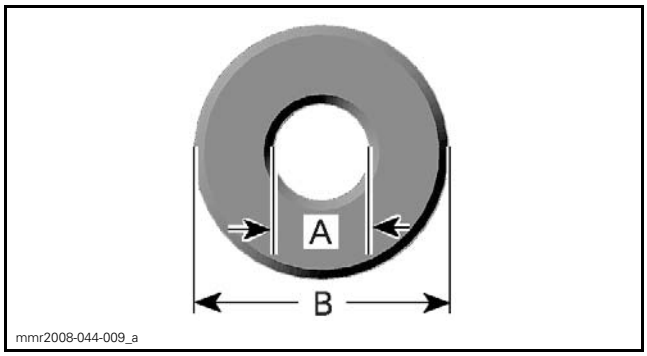

A. Inner diameter
B. Outer diameter

DRIVEN PULLEY ROLLER	SERVICE LIMIT
Inner diameter	8.5 mm (.335 in)
Outer diameter	21.5 mm (.846 in)

3. Measure the roller thickness.

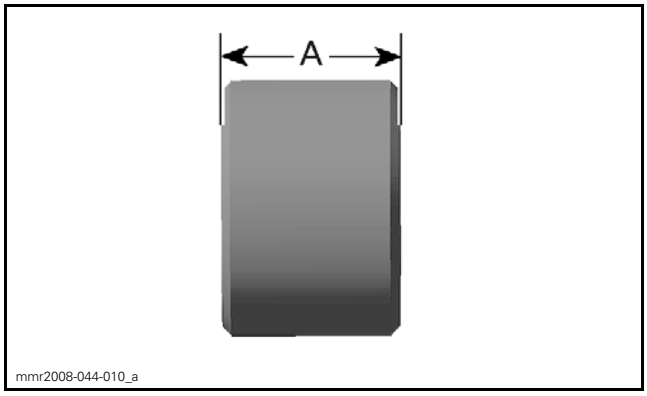

A. Thickness of roller

DRIVEN PULLEY ROLLER	SERVICE LIMIT
Thickness	14.75 mm (.581 in)

4. If a roller is out of specifications, replace both rollers at the same time.

Cleaning the Driven Pulley

Use the a clean rag to clean pulley sheaves.

SERVICE PRODUCT	
Scandinavia	PULLEY FLANGE CLEANER (F) (P/N 619 600 022)
Other Countries	CLUTCH AND PULLEY FLANGE CLEANER PRO S1 (P/N 779244)

Cleaning Cam and Spring

During break-in period, teflon from bushing moves to cam or countershaft surface. A teflon over teflon running condition occurs, leading to low friction. So it is normal to see gray teflon deposit on cam or countershaft. Do not remove this deposit.

When a dust deposit has to be removed from the cam or the countershaft, use dry cloth to avoid removing transferred teflon.

Driven Pulley Assembly

Installing the Driven Pulley Roller

NOTE: Exceptionally, do NOT clean threaded hole to avoid changing the screw position when torqued.

1. Using a hand wire brush, clean pivot screw threads.

IMPORTANT: Do not use a thread die to clean pivot screw of threadlocker as this may alter the screw threads.

NOTE: Pivot screw and ribbed lock washer must be reused if in good condition. If damaged, replace fixed sheave assembly.

2. Apply the following threadlocker to the pivot screw threads.

SERVICE PRODUCT	
Pivot screw threads	LOCTITE 243 (BLUE) (P/N 293 800 060)

3. Insert roller in fixed sheave, thread in pivot screw with ribbed lock washer.

NOTE: The ribbed locked washer must be installed with the concave side towards the fixed sheave.

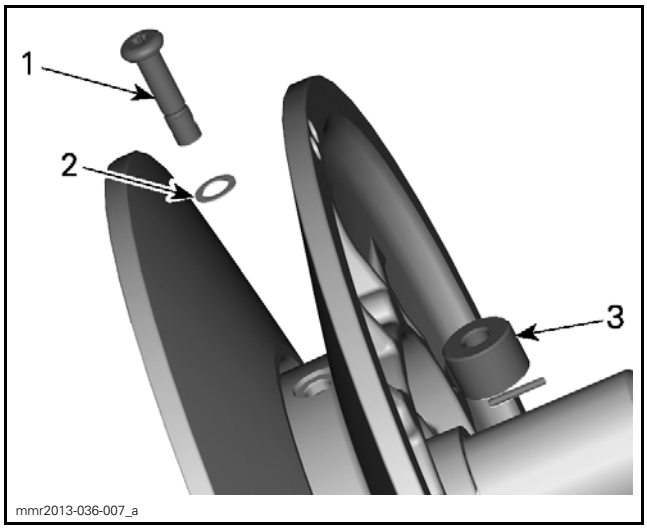

1. Pivot screw
2. Ribbed lock washer (concave side towards fixed sheave)
3. Roller

IMPORTANT: For proper fit, each pivot screw must be reinstalled where originally mounted in the fixed sheave.

4. Torque pivot screw as specified.

TIGHTENING TORQUE	
Pivot screws	17 N•m ± 1 N•m (150 lbf•**in** ± 9 lbf•**in**)

NOTE: Spring pin hole in the fixed sheave and pivot screw must perfectly line up when torque is applied.

NOTICE **If not properly aligned, spring pin will not insert in pivot screw hole and spring pin threads in fixed sheave will be damaged.**

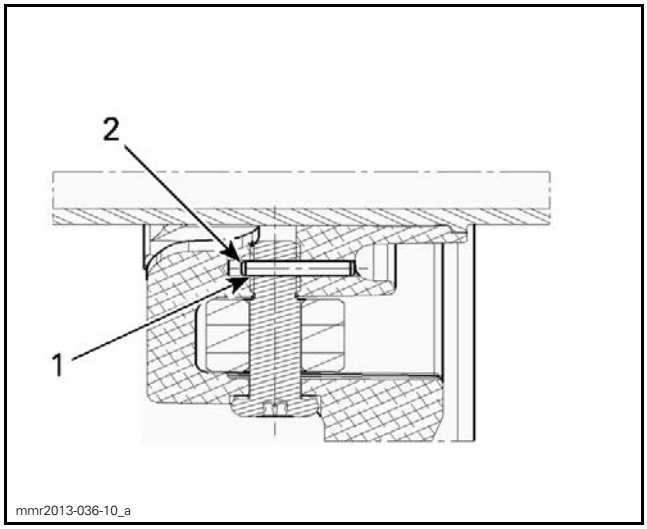

1. Hole in pivot screw
2. Spring pin

5. Install spring pin.

Installing Cam and Spring

1. Install a spring stopper, the spring, the other spring stopper and the cam.

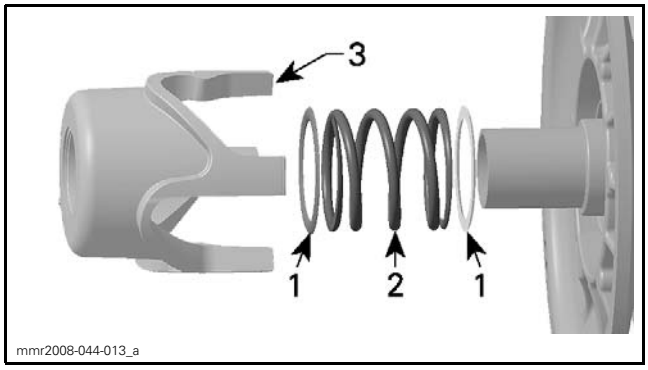

1. Spring stopper
2. Spring
3. Cam

2. Align the arrow on the cam with the arrow on the fixed sheave.

NOTE: On completion of cam installation, the arrow on the cam should have moved clockwise (approximately 30°).

3. Install the driven pulley spring compressor sleeve and tighten the tool screw until the cam is completely pressed against the sliding sheave.
4. Apply threadlocker on the thread of 4 new cam screws.

RECOMMENDED SERVICE PRODUCT
LOCTITE 648 (GREEN) (P/N 413 711 400)

5. From the back of the sliding sheave, install the 4 new cam screws.
6. Torque cam screws as specified.

TIGHTENING TORQUE	
Cam screw	31.5 N•m ± 3.5 N•m (23 lbf•ft ± 3 lbf•ft) + LOCTITE 648 (GREEN) (P/N 413 711 400)

7. Remove the tool.

Installing the Sliding Sheave

The assembly of sliding sheave is the reverse of the disassembly. However, pay attention to the following.

When installing sliding sheave, make sure to align its arrow with the arrow on cam.

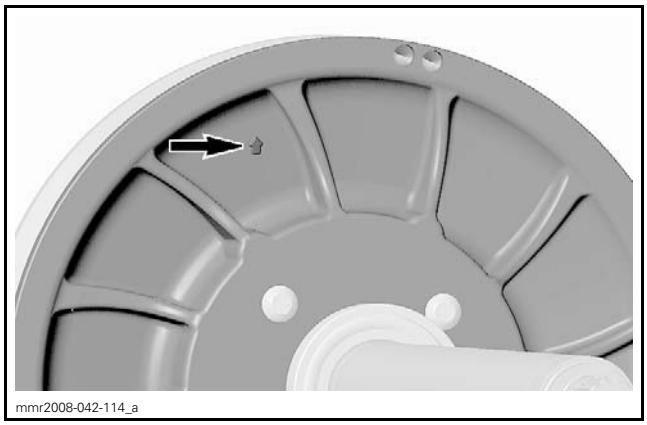

SLIDING SHEAVE ARROW

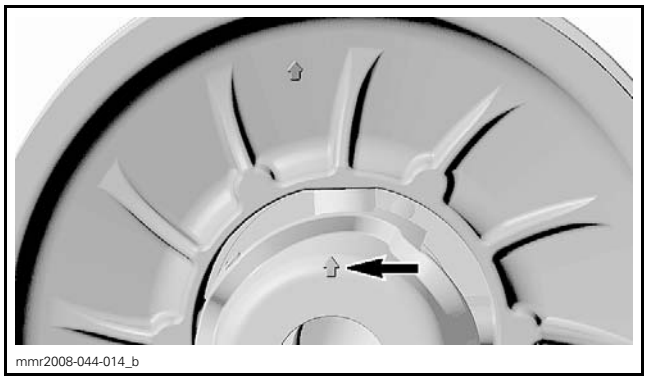

CAM ARROW

Installing the Driven Pulley

1. Using sand paper (600-grit or 1000-grit) or steel wool, remove any rust on bearing shoulder of countershaft bearing support.

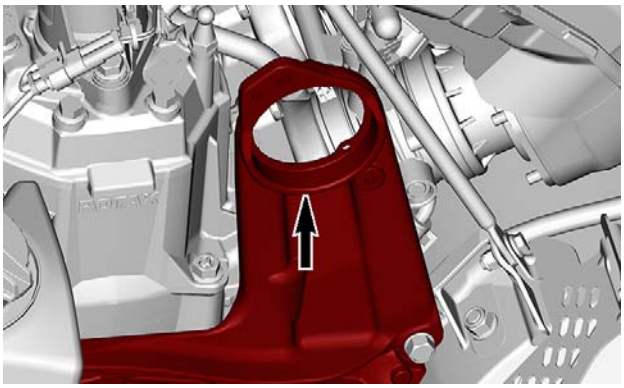

BEARING SUPPORT SHOULDER

2. Apply a thin layer of antiseize lubricant on bearing shoulder.

SERVICE PRODUCT
LOCTITE 767 (ANTI-SEIZE LUBRICANT) (P/N 293 800 070)

3. Insert countershaft through countershaft bearing support.
4. Fasten the end of countershaft to upper gear retaining tool.
5. Align countershaft splines with upper gear splines.
6. Using the upper gear retaining tool as a puller, Engage countershaft splines in upper gear splines. Ensure countershaft bearing is installed properly in countershaft bearing support.
7. Remove the upper gear retaining tool.
8. Install the upper gear screw and the conical spring washer.

NOTE: The conical spring washer must be installed with its concave side towards upper gear.

9. Torque upper gear screw.
10. Install chaincase filler plug.
11. On LH side, install the bearing flange. Torque nut as specified.

TIGHTENING TORQUE	
Bearing flange nut	15.5 N•m ± 1.5 N•m (137 lbf•**in** ± 13 lbf•**in**)

12. Install the adjuster hub onto the countershaft end and temporarily tighten.
13. Install and adjust drive belt. Refer to *DRIVE BELT* subsection.
14. Install all other removed parts.

COUNTERSHAFT

The countershaft and the fixed sheave are sold as an assembly. They are not available separately.

Removing and Installing the Countershaft

Refer to *DRIVEN PULLEY* in this subsection for the procedures.

COUNTERSHAFT BEARING

Removing the Countershaft Bearing

Remove the driven pulley. Refer to procedure in this subsection.

Install the bearing remover on countershaft.

REQUIRED TOOL	
COUNTERSHAFT BEARING REMOVER (P/N 529 036 065)	
COUNTERSHAFT ADAPTER (P/N 529 036 424)	

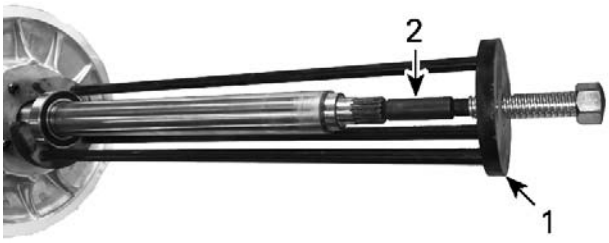

1. Countershaft adapter
2. Countershaft bearing remover

Tighten the screw at the end of tool to extract the bearing. Discard bearing.

Installing the Countershaft Bearing

1. Remove the adjuster hub from the cam.
2. Insert the countershaft support in the countershaft.

REQUIRED TOOL
COUNTERSHAFT SUPPORT (P/N 529 036 067)

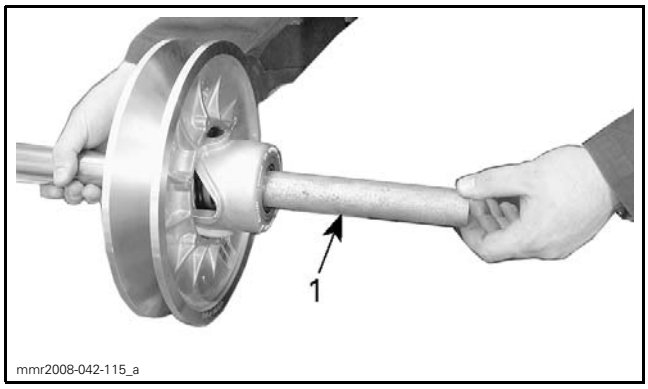

1. Countershaft support

NOTICE **The countershaft support is mandatory to avoid damaging the countershaft threaded end and the cam during bearing installation.**

3. Clean residues on countershaft bearing surface.

SERVICE PRODUCT	
Scandinavia	PULLEY FLANGE CLEANER (F) (P/N 619 600 022)
Other Countries	CLUTCH AND PULLEY FLANGE CLEANER PRO S1 (P/N 779244)

4. Check countershaft bearing surface for wear.
5. Apply Loctite 7649 on countershaft bearing surface and let dry 5 minutes.

SERVICE PRODUCT	
Scandinavia	LOCTITE 7649 (F) (P/N 619 600 100)
Other Countries	LOCTITE 7649 (PRIMER) (P/N 293 800 041)

6. Apply Loctite 609 on primer.

SERVICE PRODUCT
LOCTITE 609 (P/N 413 703 100)

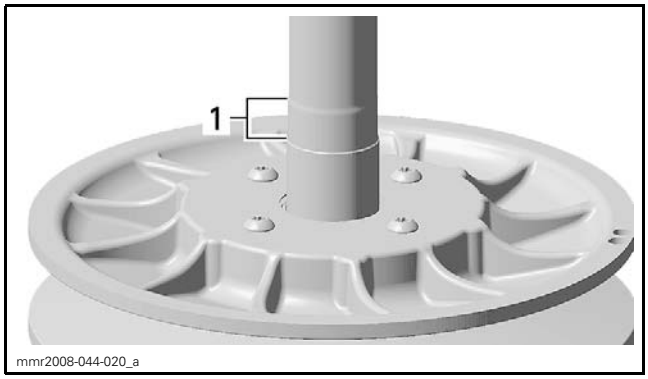

1. Apply Loctite 7649 (Primer) before Loctite 609 in this region

7. Using a press and the bearing installer, install the new bearing on countershaft.

REQUIRED TOOL
COUNTERSHAFT BEARING INSTALLER (P/N 529 036 066)

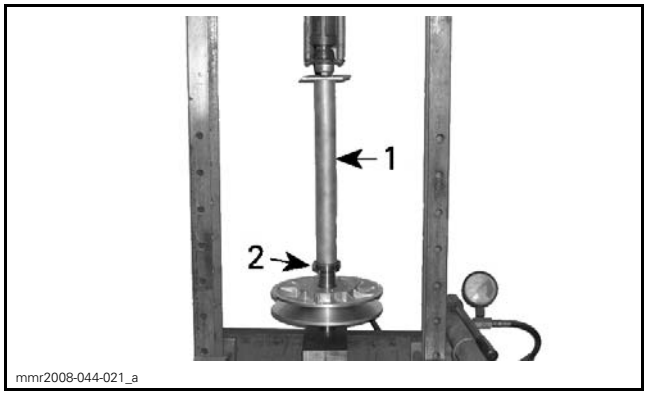

1. Countershaft bearing installer
2. New bearing

NOTICE **Use a press only, never tap on countershaft bearing installer with an hammer to avoid damaging bearing and countershaft.**

8. Clean the surplus Loctite with a rag to avoid having Loctite on sliding sheave bushing.

COUNTERSHAFT BEARING SUPPORT

For countershaft bearing support removal and installation, refer to *COUNTERSHAFT BEARING SUPPORT* in *FRAME*.

BRAKE

SERVICE TOOLS

Description	Part Number	Page
CALIPER PULLER	529 036 145	223
PROTECTIVE CAP	529 036 150	223

SERVICE PRODUCTS

Description	Part Number	Page
BRAKE FLUID DOT 4	779151	219
LOCTITE 767 (ANTI-SEIZE LUBRICANT)	293 800 070	224
SYNTHETIC GREASE	779162	221

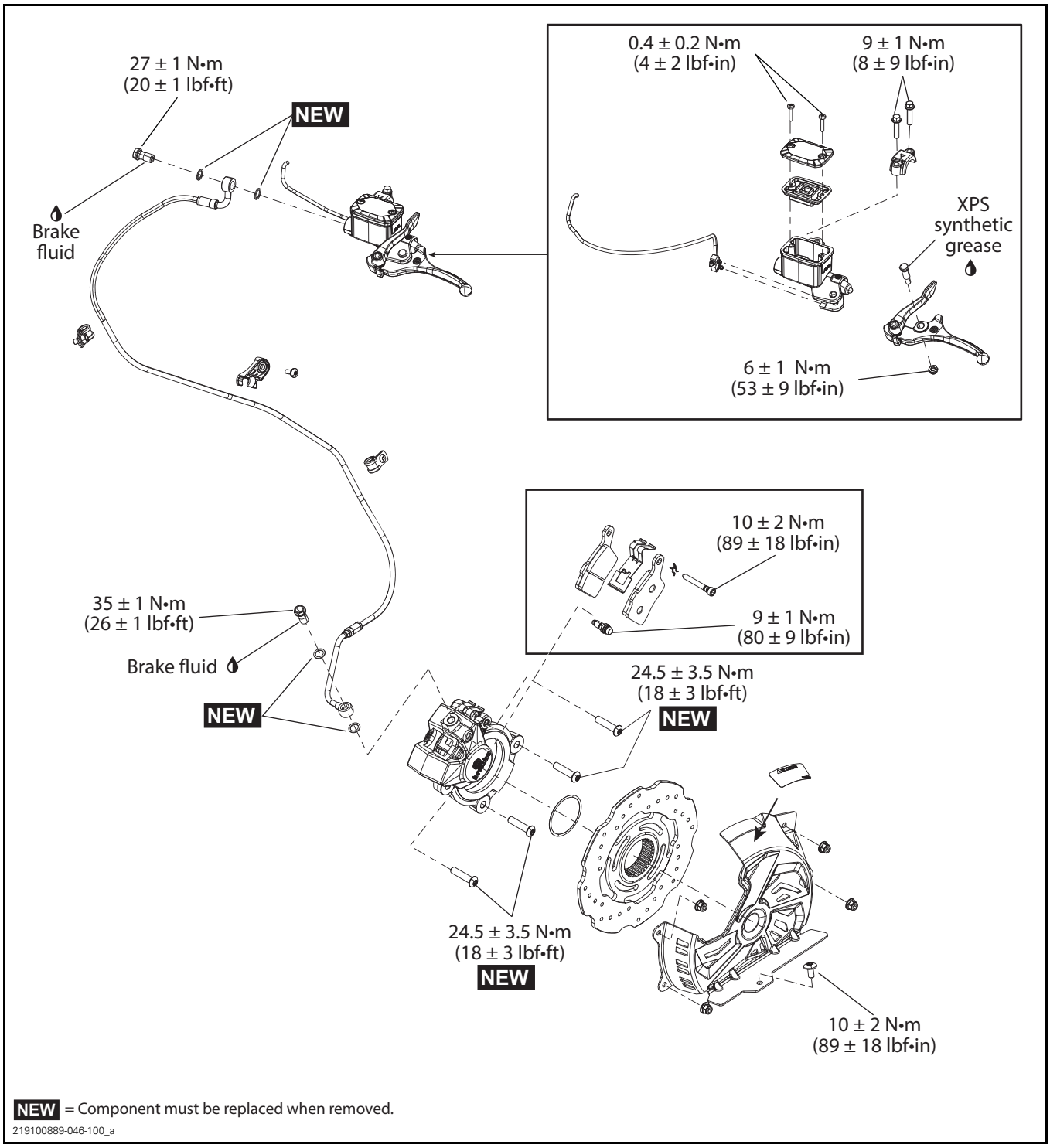
27 ± 1 N•m
(20 ± 1 lbf•ft)
NEW
Brake fluid
0.4 ± 0.2 N•m
(4 ± 2 lbf•in)
9 ± 1 N•m
(8 ± 9 lbf•in)
XPS synthetic grease
6 ± 1 N•m
(53 ± 9 lbf•in)
10 ± 2 N•m
(89 ± 18 lbf•in)
9 ± 1 N•m
(80 ± 9 lbf•in)
35 ± 1 N•m
(26 ± 1 lbf•ft)
Brake fluid
NEW
24.5 ± 3.5 N•m
(18 ± 3 lbf•ft)
NEW
24.5 ± 3.5 N•m
(18 ± 3 lbf•ft)
NEW
10 ± 2 N•m
(89 ± 18 lbf•in)
NEW = Component must be replaced when removed.
219100889-046-100_a

GENERAL

During assembly/installation, use torque values and service products as in the exploded view.

Clean threads before applying a threadlocker. Refer to *SELF-LOCKING FASTENERS* and *LOCTITE APPLICATION* at the beginning of this manual for complete procedure.

⚠ WARNING

Torque wrench tightening specifications must be strictly adhered to.
Locking devices must be replaced with new ones when removed (e.g.: locking tabs, elastic stop nuts, cotter pins, etc.).

Hoses or cables removed or disconnected must be installed and routed as per factory specifications.

NOTICE **Locking ties removed must be replaced as per factory specifications.**

⚠ WARNING

Never apply any product to brake fittings, The use of thread sealant or Teflon tape could cause brake system failure.

⚠ WARNING

A contaminated brake disc or pad reduces braking efficiency. Discard contaminated pads and clean contaminated disc with a high quality brake degreasing agent.

NOTICE **Avoid spilling brake fluid on plastic, rubber or painted parts. Protect these parts with a rag when servicing the brake system.**

NOTICE **Wipe up any brake fluid spillage.**

NOTICE **To avoid serious damage to the brake system, use only DOT 4 brake fluid from a sealed container. Do not use brake fluid taken from an old or already opened containers, or mix different fluids for topping up the system.**

NOTICE **Sealing washers must be discarded and replaced with NEW ones every time a Banjo fitting is unscrewed.**

Dispose of brake fluid as per your local environmental regulation.

MAINTENANCE

RECOMMENDED BRAKE FLUID

Always use brake fluid meeting the DOT 4 specification.

RECOMMENDED SERVICE PRODUCT
BRAKE FLUID DOT 4 (P/N 779151)

VERIFYING THE BRAKE FLUID LEVEL

With the vehicle on a level surface, position steering in the straight-ahead position to ensure reservoir is level.

Brake fluid must always be above the MIN. line when brake lever is squeezed.

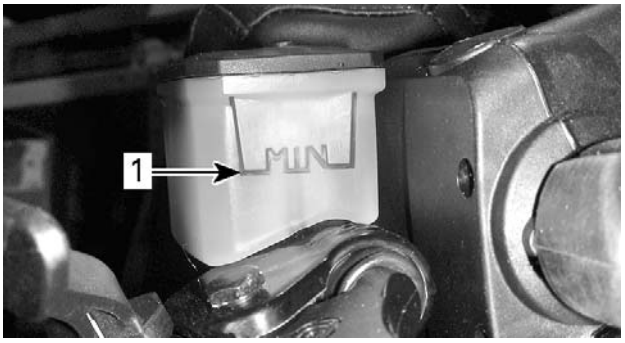

mmr2008-043-101_a

TYPICAL
1. MINIMUM line

Add fluid as required. Do not overfill.

NOTE: A low level may indicate leaks or worn brake pads.

REPLACING THE BRAKE FLUID

Draining the Brake Fluid

1. Place vehicle on a level surface.
2. Remove reservoir cover with its diaphragm.

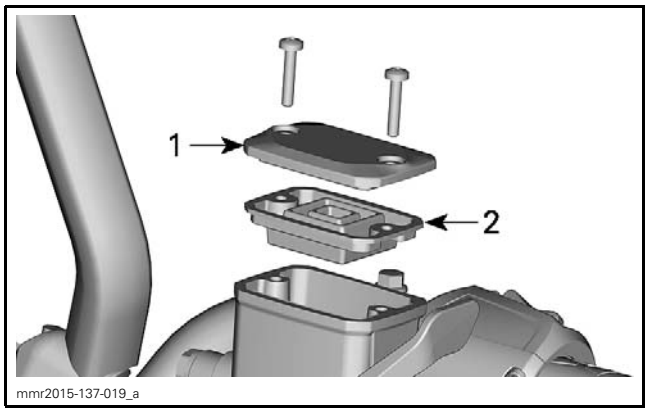

1. Reservoir cover
2. Diaphragm

3. Connect a clear hose to caliper bleeder.
4. Place the other end of hose in a container.
5. Loosen bleeder and pump brake lever until no more fluid flows out of bleeder.

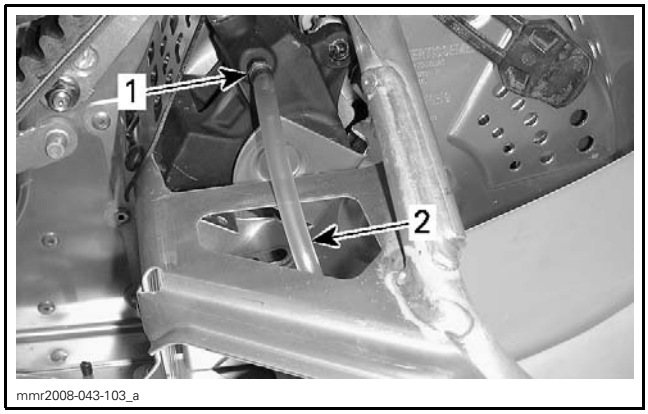

TYPICAL
1. Bleeder
2. Clear hose to catch used brake fluid

NOTE: To drain the fluid trapped in the caliper, push the pistons in.

Filling the Brake Fluid

To fill brake circuit when it is empty do the following:

1. Ensure reservoir cover is removed.
2. Using a large syringe and a suitable tube, push brake fluid slowly into the caliper.

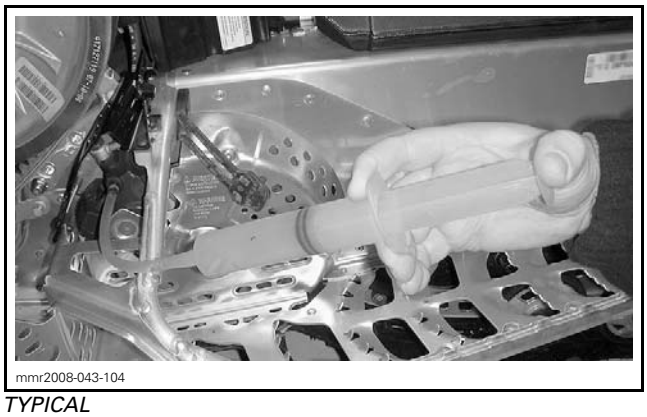

TYPICAL

3. Continue to push brake fluid until master cylinder reservoir is half full.
4. Close bleeder.
5. Fill up reservoir and install diaphragm and cover.
6. Squeeze brake lever.
   6.1 If brake lever is firm, the brake system does not require bleeding. Torque bleeder as specified.

TIGHTENING TORQUE	
Brake caliper bleeder	8.5 N•m ± 1.5 N•m (75 lbf•**in** ± 13 lbf•**in**)

   6.2 If brake lever is spongy, bleed brake system as per following procedure.

BLEEDING THE BRAKE SYSTEM

1. Install a clear hose on bleeder.
2. Place the other end in a container partially filled with clean brake fluid.
3. Remove reservoir cover and diaphragm.
4. Pump up circuit pressure with brake lever until lever resistance is felt.
5. Squeeze brake lever and open bleeder. When lever touches the handlebar, do not release lever and close bleeder.
6. Release brake lever slowly.
7. Repeat the procedure until no more air bubbles appear in hose.

NOTE: Check fluid level often to prevent air from being pumped into the circuit.

8. Install cover and diaphragm on reservoir.
9. Squeeze brake lever.
   9.1 If brake lever is firm, bleeding procedure is completed. Torque bleeder as specified.
   9.2 If brake lever is still spongy, repeat step 2 to step 6.

10. Torque bleeder as specified.

TIGHTENING TORQUE	
Brake caliper bleeder	8.5 N•m ± 1.5 N•m (75 lbf•**in** ± 13 lbf•**in**)

11. Refill reservoir.
12. Install diaphragm and cover on reservoir.

INSPECTING THE BRAKE HOSE, PADS AND DISC

Break-In Inspection

Visually inspect the brake hose for leaks or any damage.

Visually inspect pads and disc for abnormal wear or any damage.

Scheduled Maintenance and Preseason

Visually inspect the brake hose for leaks or any damage.

Refer to *BRAKE* subsection and carry out:

– *INSPECTING THE BRAKE PAD*
– *INSPECTING THE BRAKE DISC*.

LUBRICATING THE BRAKE LEVER PIVOT

1. Remove brake lever pivot.
2. Lubricate brake lever pivot using recommended product.

SERVICE PRODUCT
SYNTHETIC GREASE (P/N 779162)

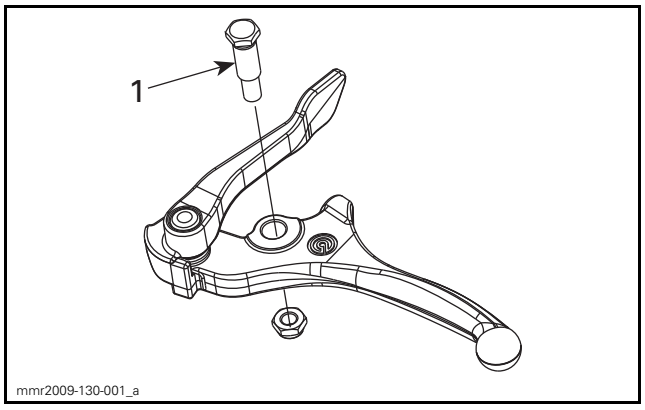

1. Lubricate this surface

3. Install brake lever pivot.
4. Torque pivot nut of brake lever as specified.

TIGHTENING TORQUE	
Brake lever pivot nut	6 N•m ± 1 N•m (53 lbf•**in** ± 9 lbf•**in**)

PROCEDURES

BRAKE PADS

Inspecting the Brake Pads

1. Measure brake pad lining thickness.

SERVICE LIMIT	
Brake pad thickness A	1 mm (1/32 in)

NOTICE **Brake pads must always be replaced in pairs.**

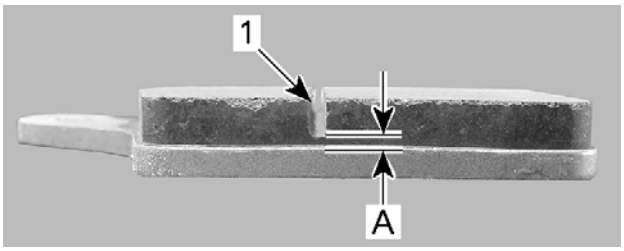

1. Groove on pad lining

2. Also inspect the brake disc, refer to *INSPECTING THE BRAKE DISC* in this subsection.

Replacing the Brake Pads

Removing the Brake Pads

1. Place the vehicle on a level surface.
2. Cover the plastic parts under and near master cylinder in the event that brake fluid would be spilled.
3. Remove reservoir cover with its diaphragm seal.

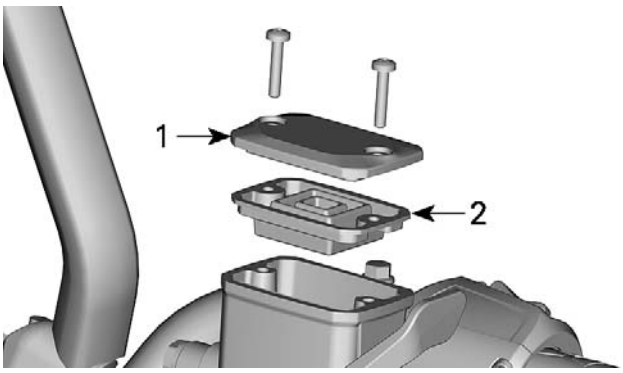

1. Reservoir cover
2. Diaphragm

4. Open the LH side panel.
5. Remove the LH toe hook (if equipped).

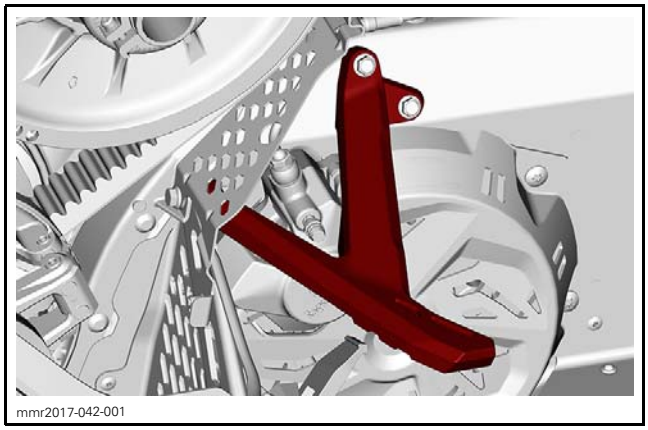
mmr2017-042-001

6. Remove the disc brake protective cover.

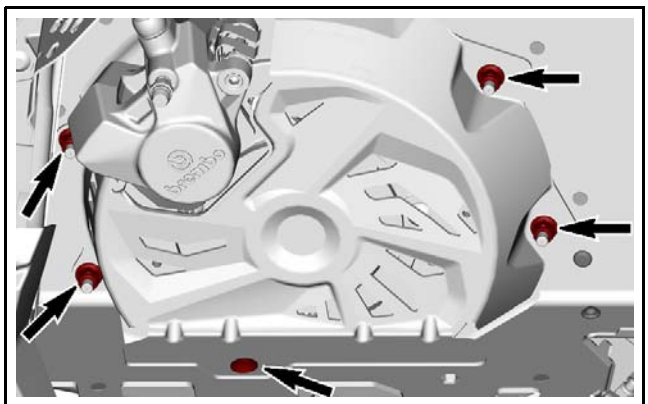
219100889-046-002_a

5 HOLES MOUNT

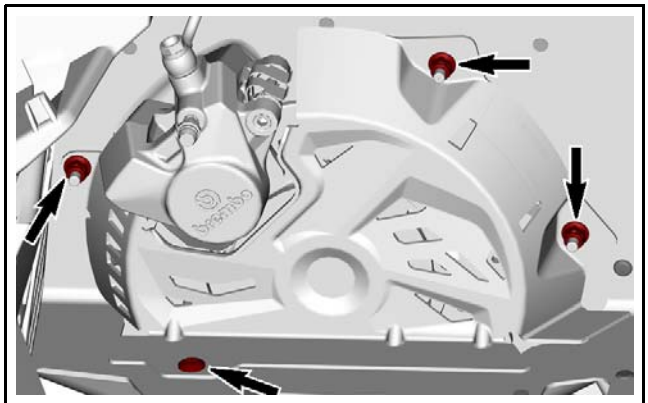
219100889-046-003_a

4 HOLES MOUNT

7. Remove the clip securing brake pad pin.
8. Unscrew and remove the brake pad pin.

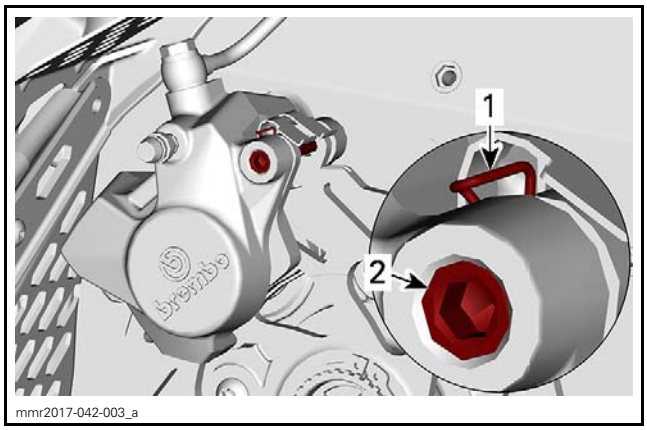

mmr2017-042-003_a

1. Clip
2. Brake pad pin

9. Using a flat screwdriver, depress caliper pistons into their bores. Pay attention for pistons to go back in straight. Insert screwdriver alternatively backwards and forwards and move pistons by small steps.

NOTICE **Pay attention to avoid scratching brake disc.**

10. Remove brake pads.
    10.1 Remove the external pad first.

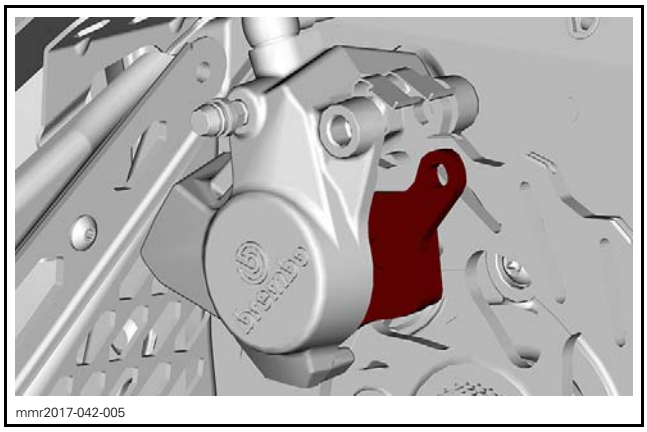
mmr2017-042-005

    10.2 Pull the brake disc outward and remove the internal pad.

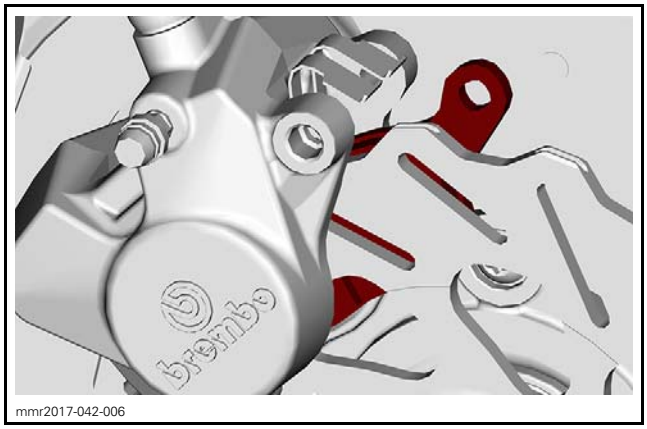
mmr2017-042-006

Installing the Brake Pads

The installation is the reverse of the removal. However, pay attention to the following.

1. Install new brake pads with tabs facing upward.
2. Install brake pad pin and tighten to specification.

TIGHTENING TORQUE	
Brake pad pin	10 N•m ± 2 N•m (89 lbf•**in** ± 18 lbf•**in**)

3. Install spring clip on brake pad pin. If the clip seems loose, replace it with a new one.

NOTE: Make sure anti-rattle spring ends on brake pads tabs are correctly installed as per following pictures.

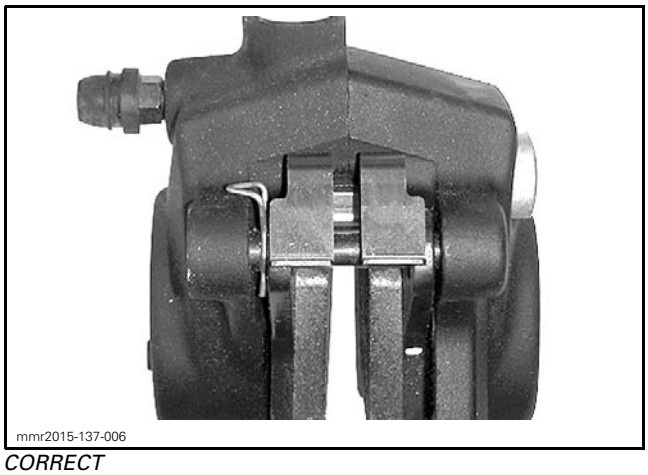

CORRECT

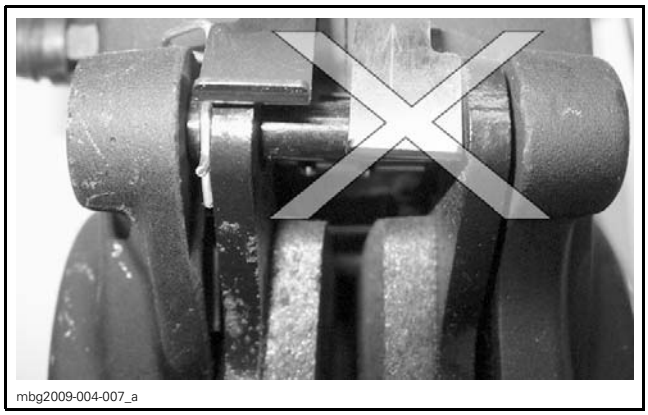

INCORRECT (RIGHT SIDE SPRING CLIP)

4. Operate the brake lever several times to bring the brake pads into contact with the disc brake.
5. Check brake fluid level in master cylinder and refill if necessary.
6. Reinstall the diaphragm and the cover.
7. Ride the vehicle a few minutes to make sure the repair is successful.

CALIPER

Removing the Caliper

1. Open LH side panel.
2. Remove the drive belt guard support. Refer to *DRIVE BELT* subsection.
3. Remove the LH toe hook (if equipped).
4. If the caliper is replaced, refer to *DRAINING THE BRAKE FLUID* in this subsection.
5. Remove the brake pads, Refer to procedure in this subsection.
6. Lift the rear of vehicle and release track tension completely.
7. Turn track to align brake disc slots with caliper bracket screws.
8. Remove caliper screws (4) behind brake disc.

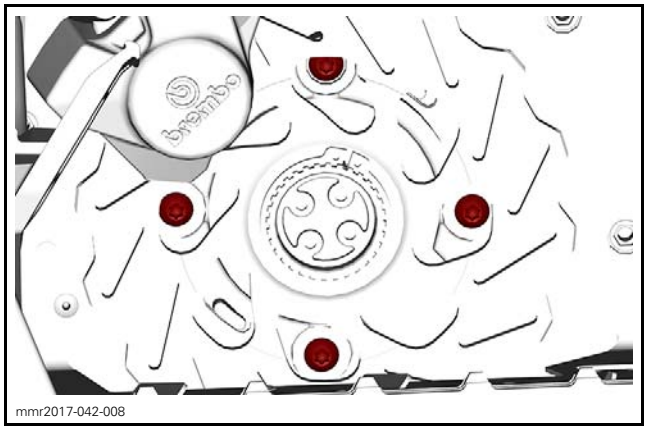

9. Unlock the caliper retaining plate from inside the tunnel.

REQUIRED TOOL	
CALIPER PULLER (P/N 529 036 145)	
PROTECTIVE CAP (P/N 529 036 150)	

10. Install the caliper puller on the brake caliper through brake disc slots.

NOTE: Make sure puller tabs are correctly engaged on caliper.

11. Install the protective cap between caliper puller bolt and plastic cap in drive axle end.

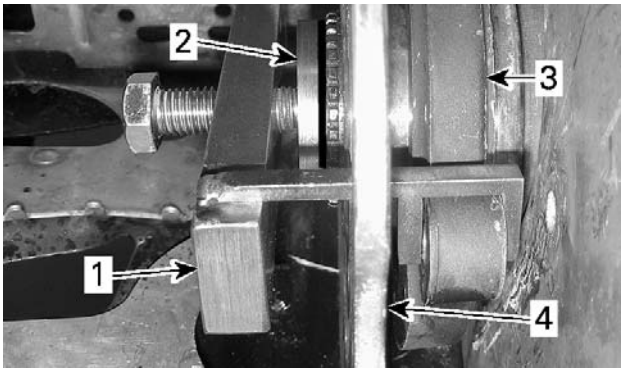

mmr2009-084-002_a

TYPICAL
1. *Caliper puller*
2. *Protective cap*
3. *Caliper bracket*
4. *Brake disc*

12. Tighten caliper puller bolt to separate caliper from drive axle bearing.

NOTICE **Never use an impact tool to operate caliper puller. The caliper or the puller could break.**

13. When brake disc is out of splines, remove it.
14. Remove caliper.

NOTICE **Do not let caliper hang by the hose and do not stretch or twist the hose.**

Inspecting the Caliper

1. Check caliper pistons for:
   – Proper operation
   – Rust
   – Scratches
   – Leaks.
2. Check caliper bracket for:
   – Cracks
   – Rust on bearing shoulder (clean with a steel wood).
3. Replace caliper if required.

Installing the Caliper

1. Using your fingers or a small piece of wood, push both pistons into their bores.
2. Clean brake caliper bearing shoulder with fine steel wool.
3. Apply antiseize lubricant on drive axle splines and on bearing shoulder of caliper bracket.

SERVICE PRODUCT
LOCTITE 767 (ANTI-SEIZE LUBRICANT) (P/N 293 800 070)


mmr2017-042-009

DRIVE AXLE SPLINES

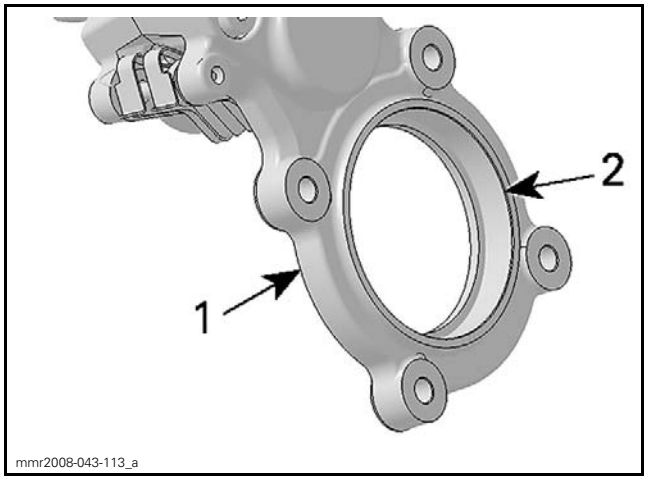

mmr2008-043-113_a

1. *Caliper bracket*
2. *Bearing shoulder*

4. Insert brake disc in the caliper. The brake disc collar must be inserted in the caliper bracket.

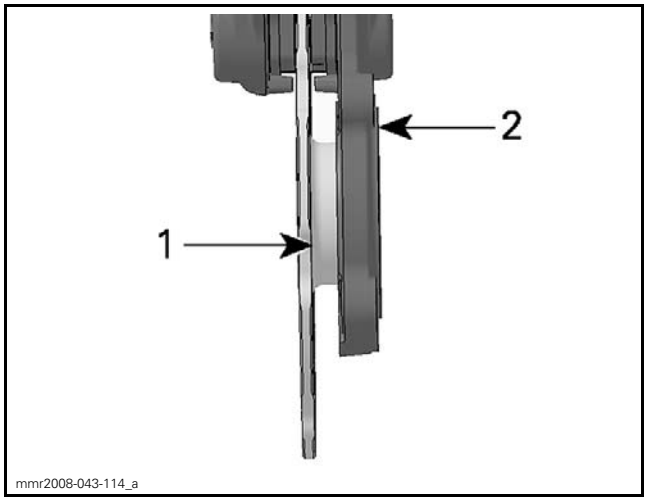

mmr2008-043-114_a

1. *Brake disc collar*
2. *Caliper bracket*

5. Ensure bearing flange is properly locked in the frame. Tabs must be properly inserted in frame slots.

VIEW FROM OUTSIDE FRAME

6. Align brake disc splines with drive axle splines and push brake disc onto drive axle.
7. Push the caliper bracket over the drive axle bearing.

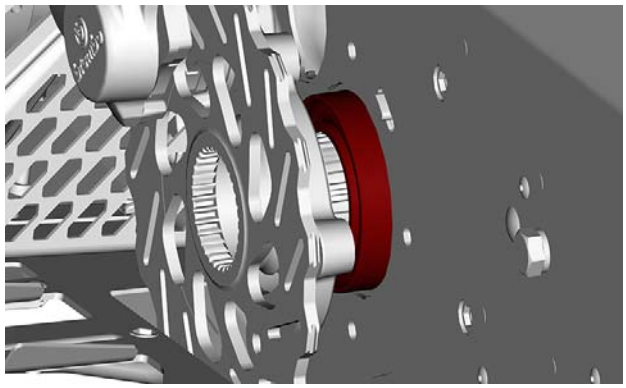

8. Align caliper bracket holes with bearing flange holes and install caliper screws.

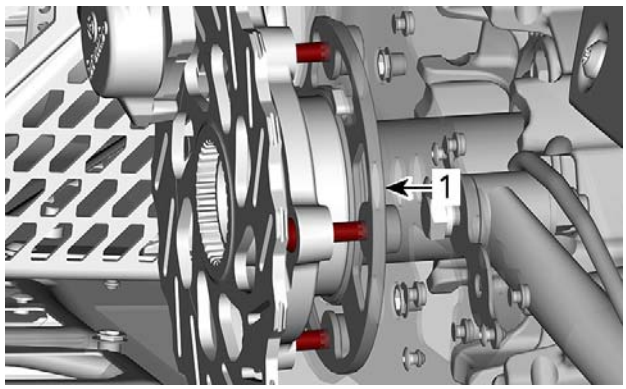

TYPICAL - TUNNEL IS TRANSPARENT FOR CLARITY
1. Bearing flange (inside frame)

9. HAND TIGHTEN each caliper bracket screw evenly in a criss-cross pattern until bracket is correctly positioned against frame.

NOTICE **Never use an air tool to tighten caliper screws. The caliper bracket could crack.**

10. Install the brake pads. Refer to procedure in this subsection.
11. Install the brake disc circlip.
12. Tighten the brake caliper screws to specification.

TIGHTENING TORQUE	
Caliper screws	24.5 N•m ± 3.5 N•m (18 lbf•ft ± 3 lbf•ft)

13. Apply brake fluid on Banjo fitting threads.
14. Install the Banjo fitting with two new sealing washers.
15. Tighten Banjo fitting to specification.

TIGHTENING TORQUE	
Banjo fitting	35 N•m ± 1 N•m (26 lbf•ft ± 1 lbf•ft)

16. Fill and bleed the brake system. Refer to *MAINTENANCE* in this subsection.
17. Install all other removed parts.
18. Check the operation of the brake carefully before riding the snowmobile.

BRAKE DISC

Inspecting the Brake Disc (Not Removed)

1. Remove the disc brake protective cover.
2. Check for scoring, cracking or bending, replace as required.
3. Measure brake disc thickness. If the brake disc is out of specification, replace it with a new one.

NOTICE **Brake disc should never be machined.**

BRAKE DISC SPECIFICATION	
Minimum thickness	4.5 mm (.177 in)

Inspecting the Brake Disc (Removed)

1. Check brake disc splines and drive axle splines for wear or other damages. Replace defective parts.

Removing and Installing the Brake Disc

Follow procedures for caliper removal and installation.

MASTER CYLINDER

Removing the Master Cylinder

NOTE: If the master cylinder is not replaced, omit the steps concerning brake system draining and brake hose removal.

1. Drain brake system, Refer to *MAINTENANCE* in this subsection.
2. Remove the Banjo fitting and discard the sealing washers.

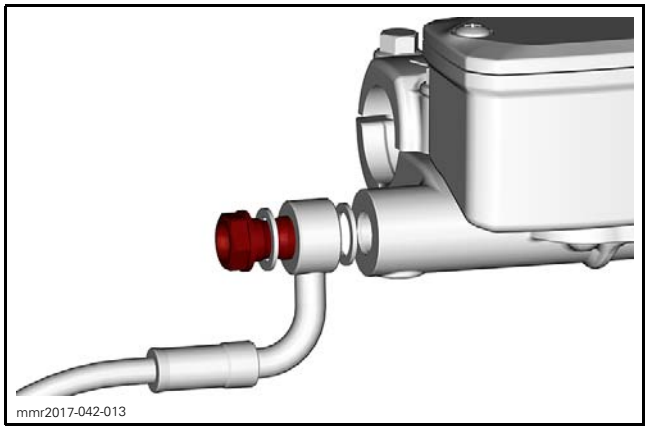
mmr2017-042-013

3. Remove screws and clamp securing master cylinder to handlebar.

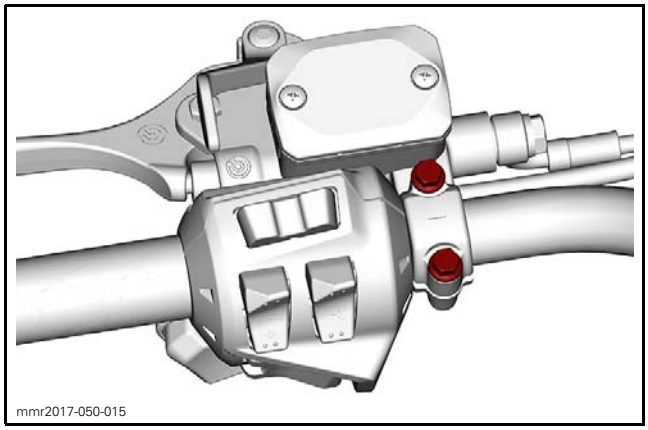
mmr2017-050-015

4. Remove master cylinder.

NOTICE **Do not let master cylinder hang by the hose and do not stretch or twist the hose.**

Inspecting the Master Cylinder

1. Discard all remaining fluid inside master cylinder reservoir.
2. Check if the reservoir cap seal is brittle, hard or damaged. Replace as necessary.
3. If the reservoir is damaged or leaking, replace master cylinder.
4. Check if brake lever is bent, cracked or otherwise damaged. Replace brake lever if required.

Installing the Master Cylinder

1. Place the master cylinder on the handlebar.
2. Install master cylinder retaining clamp with its arrow pointing toward the front of vehicle.

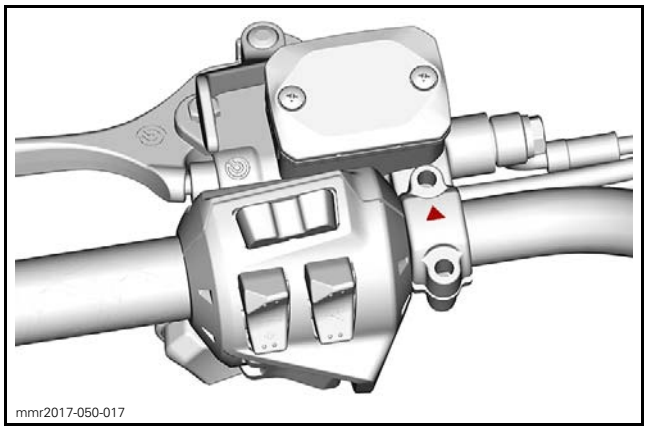
mmr2017-050-017

3. Install master cylinder clamp screws and tighten loosely.
4. With the handlebar in the straight ahead position, place the reservoir parallel to the ground.
5. Tighten master cylinder clamp screws to specification.

TIGHTENING TORQUE	
Master cylinder clamp screws	9 N•m ± 1 N•m (80 lbf•**in** ± 9 lbf•**in**)

6. Install the Banjo fitting with two new sealing washers.
7. Tighten Banjo fitting to specification.

TIGHTENING TORQUE	
Banjo fitting	27 N•m ± 1 N•m (20 lbf•ft ± 1 lbf•ft)

8. Fill and bleed the brake system. Refer to *MAINTENANCE* in this subsection.
9. Install brake light switch.
10. Install steering cover.

BRAKE LEVER

Replacing the Brake Lever

Always lubricate brake lever pivot when replacing brake lever or pivot. Refert to *LUBRICATING THE BRAKE LEVER PIVOT*.

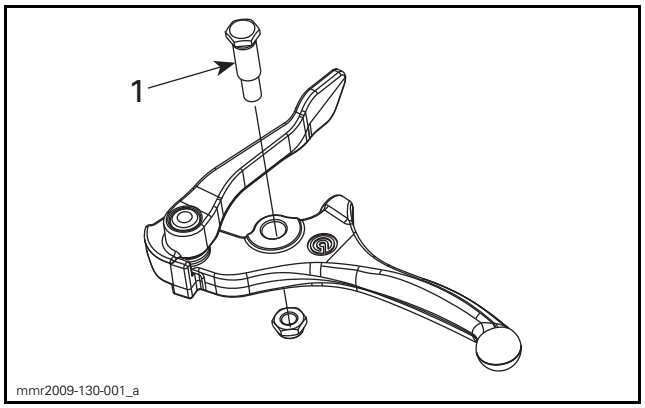

TYPICAL
1. Lubricate brake lever pivot

Tighten the pivot nut of brake lever to specification.

TIGHTENING TORQUE	
Brake lever pivot nut	6 N•m ± 1 N•m (53 lbf•**in** ± 9 lbf•**in**)

BRAKE LIGHT SWITCH

Testing the Brake Light Switch Resistance

1. Remove the upper body module. Refer to *BODY* subsection.
2. Disconnect the brake light switch connector located on the ECM.

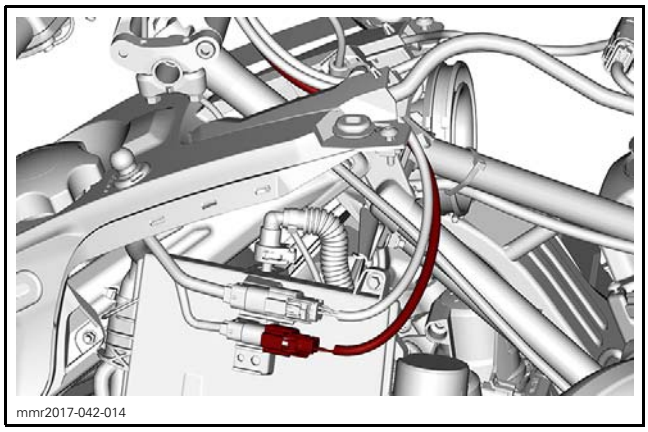

3. Validate switch operation with an ohmmeter as follows.

LH HANDLEBAR CONNECTOR (4-PIN)		
SWITCH	WIRE	RESISTANCE
Released	Pin 2 and pin 4	Infinite (OL)
Squeezed and held		Close to 0 Ω

If readings do not correspond to the above specifications, replace switch.

If readings correspond to the above specifications, check fuse, wiring and connectors going to switch. Repair or replace defective part(s).

Removing the Brake Light Switch

1. Remove the upper body module. Refer to *BODY* subsection.
2. Disconnect the brake light switch connector located on the ECM.

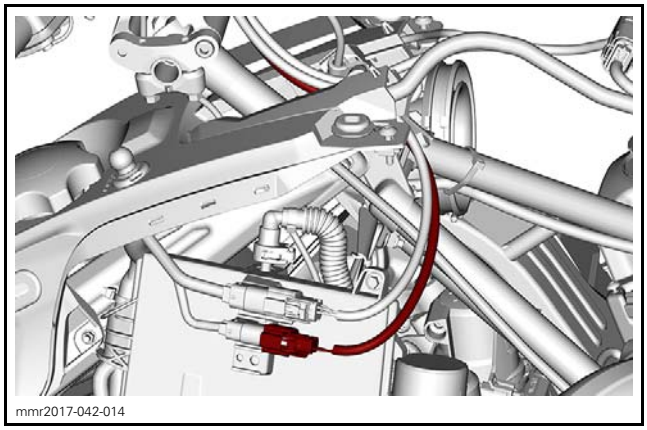

3. Slip a small screwdriver between brake light switch and master cylinder housing and separate them.

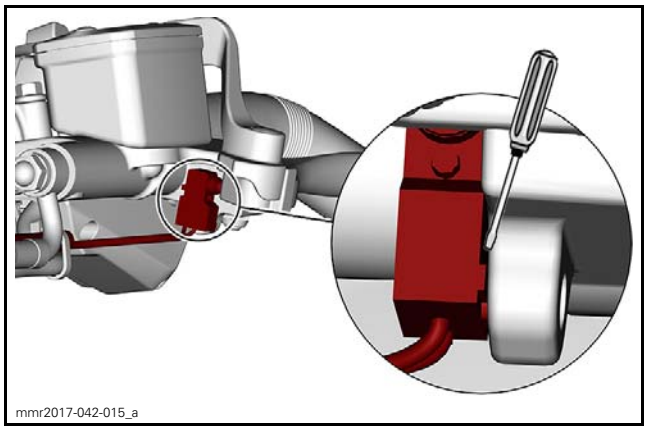

4. Cut all locking ties securing switch wires.

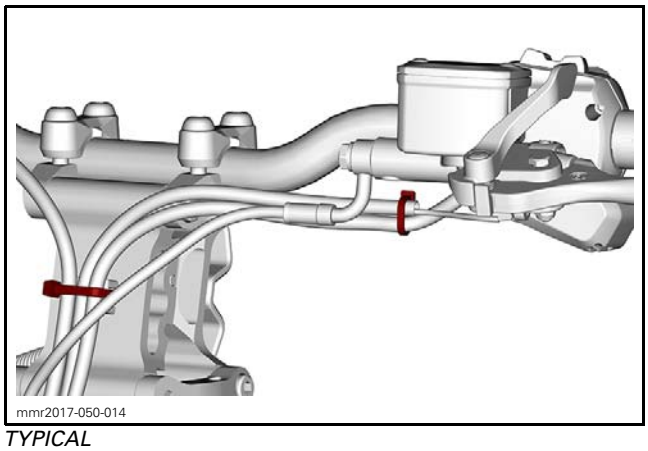

TYPICAL

5. Remove switch wires from connector. Refer to *WIRING HARNESS AND CONNECTORS*.

NOTE: Check wires location for reinstallation.

Installing the Brake Light Switch

The installation is the reverse of the removal procedure. However, pay attention to the following.

Plug switch wires into connector as per following tables.

LH HANDLEBAR CONNECTOR (4-PIN)	
WIRE	CONNECTOR
GRAY	Pin 4
BROWN	Pin 2

Check if switch is working properly.

Install new locking ties.

BRAKE HOSE

Replacing the Brake Hose

1. Remove the console. Refer to *BODY* subsection.
2. Drain the brake system. Refer to *MAINTENANCE* in this subsection.
3. Remove Banjo fittings at both ends of hose. Refer to *REMOVING THE MASTER CYLINDER* and *REMOVING THE CALIPER*.
4. Remove fasteners that secure the hose clamps to the frame.

NOTICE **Take care not to overdrill the lower clamp rivet. The fuel tank could be damaged.**

The installation is the reverse of the removal procedure. However, pay attention to the following.

Install new sealing washer.

TIGHTENING TORQUE	
Middle clamp nut	2.3 N•m ± 0.2 N•m (20 lbf•**in** ± 2 lbf•**in**)
Caliper Banjo fitting	35 N•m ± 1 N•m (26 lbf•ft ± 1 lbf•ft)
Master cylinder Banjo fitting	27 N•m ± 1 N•m (20 lbf•ft ± 1 lbf•ft)

CHAINCASE

SERVICE TOOLS

Description	Part Number	Page
BEARING PULLER/PUSHER	529 036 111	234
BEARING PULLER/PUSHER	529 036 112	234

SERVICE PRODUCTS

Description	Part Number	Page
LOCTITE 5900	293 800 066	240
SYNTHETIC CHAINCASE OIL	779156	231

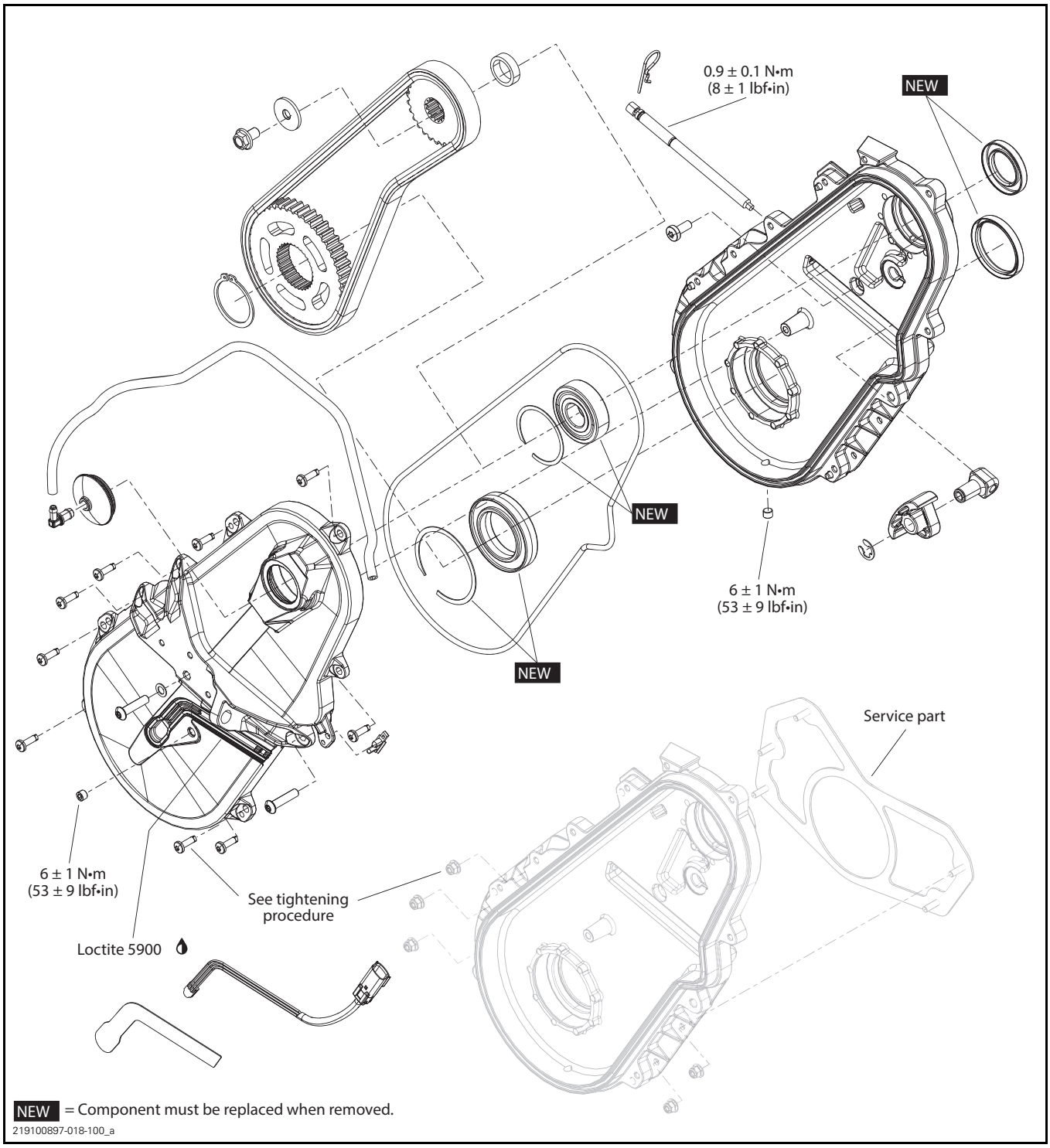
0.9 ± 0.1 N•m
(8 ± 1 lbf•in)
NEW
NEW
NEW
6 ± 1 N•m
(53 ± 9 lbf•in)
Service part
6 ± 1 N•m
(53 ± 9 lbf•in)
See tightening procedure
Loctite 5900
NEW = Component must be replaced when removed.
219100897-018-100_a

GENERAL

During assembly/installation, use the torque values and service products as in the exploded view.

Clean threads before applying a threadlocker. Refer to *SELF-LOCKING FASTENERS* and *LOCTITE APPLICATION* at the beginning of this manual for complete procedure.

⚠ WARNING

Torque wrench tightening specifications must be strictly adhered to.
Locking devices must be replaced with new ones when removed (e.g.: locking tabs, elastic stop nuts, cotter pin, etc.).

NOTICE **Hoses, cables and locking ties removed during a procedure must be reinstalled as per factory standards.**

MAINTENANCE

CHAINCASE OIL

Recommended Chaincase Oil

RECOMMENDED SERVICE PRODUCT
SYNTHETIC CHAINCASE OIL (P/N 779156)

NOTICE **Use only the recommended type oil when servicing. Do not mix synthetic oil with other types of oil.**

Verifying the Chaincase Oil Level

1. Place vehicle on a level surface.
2. Remove the check plug beside the speed sensor on the chaincase cover. Oil level must be equal with the lower edge.

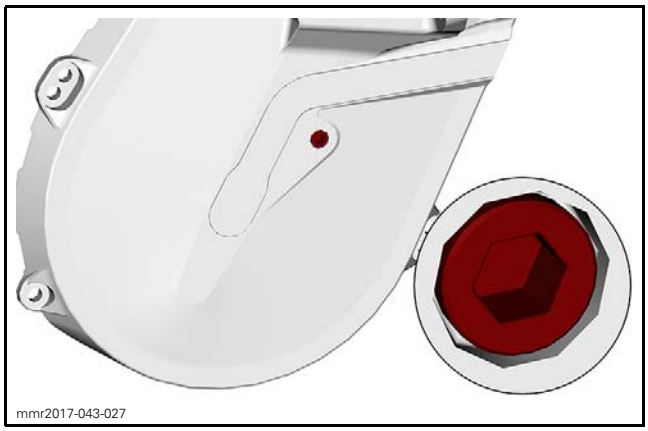
mmr2017-043-027

3. Remove metal particles from magnetic check plug.

NOTE: It is normal to find metallic particles stuck to magnetic check plug. If bigger pieces of metal are found, remove the chaincase cover and inspect the chaincase parts.

4. To add oil, remove the filler cap on top of chaincase cover.

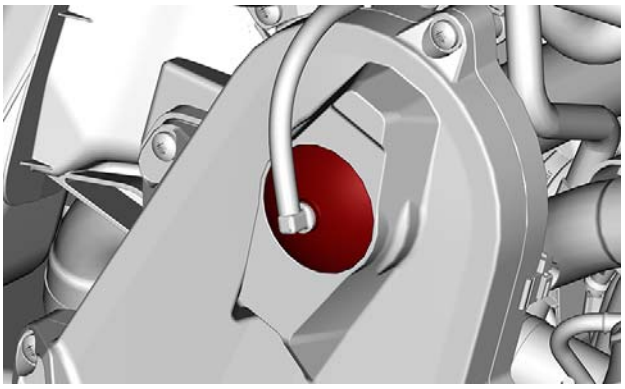
mmr2017-041-001

5. Pour recommended oil in chaincase by the filler hole until oil comes out by the magnetic check plug hole.
6. Reinstall magnetic check plug and torque to specification.

TIGHTENING TORQUE	
Magnetic check plug	6 N•m ± 1 N•m (53 lbf•**in** ± 9 lbf•**in**)

Replacing the Chaincase Oil

1. Place vehicle on a level surface.
2. Place a container under vehicle in line with chaincase to catch chaincase oil.
3. Remove the drain plug on the bottom of the chaincase.

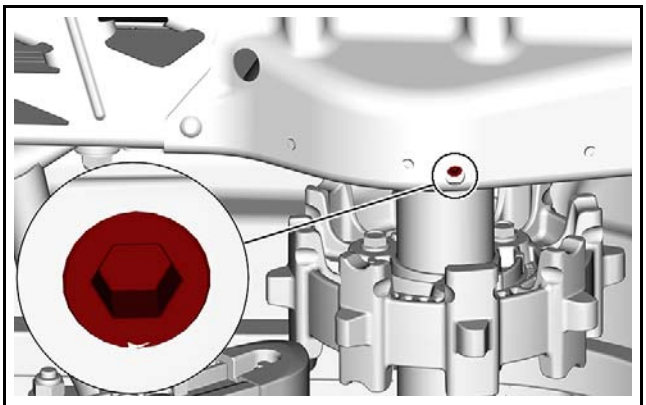
mmr2017-043-024_a

4. Reinstall the drain plug.

TIGHTENING TORQUE	
Drain plug	6 N•m ± 1 N•m (53 lbf•**in** ± 9 lbf•**in**)

5. Remove the magnetic check plug
6. Pour approximately 350 ml (12 U.S. oz) of recommended oil in chaincase through the filler hole until oil comes out by the magnetic check plug hole.
7. Clean the magnetic check plug. Refer to *CHAINCASE OIL LEVEL VERIFICATION*, see procedure in this subsection.

DRIVE CHAIN

Adjusting the Drive Chain

1. Tighten tensioner adjustment screw **BY HAND**.

NOTE: Turn adjustment screw until resistance is strong enough that it can not be turned by hand.

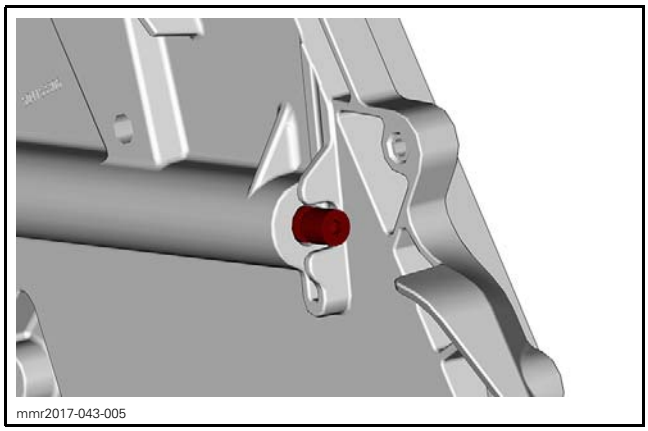
mmr2017-043-005

PROCEDURES

CHAINCASE

Chaincase Disassembly

Removing the Chaincase Cover

1. Apply parking brake.
2. Remove the muffler. Refer to *EXHAUST SYSTEM* subsection.
3. Remove the filler plug on the chaincase cover.

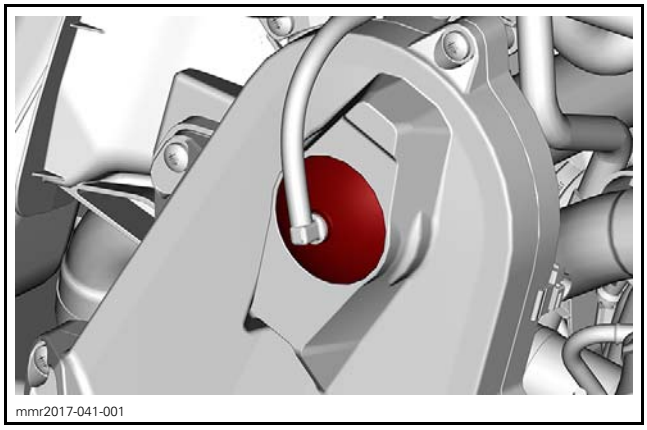
mmr2017-041-001

4. Place a container under vehicle in line with chaincase to catch chaincase oil.
5. Remove the drain plug on the bottom of the chaincase.

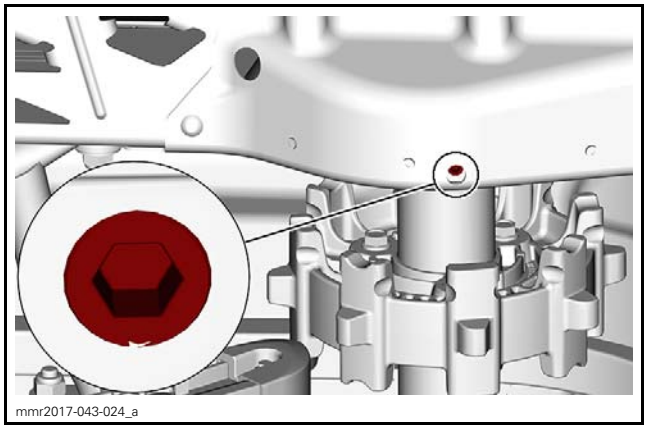
mmr2017-043-024_a

6. Disconnect speed sensor connector.

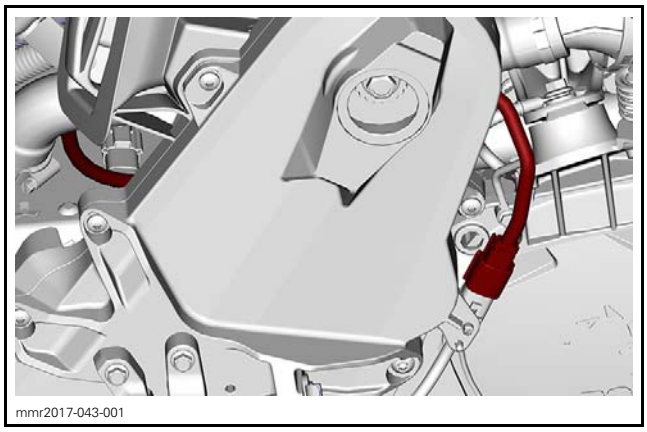
mmr2017-043-001

7. Remove the RH side toe hook and the screw securing the cover to the footrest.

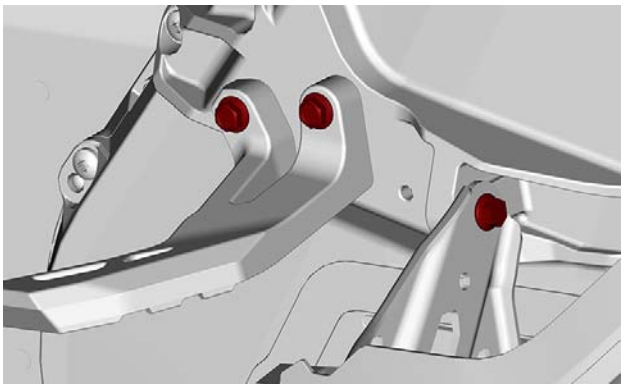
mmr2017-043-002

8. Remove chaincase cover screws.

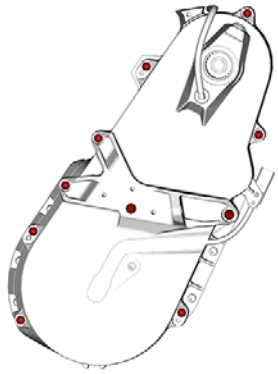
mmr2017-043-003

TYPICAL

9. Pull on bottom of chaincase cover to drain oil.
10. Wait a moment then remove the cover completely.

Removing the Chain Tensioner

1. Remove the hair pin from behind the chaincase.

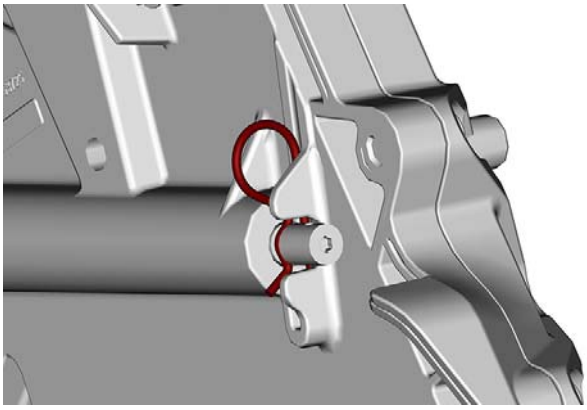
219100987-018-703

2. Remove the tensioner adjustment screw.

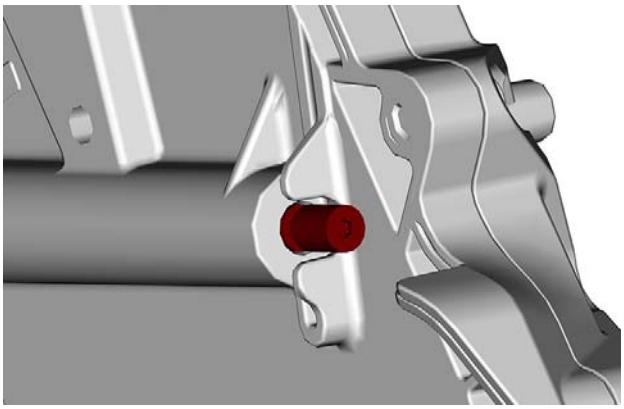
219100987-018-702

3. Remove tensioner.

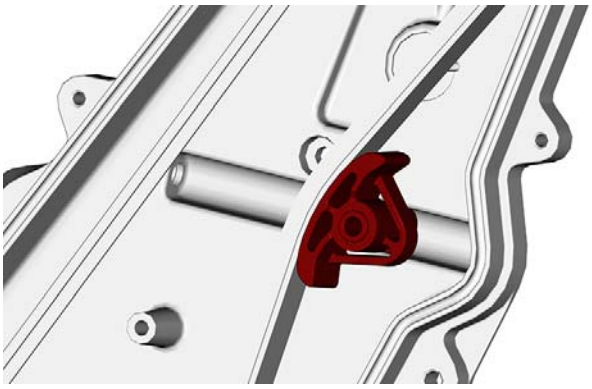
mmr2017-043-006

NOTE: The following steps are required only if the tensioner or the slider is defective.

4. Remove the circlip securing the slider to tensioner.

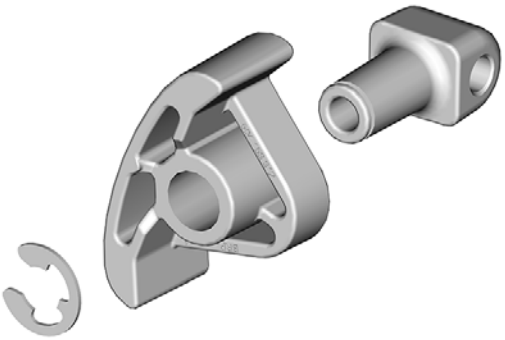
mmr2017-043-007

1. Circlip
2. Tensioner
3. Slider

Removing the Drive Chain and Sprocket

NOTE: Prior to removing the drive chain, check the drive chain deflection.

1. Remove the upper sprocket screw and its conical spring washer.

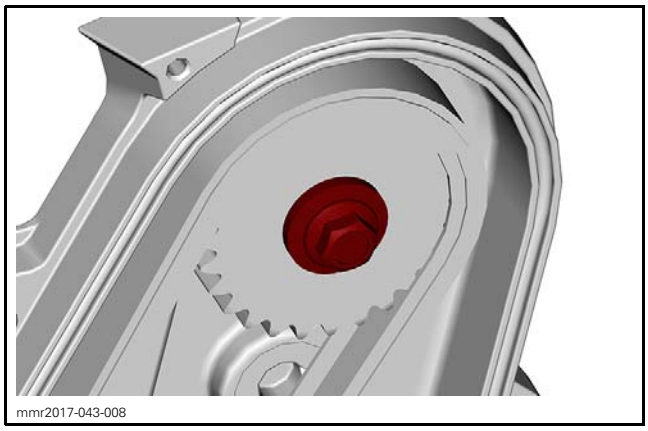
mmr2017-043-008

2. Remove the lower sprocket circlip.

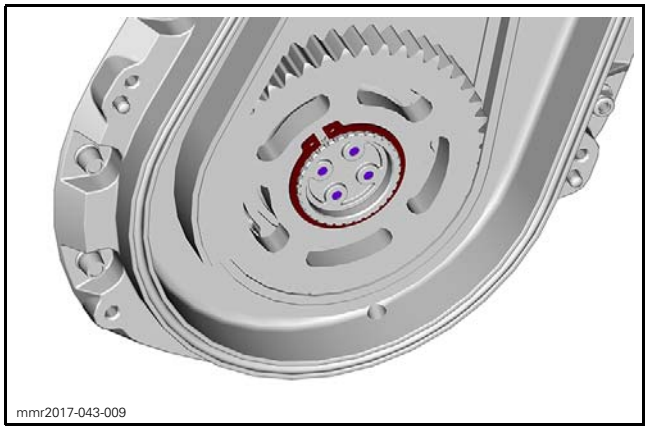
mmr2017-043-009

3. Remove the upper sprocket, lower sprocket and drive chain simultaneously.

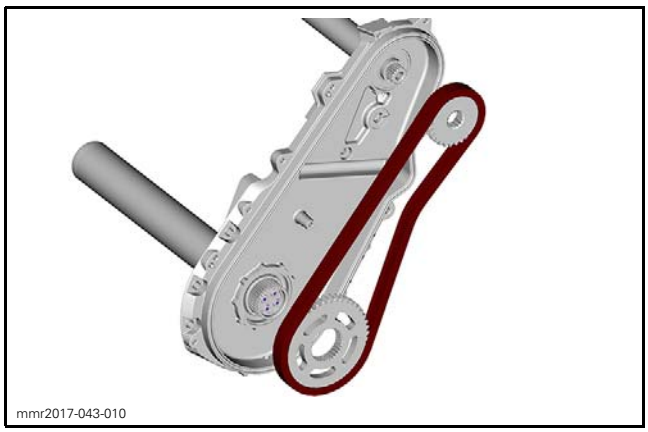
mmr2017-043-010

4. Remove the countershaft spacer.

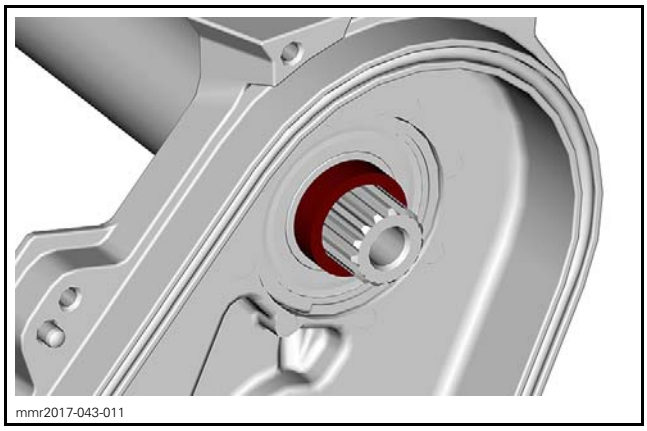
mmr2017-043-011

Removing the Chaincase Bearing

1. Remove countershaft or drive axle, depending which bearing is replaced. Refer to the appropriate subsection, *DRIVEN PULLEY AND COUNTERSHAFT* or *DRIVE AXLE*.
2. Remove snap ring securing bearing into chaincase.

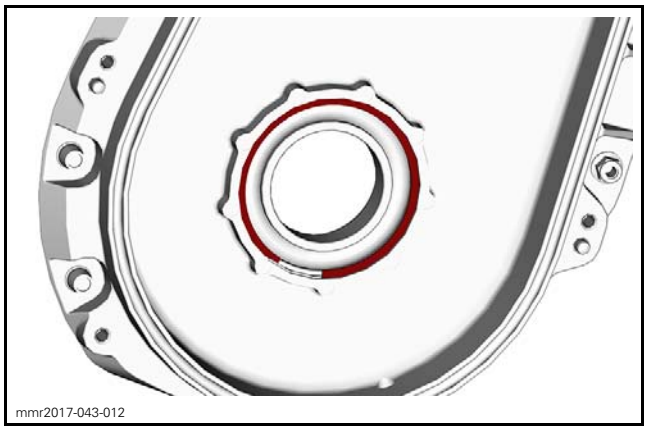
mmr2017-043-012

3. Install the appropriate bearing extractor:

BEARING	REQUIRED TOOL
Countershaft	BEARING PULLER/PUSHER (P/N 529 036 111)
Drive axle	BEARING PULLER/PUSHER (P/N 529 036 112)

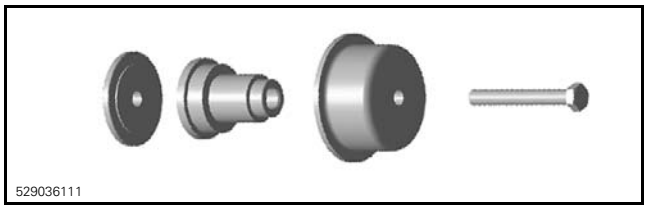
529036111

COUNTERSHAFT

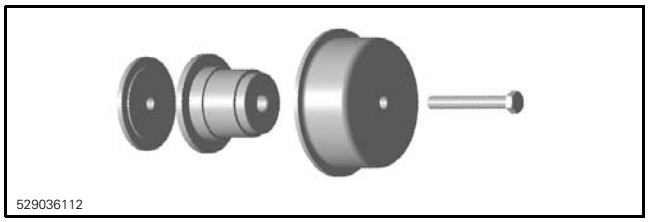

DRIVE AXLE

4. Install the extractor/installer tool behind the bearing.

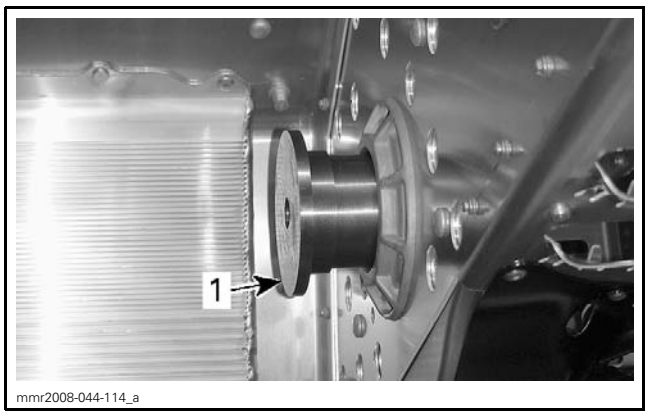

TYPICAL
1. Extractor/installer tool

5. Install the extractor cup over bearing.
6. Tighten the extractor/installer tool screw to remove the bearing.

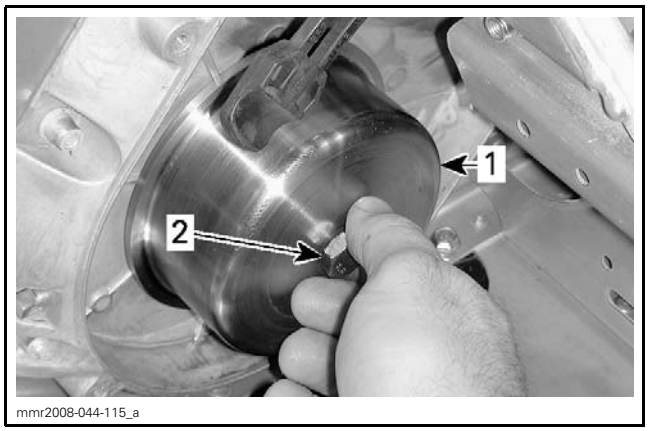

TYPICAL
1. Extractor cup
2. Tighten to remove bearing

7. Using a seal puller, remove and discard the oil seal.

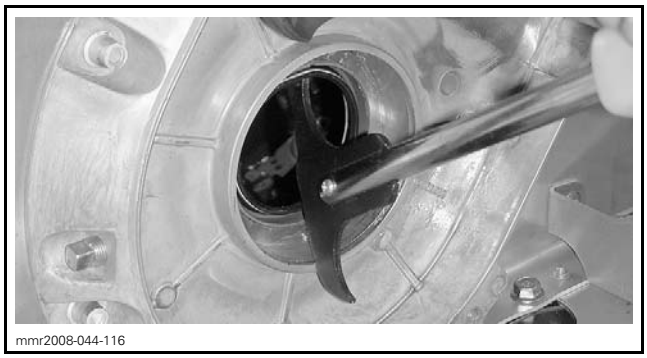

TYPICAL

Removing the Chaincase Housing

IMPORTANT:Ensure you have a new mounting plate on hand along with the 5 attachment nuts before removing the chaincase assembly. Refer to the appropriate *ELECTRONIC PARTS CATALOG* that fits your model to determine required part number.

1. Remove the drive axle. Refer to *DRIVE AXLE* subsection.
2. Remove the countershaft. Refer to *DRIVEN PULLEY AND COUNTERSHAFT* subsection.
3. Remove the screw securing the coolant reservoir.

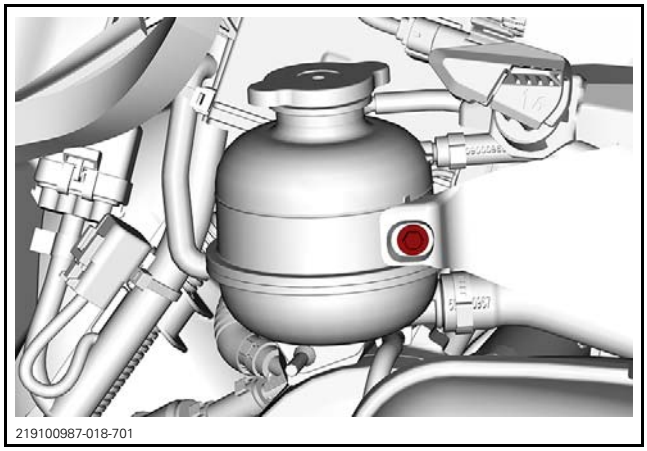

4. Remove the Huck rivets. Refer to *FRAME* subsection for proper removal procedure.

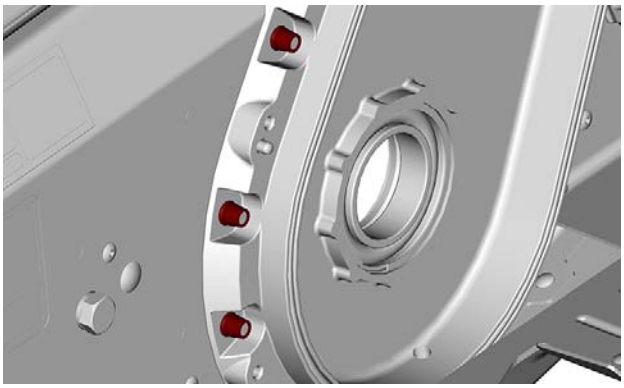
mmr2017-043-014

5. Remove nuts beside the footrest.

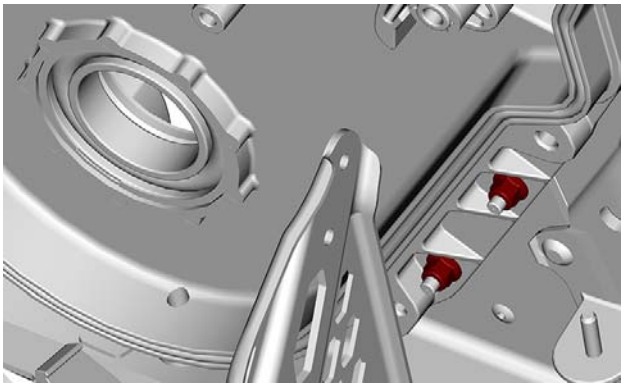
mmr2017-043-015

6. Remove the screw above the tensioner.


mmr2017-043-016

7. Using 2 large pry bars inserted between chaincase and frame, pry chaincase out of vehicle.
8. Remove the rewind starter rope guide screws.

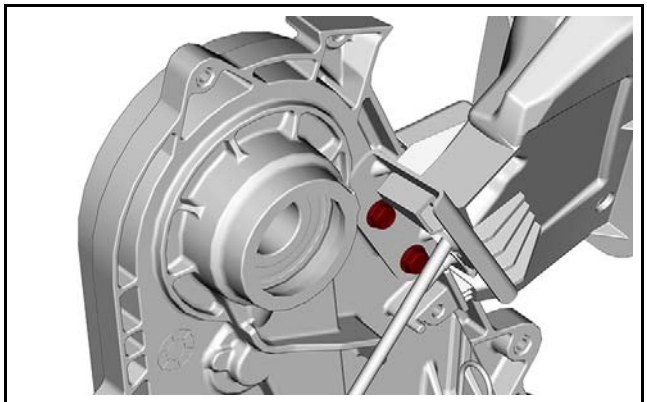
mmr2017-043-017

Inspecting the Chaincase

Inspecting the Chaincase Cover

Check the cover for cracks or other damages. Replace it if necessary.

Check if O-ring inside cover is brittle, hard or damaged. Replace it if necessary.

Inspecting the Chain Tensioner

Check chain tensioner slider for wear or other damages. A longitudinal groove in the slider indicate a broken chain link. Replace if necessary.

Check threads of tensioner adjustment screw for damages or wear.

Check straightness of adjustment screw. Replace screw if necessary.Check chaincase for damages.

Inspecting the Drive Chain and Sprockets

Visually inspect the drive chain and sprockets for:
- Wear
- Cracks
- Damages teeth
- Missing or broken links.

If a problem is detected, replace drive chain and sprockets as an assembly.

Check the drive chain deflection.

If the deflection is greater than 38 mm (1-1/2 in) without the chain tensioner, replace the drive chain.

Inspecting the Chaincase Bearing

Check for worn or defective bearings.

Chaincase Assembly

Installing the Chaincase Housing

The installation is the reverse of the removal procedure. However, pay attention to the following.

Remove the clinch studs from the frame.

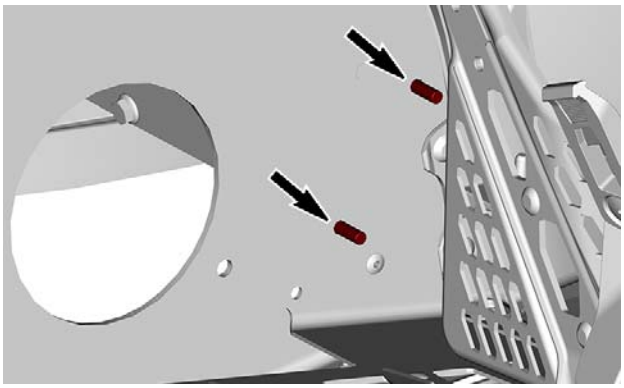
mmr2017-043-025_a

Use a suitable box to support the frame around the stud head and hit the stud from the outside with a hammer.

Install the new mounting plate underneath the frame.

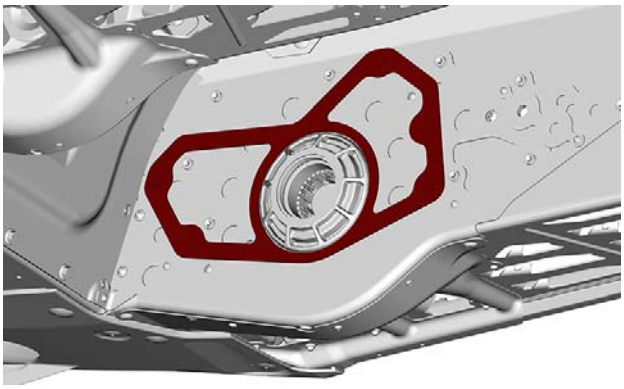
mmr2017-043-026

UNDERNEATH FRAME

Install 5 elastic flanged nuts to secure chaincase on mounting plate.

Tighten fasteners as per the following sequence.

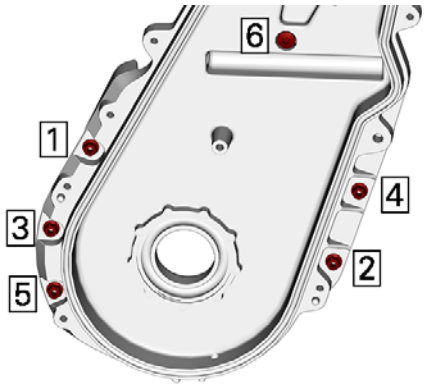

mmr2017-043-018_a

Proceed with drive chain adjustment. Refer to *PERIODIC MAINTENANCE PROCEDURES* subsection.

Refill chaincase with recommended oil. Refer to *REPLACING THE CHAINCASE OIL* in *PERIODIC MAINTENANCE PROCEDURES* subsection.

Installing Chaincase Bearing

The installation is the reverse of the removal procedure. However, pay attention to the following.

Install the new oil seal on the extractor/installer tool. Position the lips toward bearing.

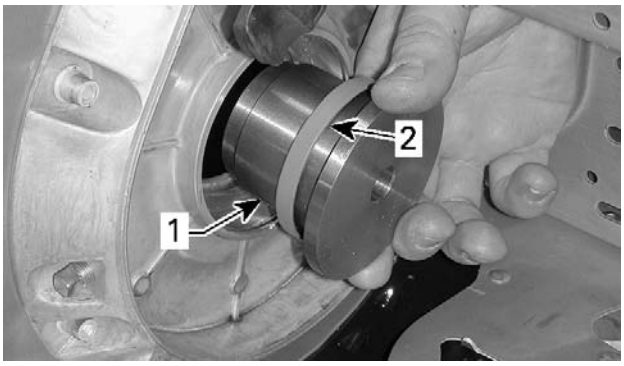

mmr2008-044-117_a

TYPICAL
1. *Extractor/installer tool*
2. *Oil seal lips on this side*

Install the extractor cup inside frame.

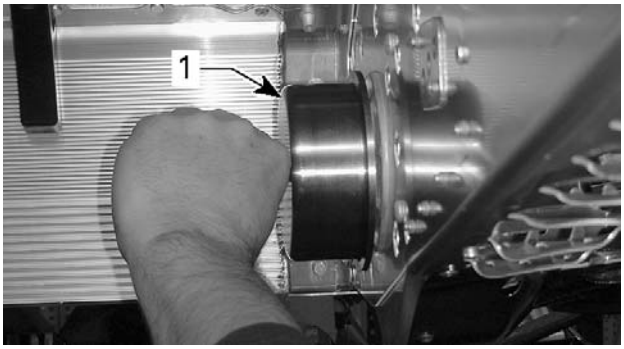

mmr2008-044-118_a

TYPICAL
1. *Extractor cup*

Tighten the extractor/installer tool screw to install the oil seal.

Install the large washer and the extractor/installer tool screw inside frame.

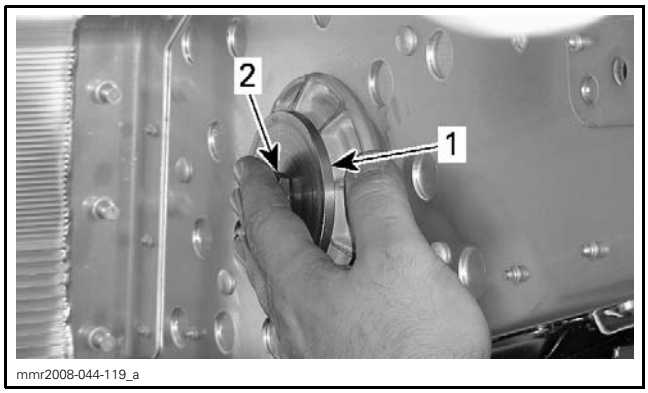

TYPICAL
1. *Large washer*
2. *Extractor/installer tool screw*

In chaincase, install new bearing and the extractor/installer tool.

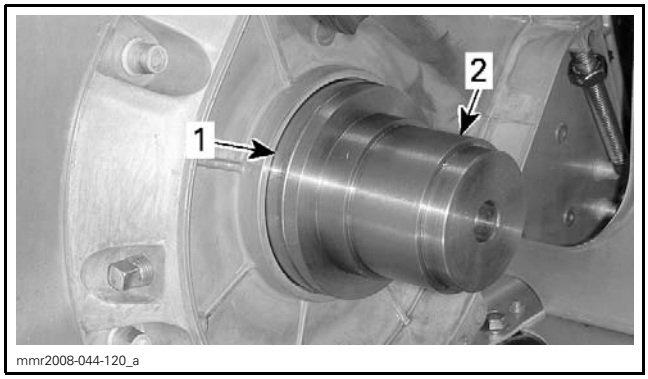

TYPICAL
1. *Bearing*
2. *Extractor/installer tool*

Tighten the extractor/installer tool screw to install the bearing.

Install new snap ring.

Installing the Drive Chain and Sprockets

The installation is the reverse of the removal procedure. However, pay attention to the following.

Make sure to install sprockets with their inscriptions outward.

Install the conical spring washer on the upper sprocket with its concave side toward sprocket.

Installing the Chain Tensioner

The installation is the reverse of the removal procedure. However, pay attention to the following.

If the tensioner has been disassembled, make sure circlip turns freely and slider moves easily.

Proceed with drive chain adjustment. Refer to *PERIODIC MAINTENANCE PROCEDURES* subsection.

Installing the Chaincase Cover

The installation is the reverse of the removal procedure. However, pay attention to the following.

Ensure cover seal is positioned correctly in its groove.

Install new sealing washer with screw no.10. See next illustration.

Tighten chaincase cover screws in accordance with the following sequence.

Screw 11 is present on long chaincase only.

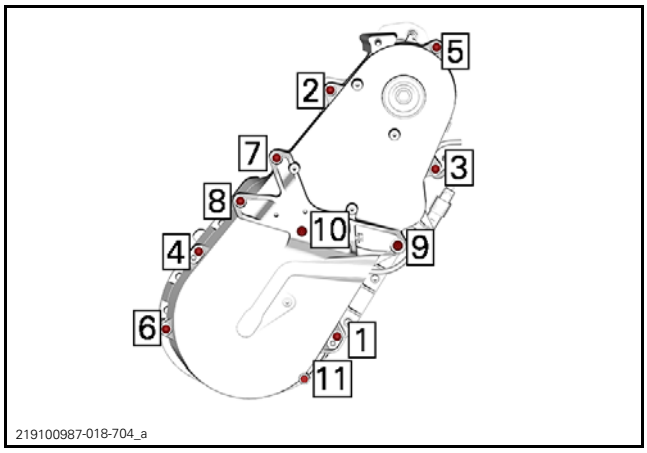

TIGHTENING TORQUE		
Screws 1 to 8 and 11 (long chaincase)	Same chaincase	10 N•m ± 2 N•m (89 lbf•**in** ± 18 lbf•**in**)
	New chaincase	15 N•m ± 1 N•m (133 lbf•**in** ± 9 lbf•**in**)
Screw 9		24.5 N•m ± 3.5 N•m (18 lbf•ft ± 3 lbf•ft)
Screw 10		16 N•m ± 2 N•m (142 lbf•**in** ± 18 lbf•**in**)

Refill chaincase with recommended oil. Refer to *CHAINCASE OIL REPLACEMENT* in *PERIODIC MAINTENANCE PROCEDURES* subsection.

Reinstall all other removed parts.

SPEED SENSOR (VSS)

The speed sensor is a hall effect sensor.

Speed Sensor Location

The speed sensor is mounted in the chaincase cover.

Testing the Speed Sensor Signal

1. Ensure speed sensor is properly connected.
2. Wake up ECM.

3. Back-probe VSS connector as per table and test for proper specification.

NOTICE **Be careful not to damage connector seals when back probing.**

SPEED SENSOR (VSS) CONNECTOR	SPECIFICATION
Pin 2	Ground
Pin 3	5 Vdc reference voltage

If test failed, check wiring harness going to ECM.

4. Lift and support rear of vehicle.
5. Back-probe VSS connector as per table and test for proper specification.
6. Rotate track/driven pulley.

SPEED SENSOR SIGNAL TEST			
ROTATE DRIVEN PULLEY	SPEED SENSOR CONNECTOR (SENSOR SIDE)		VOLTAGE
	Pin 1	Pin 2	Alternate 7 Vdc and 0 Vdc

If reference voltage and ground are available at sensor, but no signal, replace sensor.

NOTE: During chaincase disassembly, ensure magnets are intact on shaft.

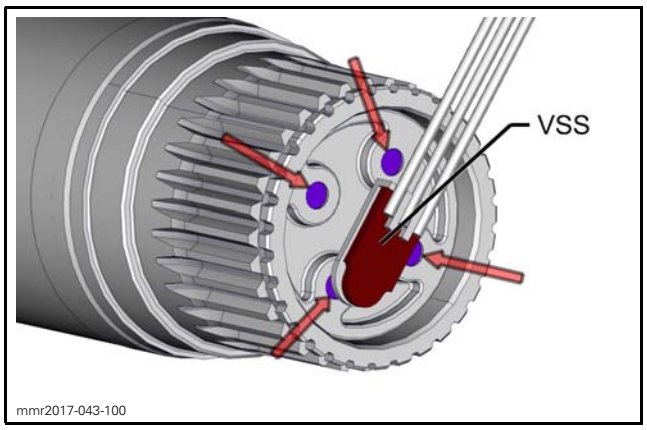

Measure the distance between magnetic cap and end of shaft. It must be as specified.

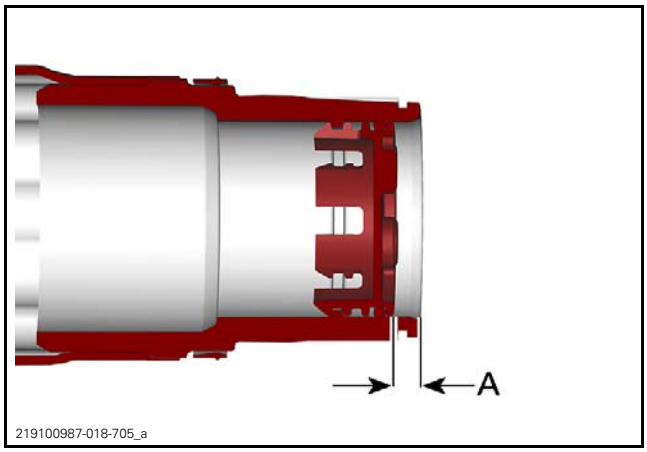

A. Distance to measure

DISTANCE SPECIFICATION	
no. A Measured between magnetic cap and shaft end	5 mm (.2 in)

Replacing the Speed Sensor

The sensor can be replaced with the chaincase cover as an assembly. In such a case, refer to *CHAINCASE* subsection.

To replace sensor only, proceed as follows.

Removing the Speed Sensor

1. Remove chaincase cover. Refer to procedure in this subsection.
2. Heat the upper end of the speed sensor protective plate with a heat gun.

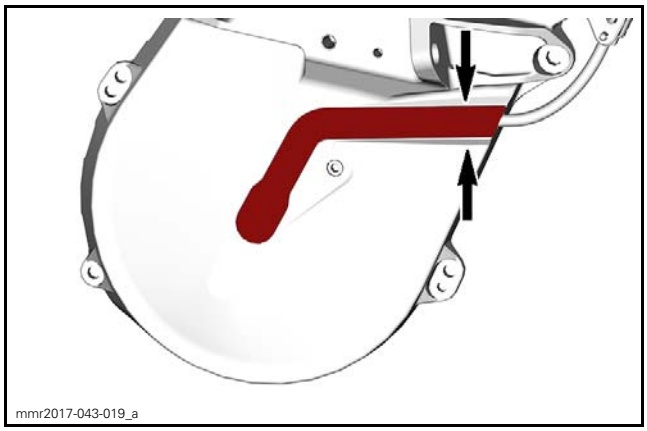

3. Use a flat screwdriver to pry out the end of the protective plate from chaincase cover.

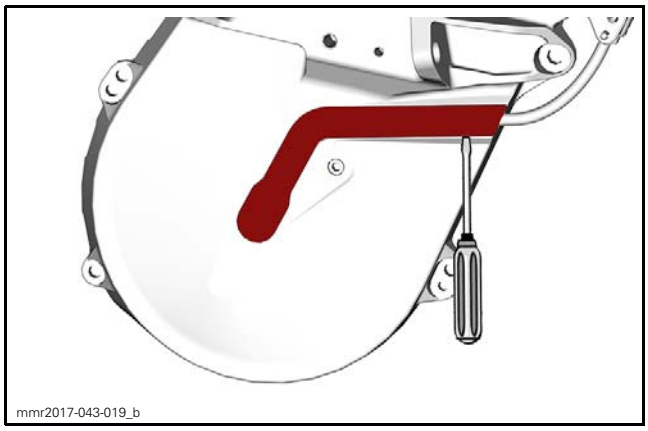

NOTICE **Use care when prying out the plate not to damage the chaincase cover.**

4. Heat the next section of the plate.
5. Pry out the heated section using the flat screwdriver.
6. Repeat steps 4 and 5 until the protective plate is completely removed.
7. Remove the speed sensor.
8. Use the flat screwdriver to remove the remaining sealant from the chaincase cover.

NOTICE **Do not apply excessive pressure when removing the remaining sealant not to damage the chaincase cover.**

9. Rub the sealant using a scouring pad.

Installing the Speed Sensor

Make sure surface is clean and free of grease.

The assembly must be watertight.

PRODUCT REQUIRED
LOCTITE 5900 (P/N 293 800 066)

1. Apply 3 beads of sealant in the chaincase cover as per the following illustration.

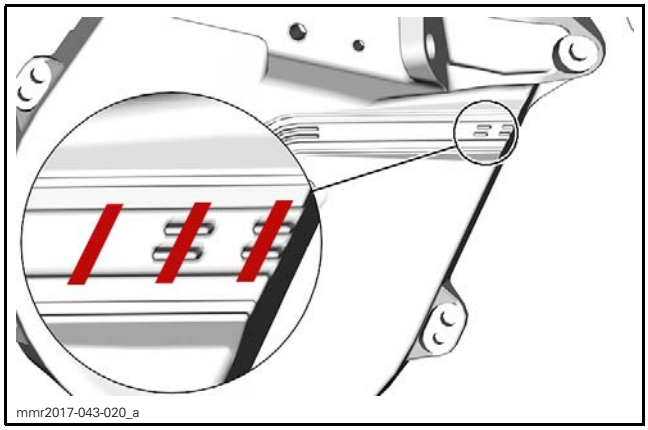

2. Install the speed sensor in the chaincase cover.

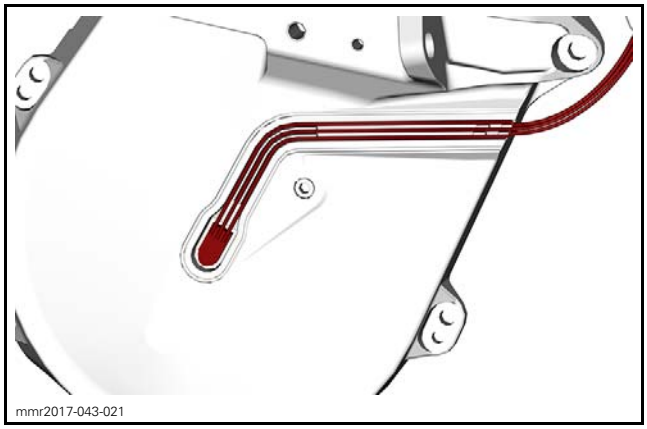

3. Apply sealant all around the protective plate bed on the chaincase cover.

Follow the pattern shown on the next picture.

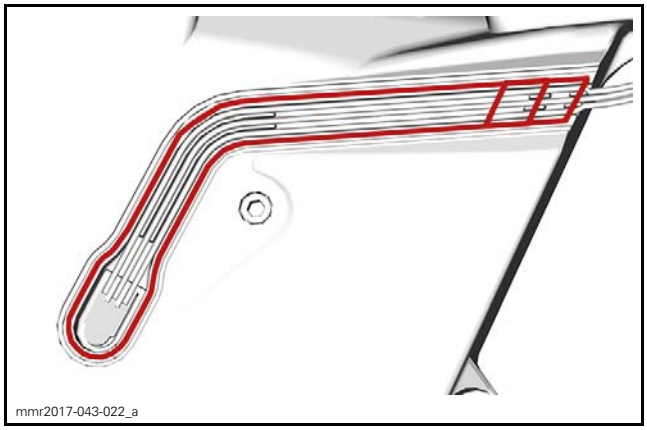

4. Place the protective plate in position and firmly push in order to evacuate all the surplus sealant. Keep pressure for at least 1 minute.
5. Wipe off all the sealant surplus.
6. Once cleaned up, inspect all the circumference for sealant lacks.

NOTE: Sealant must be visible all around.

7. Place some adhesive tape on the protective plate to maintain a pressure for at least 24 hours.

NOTE: Wait for at least 1 hour before exposing vehicle to cold temperature.

8. Reinstall chaincase cover. Refer to procedure in this subsection.

DRIVE AXLE

SERVICE PRODUCTS

Description	Part Number	Page
SYNTHETIC SUSPENSION GREASE	779163	243

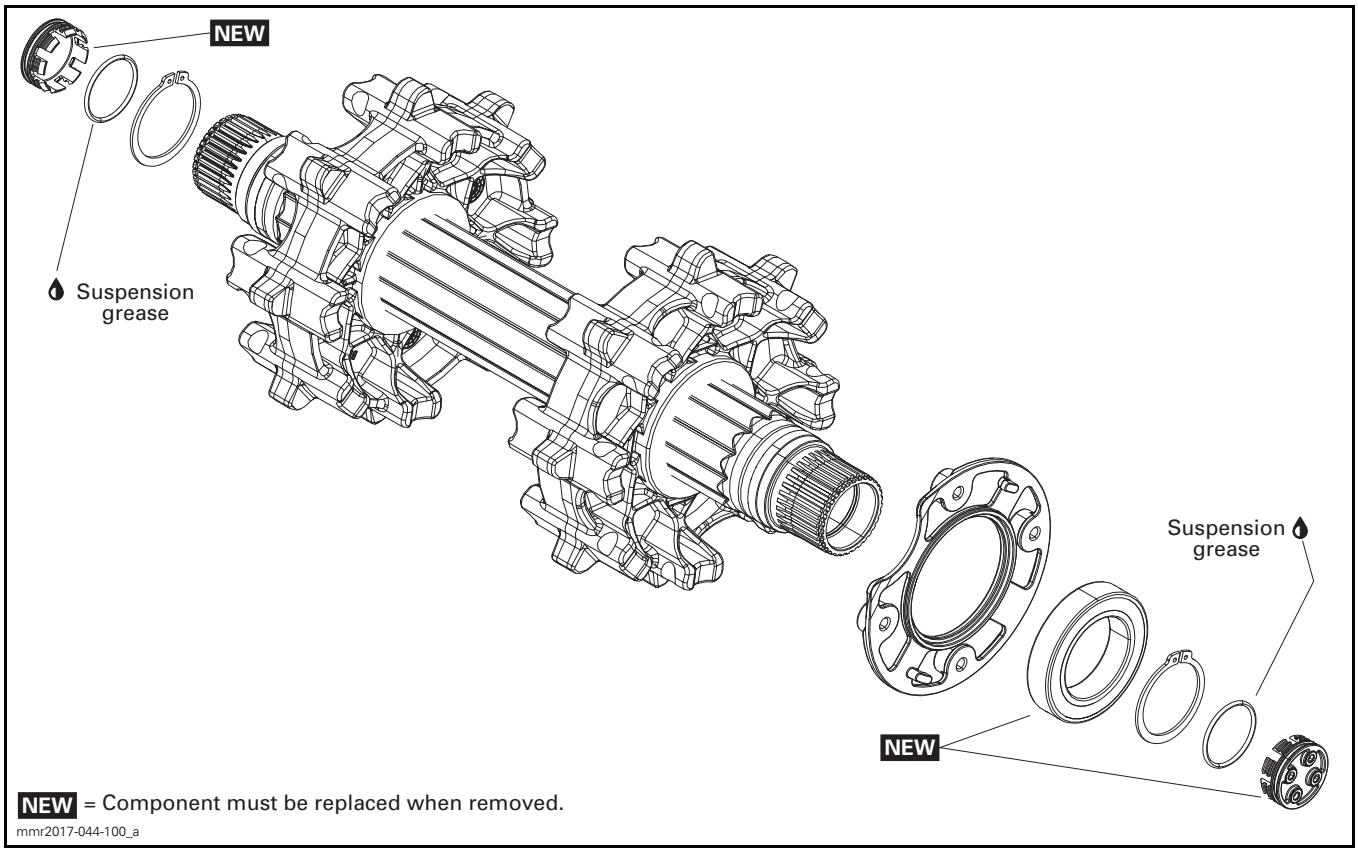

GENERAL

During assembly or installation, use torque values and service products as in the exploded view.

Clean threads before applying a threadlocker. Refer to *SELF-LOCKING FASTENERS* and *LOCTITE APPLICATION* at the beginning of this manual for complete procedure.

⚠ WARNING

Torque wrench tightening specifications must be strictly adhered to.
Locking devices must be replaced with new ones when removed (e.g.: locking tabs, elastic stop nuts, cotter pins, etc.).

PROCEDURES

DRIVE AXLE

Removing the Drive Axle

1. Remove the rear suspension. Refer to *REAR SUSPENSION* subsection.
2. Remove the chaincase cover. Refer to *CHAINCASE* subsection.
3. Release tension from drive chain by unscrewing the tensioner adjustment screw.

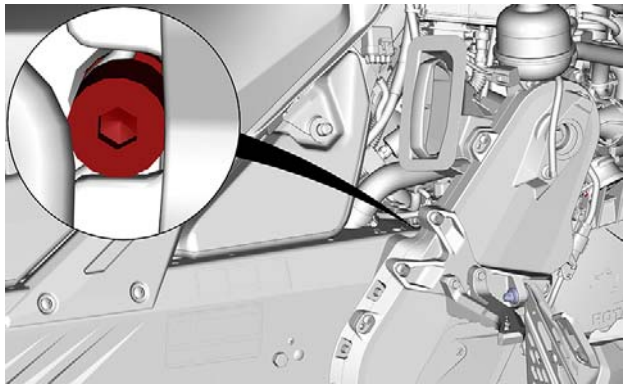

mmr2017-041-002

4. Remove the lower sprocket circlip.

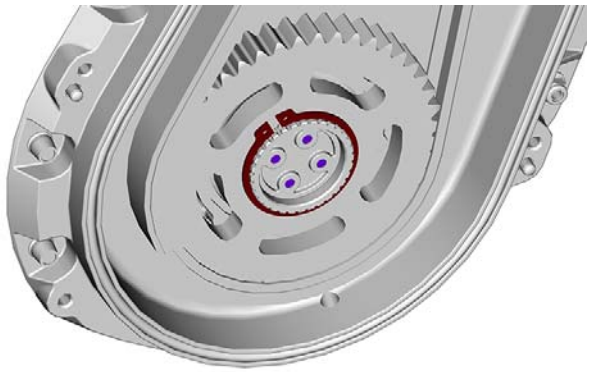

mmr2017-043-009

5. Remove lower gear and drive chain.
6. Remove the caliper. Refer to *BRAKE* subsection.
7. From underneath of vehicle, turn the LH bearing flange counterclockwise to unlock it from frame.

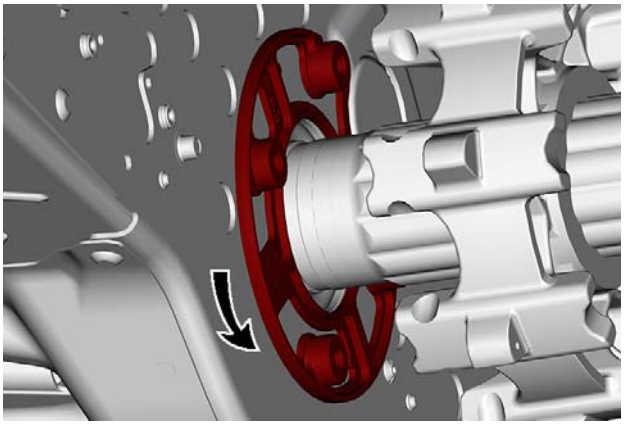

mmr2017-044-001_a

8. Release drive axle sprockets from track and at the same time, push the drive axle towards left side until it comes out of the chaincase.
9. Move the drive axle towards the right side to remove it from vehicle.

Inspecting the Drive Axle

Check if bearing turns smoothly and freely. Replace bearing if necessary.

Check if bearing seals are damaged. Replace bearing if necessary.

Check if the bearing flange is cracked, bent or otherwise damaged. Replace if required.

Replace drive axle if one of the following situations is detected:

– Cracked, worn or damaged drive axle
– Worn or damaged drive axle splines

– Worn or damaged sprockets
– Worn bearing journal.

Removing the Drive Axle Bearing

1. Use a 3-jaw puller to remove the drive axle bearing.

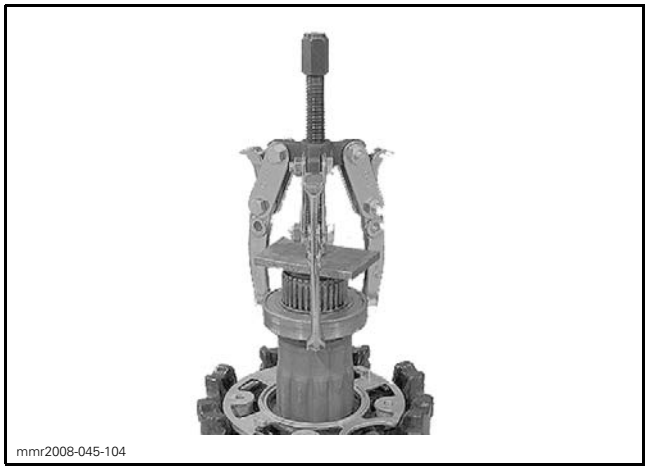
mmr2008-045-104

2. Remove the bearing flange.

Installing the Drive Axle Bearing

1. Install bearing flange on drive axle with locking tabs outwards.

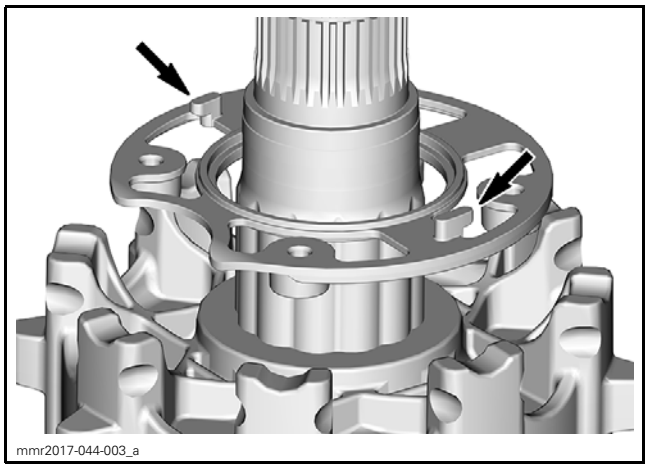
mmr2017-044-003_a

2. Using a press and a suitable pipe, push the bearing onto drive axel.

NOTICE **Always push the bearing by inner race.**

Installing the Drive Axle

The installation is the reverse of the removal procedure. However, pay attention to the following.

Insert drive axle and lock the bearing flange on frame.

NOTE: Ensure bearing flange is properly locked. Tabs must be properly inserted in frame slots.


mmr2017-042-010
VIEW FROM OUTSIDE FRAME

Install the caliper and the disc brake. Refer to *BRAKE* subsection for the specific procedure.

Install all other removed parts. Refer to appropriate subsections.

MAGNETIC CAPS

Removing the Magnetic Cap

1. For the LH cap, remove brake disc protective cover. Refer to *BRAKE* subsection.
2. For the RH cap, remove the chaincase cover. Refer to *CHAINCASE* subsection.
3. By screwing a large screw in the middle of the cap, pry or pull the magnetic cap out of drive axle end.
4. To remove the other cap, push through axle with a long metal bar or wood stick.
5. Discard the magnetic cap.

Installing the Magnetic Cap

1. Apply grease on O-ring.

SERVICE PRODUCT
SYNTHETIC SUSPENSION GREASE (P/N 779163)

2. Insert new magnetic cap in drive axle, Push until caps is secure into groove.

NOTE: Cap should have outside contour face 5 mm (.197 in) inwards.

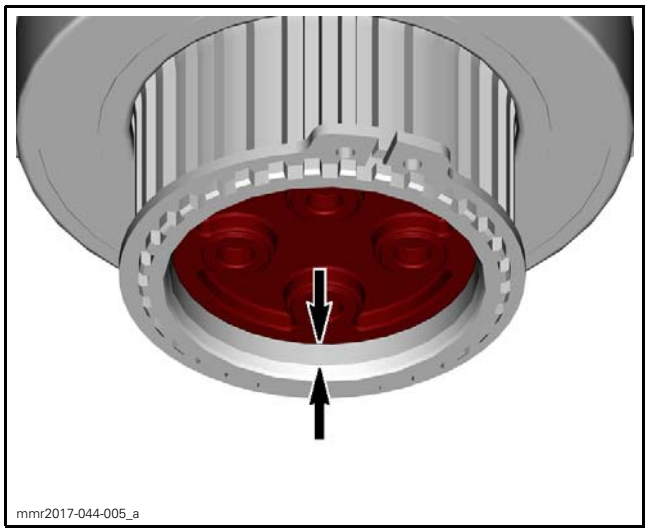

5 MM (.197IN) INWARDS

3. Install all other removed parts.

TRACK

SERVICE TOOLS

Description	Part Number	Page
TENSIOMETER	414 348 200	245
TRACK CLEAT INSTALLER	529 036 044	247

MAINTENANCE

INSPECTING THE TRACK

Visually inspect track for:
- Cuts and abnormal wear
- Broken rods
- Broken or missing track cleats
- Perforations in the track
- Tears in the track (particularly around traction product holes)
- Lugs that are broken or torn off, exposing portion of rods
- Delamination of the rubber
- Missing track guide(s).

If track is damaged or rods are broken, replace track. For damaged or missing cleats, replace by new ones.

⚠ WARNING

Do not operate a snowmobile with a cut, torn or damaged track.

ADJUSTING AND ALIGNING THE TRACK

Track tension and alignment are interrelated. Do not adjust one without checking the other. Track tension procedure must be carried out prior to track alignment.

Verifying the Track Tension

1. Lift rear of vehicle and support it off the ground.
2. Allow rear suspension to fully extend.
3. Use a tensiometer.

REQUIRED TOOL	
TENSIOMETER (P/N 414 348 200)	

4. Set deflection to 3.2 cm (1.26 in) using bottom O-ring.

mmr2009-133-003_b

DEFLECTION SETTING
1. Bottom O-ring

5. Place upper O-ring to 0 kgf (0 lbf).
6. Position the tensiometer on track, halfway between runner ends.
7. Push the tensiometer downwards until bottom O-ring (deflection) is aligned with the bottom of slider shoe.

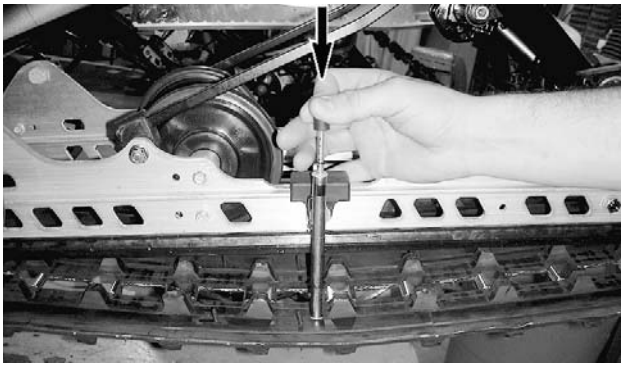
mmr2009-133-001_a

TYPICAL

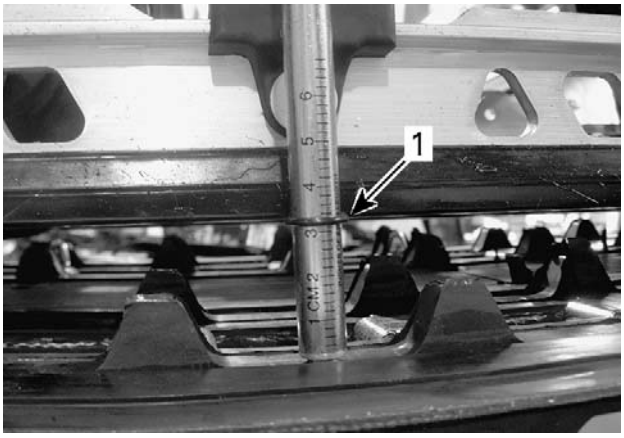

mmr2009-133-002_a

1. Deflection O-ring aligned with slider shoe

8. Read load recorded by the upper O-ring on the tensiometer.

LOAD READING
1. Upper O-ring

Load reading must be as per the following table.

TRACK ADJUSTMENT SPECIFICATION	
Track deflection setting	3.2 cm (1.26 in)
Track load reading	6.0 kgf to 8.5 kgf (13 lbf to 19 lbf)

9. If load reading is not in accordance with the specification, adjust track tension. Refer to *ADJUSTING THE TRACK TENSION*.

NOTICE **Too much tension will result in power loss and excessive stresses on suspension components.**

Adjusting the Track Tension

1. Lift rear of vehicle and support it off the ground.
2. Loosen rear axle
   2.1 Loosen nut on 2 wheel idler system
   2.2 Loosen screw on 3 or 4 wheel idler system
3. Tighten or loosen both adjustment screws to increase or decrease track tension.

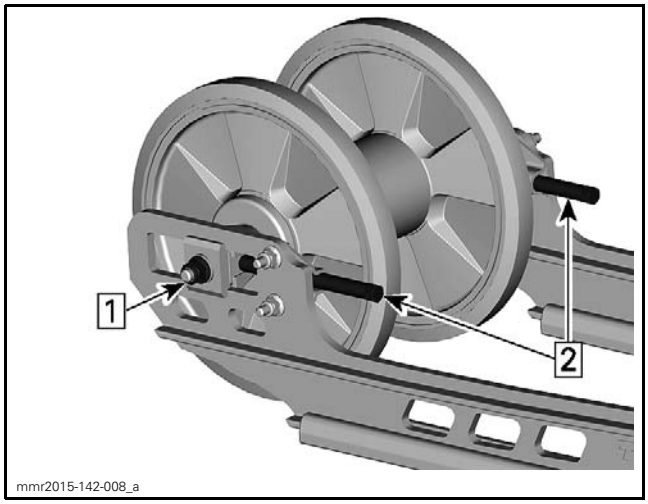

TYPICAL - 2 IDLER WHEELS MODELS
Step 1: Loosen axle nut
Step 2: Tighten or loosen adjustment screws

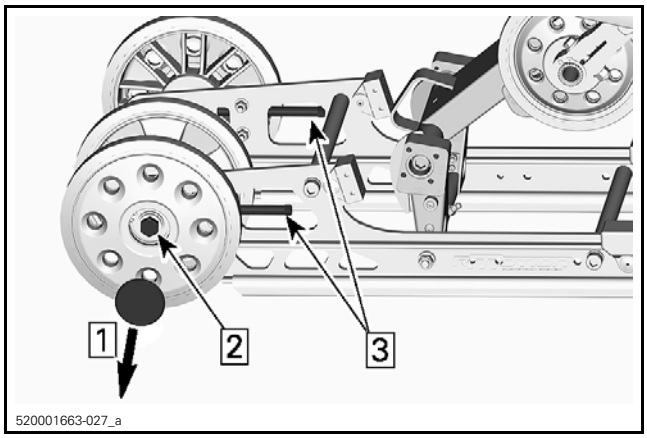

TYPICAL - 3 OR 4 IDLER WHEELS MODELS
Step 1: Remove caps
Step 2: Loosen one the axle screw
Step 3: Tighten or loosen adjustment screws

4. Verify track tension, refer to *VERIFYING THE TRACK TENSION*.
5. Ensure track is properly aligned, refer to *ALIGNING THE TRACK*.

Aligning the Track

⚠ WARNING

Before checking track alignment, ensure that the track is free of all particles which could be thrown out while track is rotating. Keep hands, tools, feet and clothing clear of track. Ensure no one is standing in close proximity to the vehicle. Never rotate at high speed.

1. Lift rear of vehicle and support it off the ground.
2. Start engine and accelerate slightly so that track barely turns. This must be done in a short period of time (10 seconds).
3. Check that the track is well centered; equal distance on both sides between edges of track guides and slider shoes.

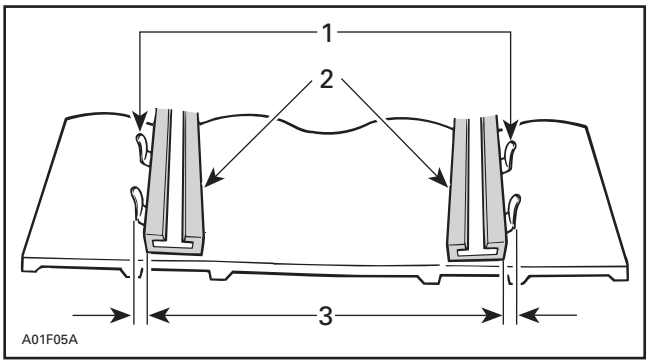

1. Guides
2. Slider shoes
3. Equal distance

4. To correct track alignment:
   4.1 Stop engine.
   4.2 Loosen rear wheel nut.
   4.3 Tighten adjustment screw on side where the slider shoe is the farthest from the track insert guides.

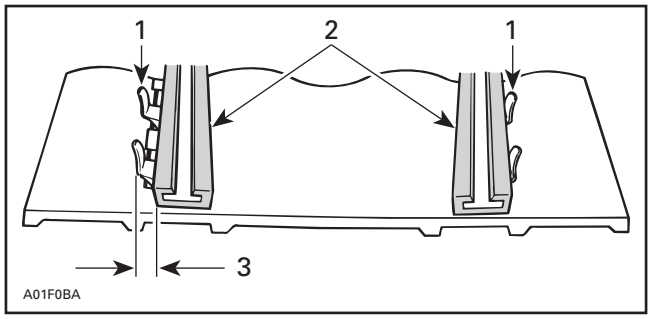

1. Guides
2. Slider shoes
3. Tighten on this side

5. Restart engine.
6. Rotate track slowly and recheck alignment.
7. If satisfactory track alignment is achieved tighten idler wheels axle nut to specification:

TIGHTENING TORQUE	
Rear idler wheel retaining screws **(3 and 4 idler wheels system)**	48 N•m ± 6 N•m (35 lbf•ft ± 4 lbf•ft)
Rear idler wheel retaining nut and screw **(2 idler wheels system)**	24.5 N•m ± 3.5 N•m (18 lbf•ft ± 3 lbf•ft)

PROCEDURES

TRACK

Replacing a Track Cleat

Raise rear of vehicle off the ground.

Lift snow guard.

Rotate track to expose a cleat to be replaced.

Remove cleat from track using plastic hammer and a big screwdriver.

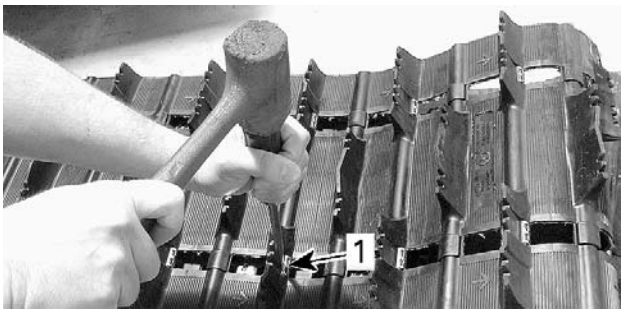

TYPICAL
1. Cleat

Place new cleat in position on the track.

Secure cleat with the cleat installer.

REQUIRED TOOL	
TRACK CLEAT INSTALLER (P/N 529 036 044)	

Bend cleat and push tabs into rubber.

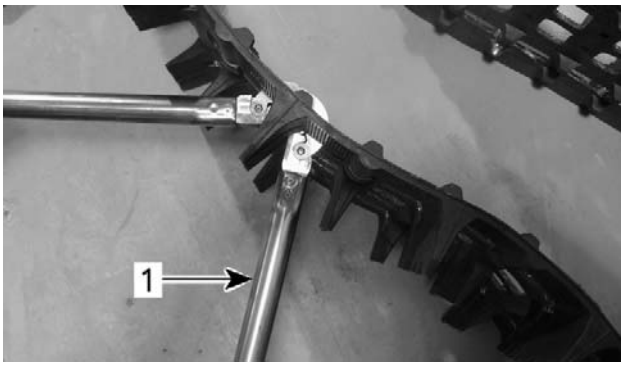

TYPICAL
1. Narrow-cleat installer

Reopen narrow-cleat installer.

Position cleat tabs on open end of tool.

Squeeze tabs until they are indented in rubber.

Removing the Track

Remove rear suspension from vehicle. Refer to *REAR SUSPENSION*.

Remove drive axle. Refer to *DRIVE AXLE* subsection.

Remove track.

Installing the Track

Reverse the removal procedure.

NOTE: When installing the track, respect rotation direction indicated by an arrow on track thread.

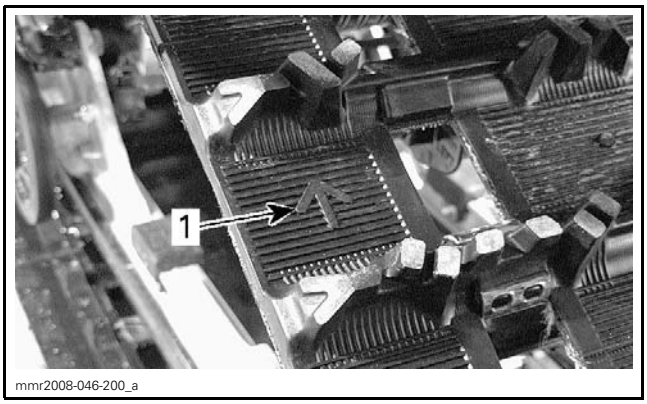

1. Arrow pointing forwards

Adjusting and aligning the Track

Refer to *MAINTENANCE* in this subsection.

SUSPENSION ADJUSTMENTS

GENERAL

NOTICE **Whenever adjusting rear suspension, check track tension and adjust if necessary.**

ADJUSTMENT

Choice of suspension adjustments vary with vehicle load, personal preference, riding speed and terrain condition.

The best way to set up the suspension, is to start from factory settings, then customize each adjustment one at a time.

Front and rear adjustments are interrelated. It may be necessary to readjust the rear shock absorbers after adjusting front shock absorbers for instance.

Test run the vehicle under the same conditions; trail, speed, load, etc. Change one adjustment and retest. Proceed methodically until you are satisfied.

Following are guidelines to fine-tune suspension.

STOPPER STRAP

Stopper strap length has an effect on the amount of weight the center spring has to carry especially during acceleration, therefore on the front end uplift.

Stopper strap length also has an effect on center spring travel.

ACTION	RESULT
Increasing stopper strap length	Lighter ski pressure under acceleration
	More center spring travel
	More bump absorption capability
Decreasing stopper strap length	Heavier ski pressure under acceleration
	Less center spring travel
	Less bump absorption capability

NOTE: Stopper strap could be set to position 1, 2, 3, 4 and 5. Below are illustrations for position 1, 2, 3. Smaller numbers correspond to a longer strap setting.

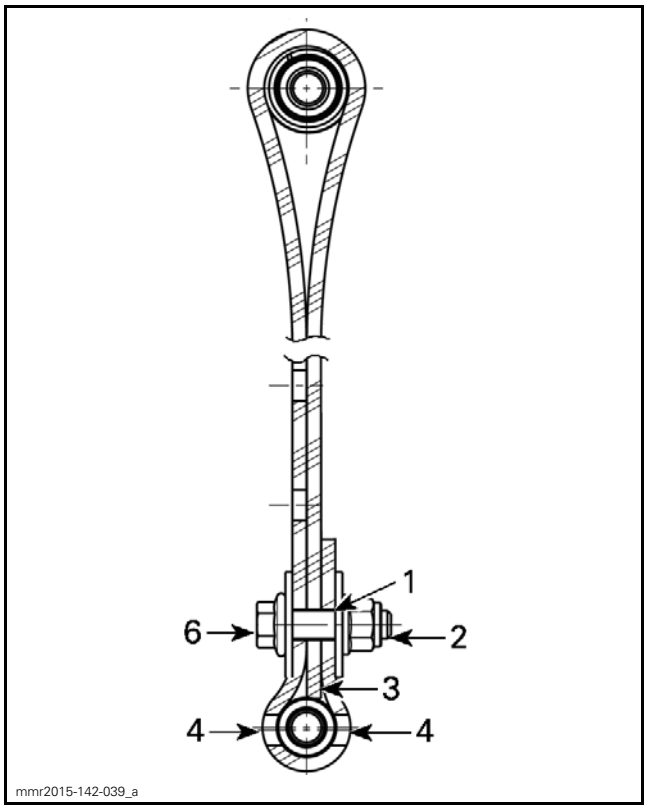

STOPPER STRAP POSITION 1 (1ST HOLE, LONGEST)
1. 1st hole from end
2. Towards rear
3. Tip of strap touching strap axis
4. Two holes left open between screw head and nut
5. Towards front

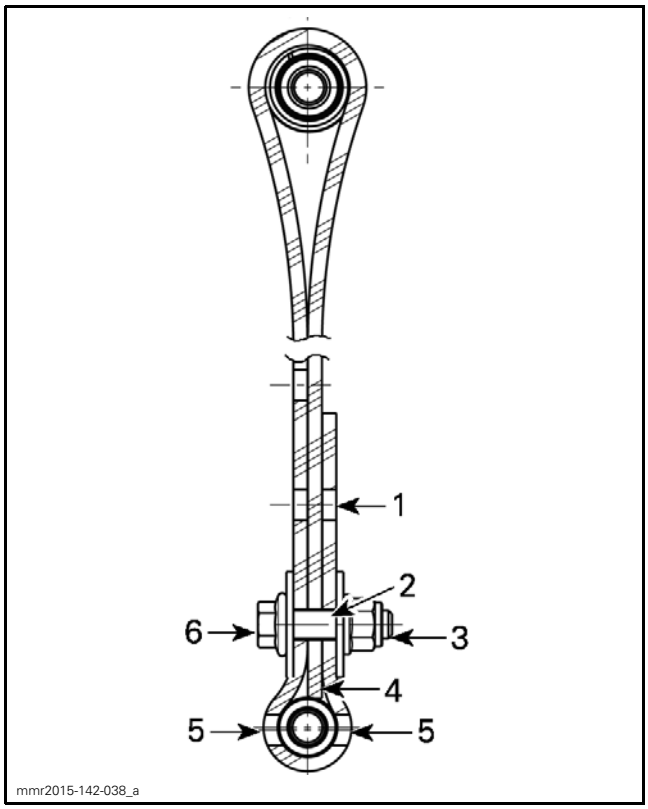

STOPPER STRAP POSITION 2 (2ND HOLE)
1. *Free hole*
2. *2nd hole from end*
3. *Towards rear*
4. *Tip of strap touching strap axis*
5. *Two holes left open between screw head and nut*
6. *Towards front*

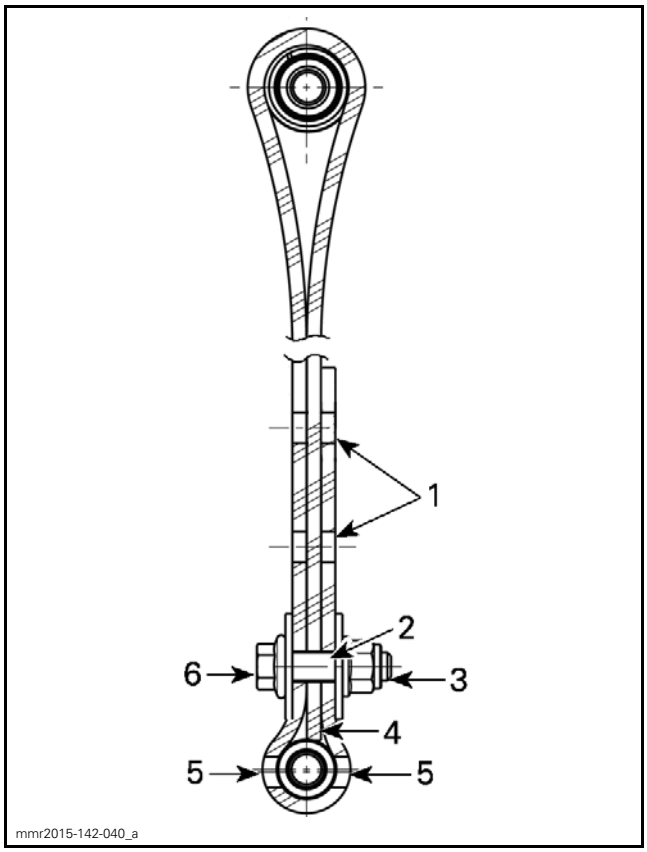

STOPPER STRAP POSITION 3 (3RD HOLE)
1. *Free holes*
2. *3rd hole from end*
3. *Towards rear*
4. *Tip of strap touching strap axis*
5. *Two holes left open between screw head and nut*
6. *Towards front*

NOTE: Always install stopper strap bolt as close as possible to the lower shaft.

When operating the snowmobile in deep snow or hill climbing, it may be necessary to vary stopper strap length and/or riding position, to change the angle at which the track rides on the snow. Operator's familiarity with the various adjustments as well as snow conditions will dictate the most efficient combination.

Generally, a longer stopper strap setting gives better performance on a flat landscape and a shorter setting will improve handling in steep hill climbing and deep snow conditions.

STOPPER STRAP SETTING	
POSITION	USE
1	Not used
2	Boon docking: – Better boon docking manoeuvrability – Better bump absorption – Better deep snow starts (forward and reverse)

STOPPER STRAP SETTING	
POSITION	USE
3	Factory setting: Best overall setting (General use)
4	Hill climb: – Better track attack angle for hill climbing
5	Steep hill climb: – Better track attack angle for hill climbing – Less transfer – Lower ride height

SPRING PRELOAD

Front Springs

Front springs preload has an effect on:
– front suspension firmness
– The steering behavior.

ACTION	RESULT
Increasing preload	Firmer front suspension
	Higher front end
	More precise steering
	More bump absorption capability
Decreasing preload	Softer front suspension
	Lower front end
	Lighter steering
	Less bump absorption capability

⚠ WARNING

Adjust both springs to the same preload. Uneven adjustment can cause poor handling and loss of stability, and/or control, and increase the risk of an accident.

Cam Type Adjuster

Using the suspension adjustment tool (included in the vehicle tool kit), turn the cam to increase or decrease spring preload.

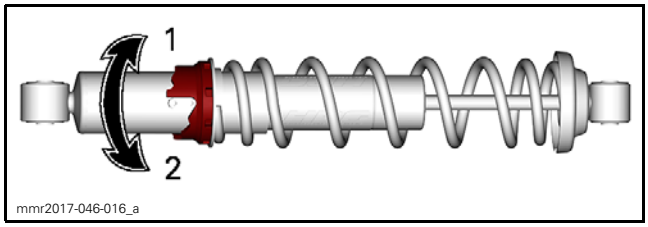

1. *Increase preload*
2. *Decrease preload*

Ring Type Adjuster

Grab and turn the spring to increase or decrease spring preload.

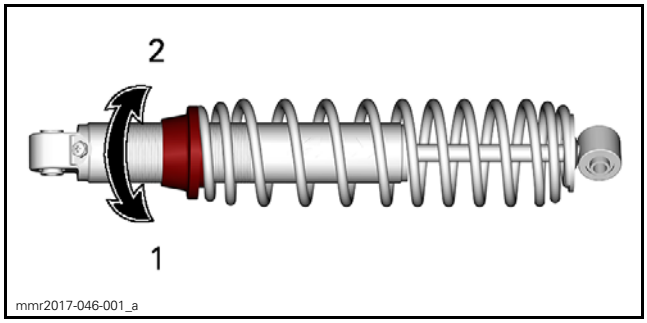

1. *Increase preload*
2. *Decrease preload*

Center Spring

Center spring preload has an effect on steering effort, handling and bump absorption.

Also, since center spring preload adjustment puts more or less pressure on the front of the track, it has an effect on the performance in deep snow.

ACTION	RESULT
Increasing preload	Lighter steering
	More bump absorption capability
	Better deep snow starts
	Better deep snow performance and handling
Decreasing preload	Heavier steering
	Less bump absorption capability
	Better trail handling

Cam Type Adjuster

Using the suspension adjustment tool (included in the vehicle tool kit), turn the cam to increase or decrease spring preload.

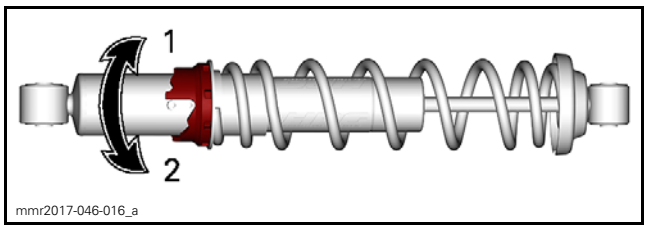

1. *Increase preload*
2. *Decrease preload*

Ring Type Adjuster

Grab and turn the spring to increase or decrease spring preload.

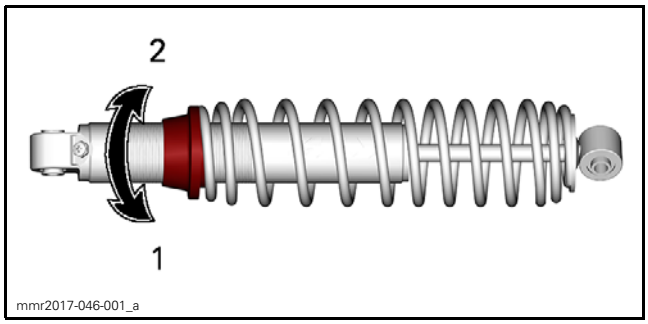

1. Increase preload
2. Decrease preload

Rear Springs

Rear spring preload has an effect on comfort, ride height and load compensation.

Also, adjusting rear spring preload shifts more or less weight to the snowmobile front end. As a result, more or less weight is applied to the skis. This has an effect on performance in deep snow, steering effort and handling.

Slight suspension bottoming occurring under the worst riding conditions indicates a good choice of spring preload.

ACTION	RESULT
Increasing preload	Firmer rear suspension
	Higher rear end
	More bump absorption capability
	Heavier steering
Decreasing preload	Softer rear suspension
	Lower rear end
	Less bump absorption capability
	Lighter steering
	Better deep snow performance and handling

Refer to the following to determine if preload is correct.

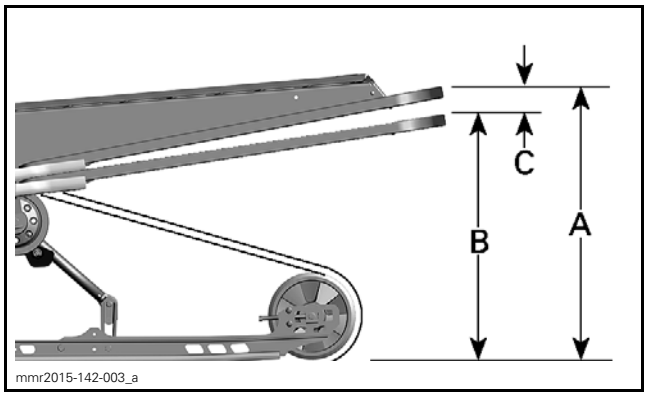

PROPER ADJUSTMENT
A. Suspension fully extended
B. Suspension has collapsed with operator, passenger and load added
C. Distance between dimension "A" and "B", see table below

SC-5 / SC-5M / rMOTION	
"C"	WHAT TO DO
50 mm to 75 mm (2 in to 3 in)	No adjustment required
More than 75 mm (3 in)	Adjusted too soft. Increase preload
Less than 50 mm (2 in)	Adjusted too firm. Decrease preload

SC-5U / cMOTION / tMOTION	
"C"	WHAT TO DO
65 mm to 100 mm (2.5 in to 4 in)	No adjustment required
More than 100 mm (4 in)	Adjusted too soft. Increase preload
Less than 65 mm (2.5 in)	Adjusted too firm. Decrease preload

If the specification is unattainable with the original springs, refer to the applicable *SPRING CHART* bulletin for other available springs.

NOTICE **To increase spring preload, always turn the left side adjustment cam in a clockwise direction, and the right side cam in a counter-clockwise direction.**

CAUTION **Never set preload cams directly from position 5 to 1 or directly from position 1 to 5.**

The adjustment cams have 5 different settings, 1 being the softest.

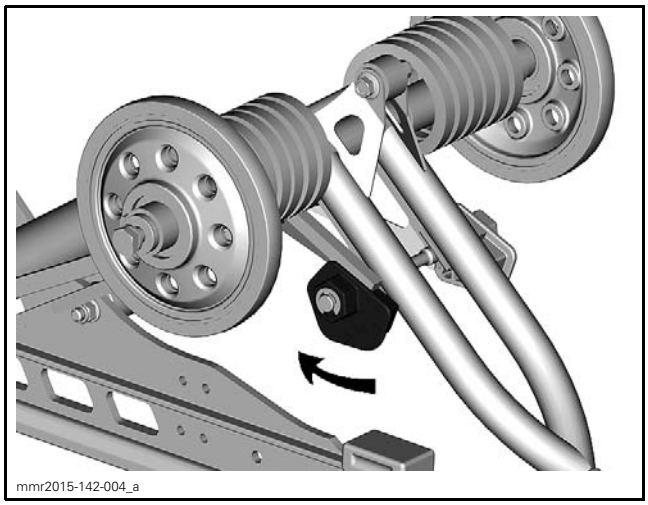

TYPICAL - EXCEPT QUICK ADJUST SYSTEM

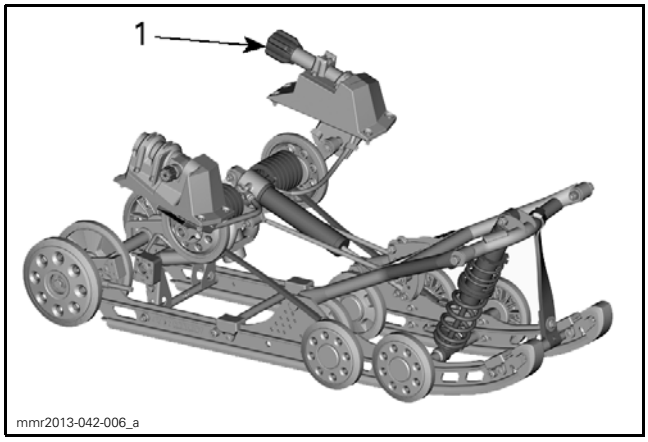

rMOTION WITH QUICK ADJUST SYSTEM
1. LH side knob to adjust spring preload

Dampers

Compression Damping (KYB PRO Series)

NOTE: Both low and high speed compression damping are adjusted simultaneously.

Low speed compression damping controls how the shock absorber reacts to a low suspension velocity (slow compression strokes, in most cases when riding at lower speeds).

High speed compression damping controls how the shock absorber reacts to a high suspension velocity (quick compression strokes, in most cases when riding at higher speeds).

ACTION	RESULT
Increasing compression damping force	Firmer compression damping
Decreasing compression damping force	Softer compression damping

To adjust, turn compression damping adjustment knob clockwise to increase compression damping force and counterclockwise to decrease compression damping force.

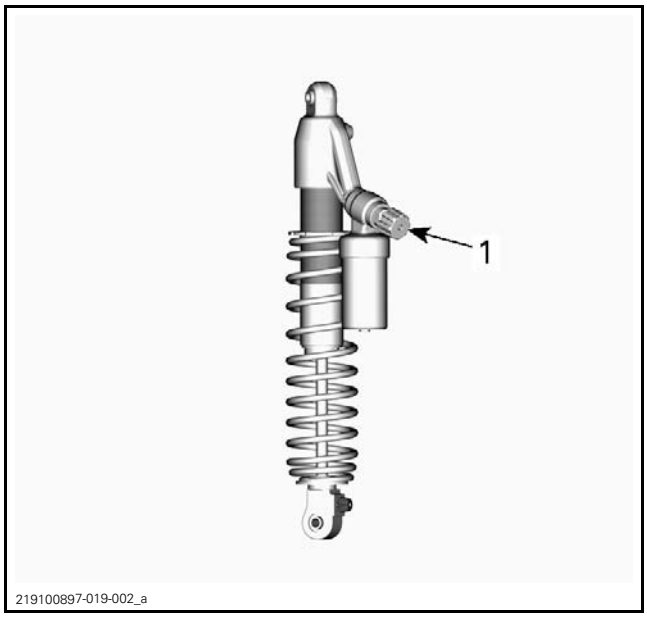

TYPICAL - EXCEPT QUICK ADJUST SYSTEM
1. Compression damping adjustment knob

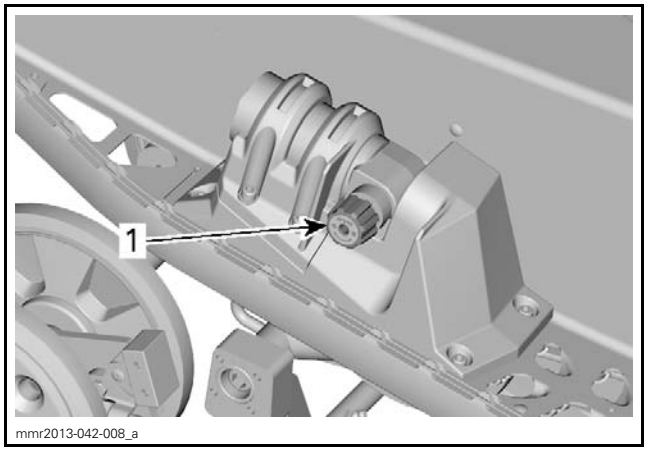

rMOTION WITH QUICK ADJUST SYSTEM
1. Knob to adjust low/high speed compression damping

Rebound Damping (KYB PRO Series)

Rebound damping controls how the shock absorber restrains the extension stroke.

ACTION	RESULT
Increasing rebound damping force	Firmer rebound damping (slower extension speed)
Decreasing rebound damping force	Softer rebound damping (faster extension speed)

NOTE: In repetitive shorts small bumps (ripple), it is recommended to use a lower rebound damping setting.

To adjust, turn rebound adjustment knob clockwise to increase rebound damping force and counterclockwise to decrease rebound damping force.

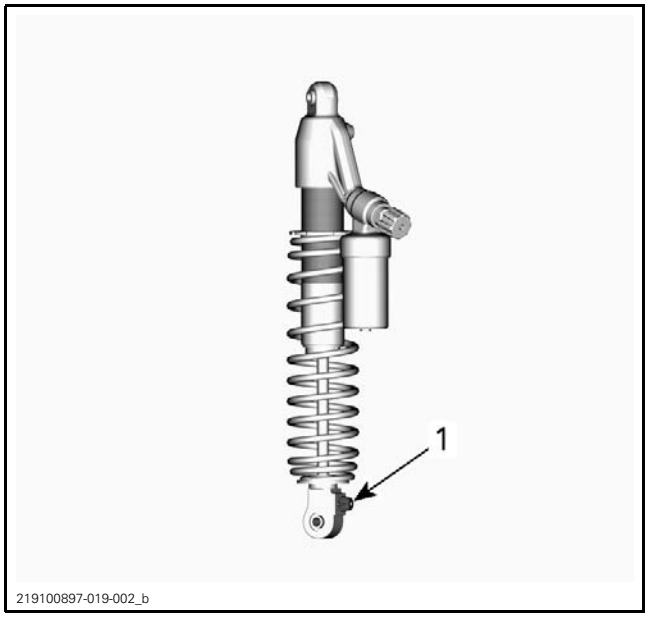

TYPICAL - EXCEPT QUICK ADJUST SYSTEM
1. Rebound damping adjustment knob

Rear Shock Mounting Position

Two rear shock mounting positions are available: high performance and sport.

Factory setting is set to lowest mounting position (high performance) which will suit most operators riding preferences. The sport mounting hole adjustment allows for another range of softer settings, but all other rear suspension adjustments should be performed before changing the rear shock mounting position.

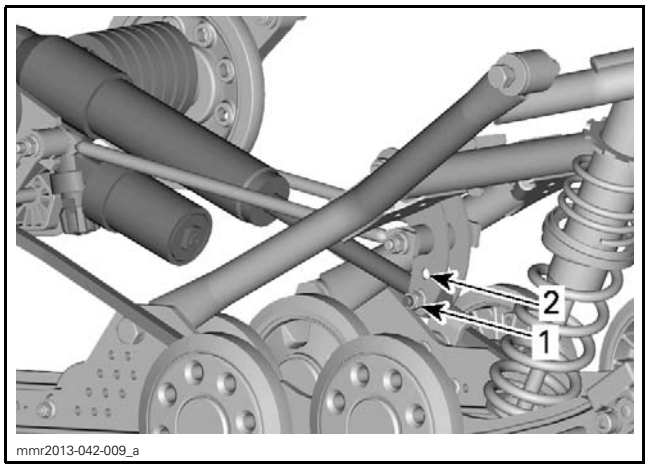

REAR SHOCK MOUNTING POSITION
1. High performance position
2. Sport position

Coupling Blocks

Coupling blocks adjustment has an effect on vehicle handling during acceleration only.

NOTE: A high coupling block setting will reduce both comfort and transfer under acceleration.

To adjust, push on release button under cam and turn coupling block to the desired setting.

⚠ WARNING

Both blocks must be set at the same position. Otherwise vehicle behavior may be unpredictable and suspension may become warped.

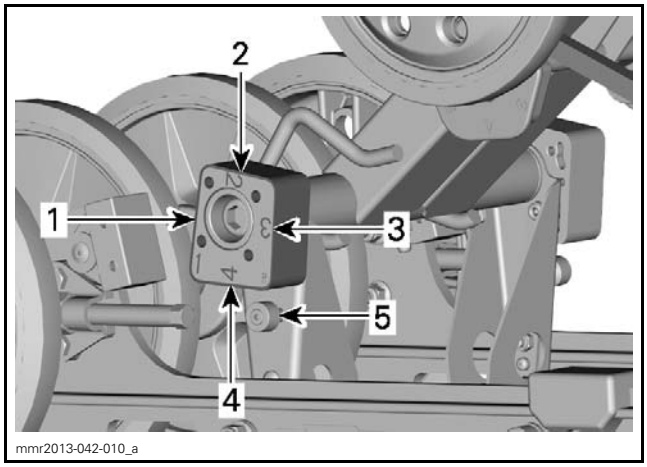

COUPLING BLOCK — RIGHT SIDE VIEW
("R" — RIGHT EMBOSSED ON BLOCK)
1. Position 1 (minimum)
2. Position 2
3. Position 3
4. Position 4 (maximum)
5. Release button

Coupling Blocks Setting

POSITION	USE
1	More ski lift during acceleration - and best comfort
2	Intermediate setting
3	Intermediate setting
4	Less ski lift during acceleration - and some comfort loss

FRONT SUSPENSION

SERVICE TOOLS

Description	Part Number	Page
BALL JOINT EXTRACTOR	529 035 827	259
BALL JOINT INSTALLER SUPPORT	529 036 398	262
BALL JOINT INSTALLER	529 036 399	262
BALL JOINT REMOVER SUPPORT	529 036 400	262
SPRING COMPRESSOR	529 036 184	258
SUSPENSION ARM SUPPORT	529 035 637	260

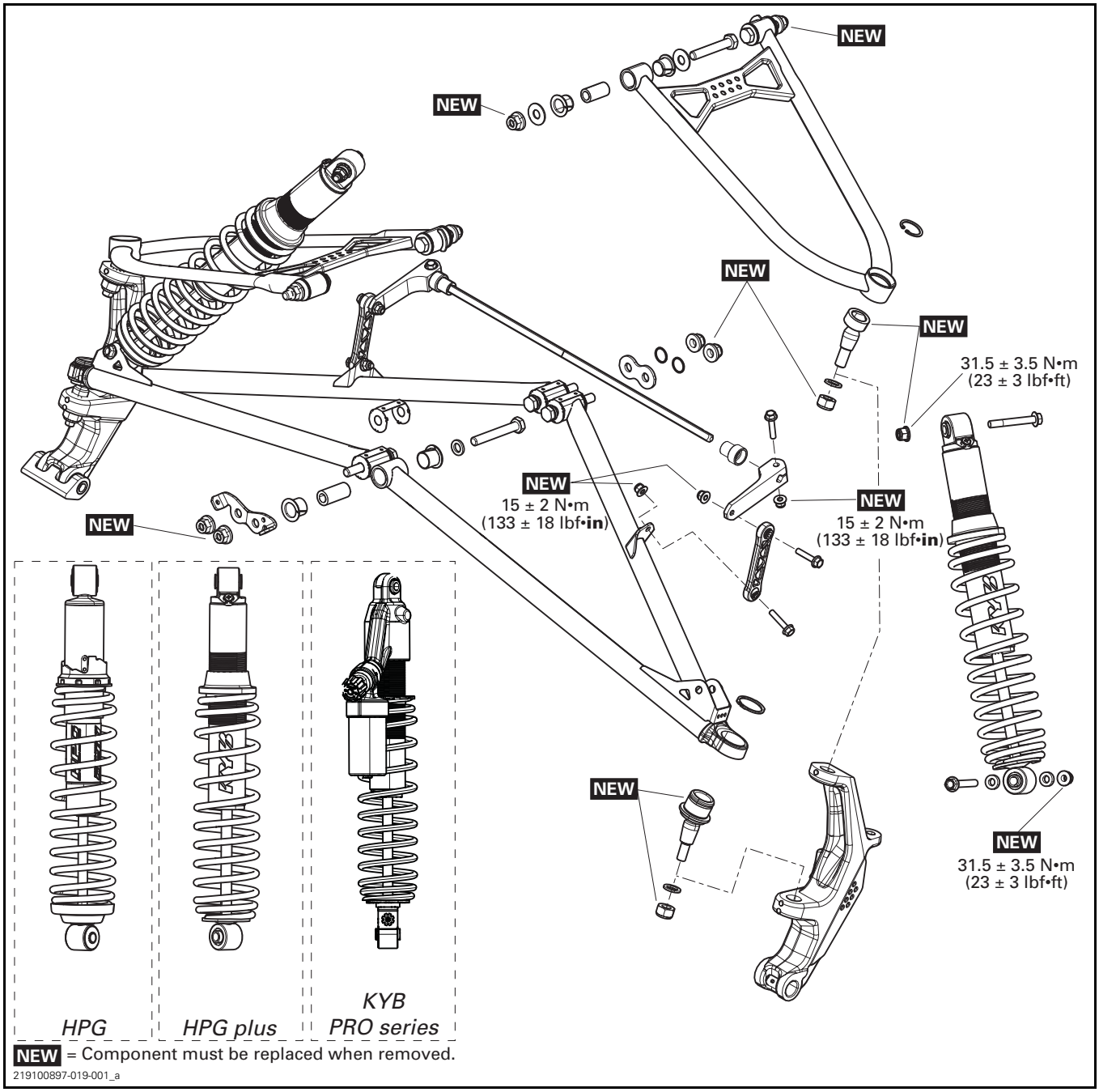

GENERAL

The procedure explained below is the same for the RH and LH sides unless otherwise noted.

During assembly/installation, use torque values and service products as in the exploded view.

Clean threads before applying a threadlocker. Refer to *SELF-LOCKING FASTENERS* and *LOCTITE APPLICATION* at the beginning of this manual for complete procedure.

⚠ WARNING

Torque wrench tightening specifications must be strictly adhered to.
Locking devices (e.g.: locking tabs, elastic stop nuts, cotter pins, etc.) must be replaced with new ones.

Check for loose, bent, worn out, rusted or otherwise damaged components. Replace the faulty components.

ADJUSTMENT

SPRINGS

Front spring preload has an effect on front suspension firmness.

Front spring preload also has an effect on the steering behavior.

ACTION	RESULT
Increasing preload	Firmer front suspension
	Higher front end
	More precise steering
	More bump absorption capability
Decreasing preload	Softer front suspension
	Lower front end
	Lighter steering
	Less bump absorption capability

⚠ WARNING

Adjust both springs to the same preload. Uneven adjustment can cause poor handling and loss of stability, and/or control, and increase the risk of an accident.

Spring Preload Adjustment

Cam Type Adjustment

Using the suspension adjustment tool (included in the vehicle tool kit), turn the cam to increase or decrease spring preload.

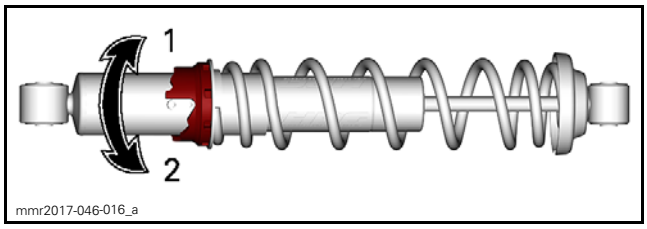

1. *Increase preload*
2. *Decrease preload*

Ring Type Adjustment

Grab and turn the spring to increase or decrease spring preload.

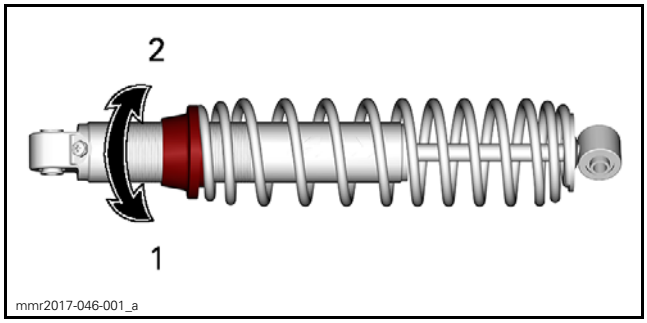

1. *Increase preload*
2. *Decrease preload*

DAMPERS

Compression Damping (KYB PRO Series)

NOTE: Both low and high speed compression damping are adjusted simultaneously.

Low speed compression damping controls how the shock absorber reacts to a low suspension velocity (slow compression strokes, in most cases when riding at lower speeds).

High speed compression damping controls how the shock absorber reacts to a high suspension velocity (quick compression strokes, in most cases when riding at higher speeds).

ACTION	RESULT
Increasing compression damping force	Firmer compression damping
Decreasing compression damping force	Softer compression damping

To adjust, turn compression damping adjustment knob clockwise to increase compression damping force and counterclockwise to decrease compression damping force.

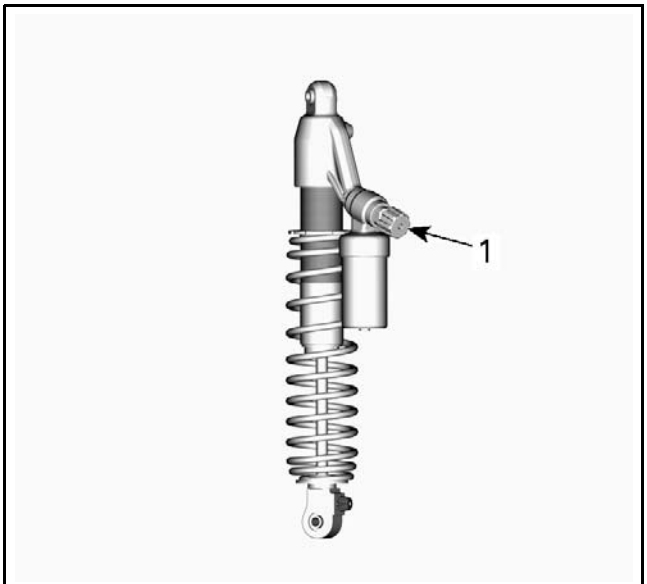

219100897-019-002_a

1. Compression damping adjustment knob

Rebound Damping (KYB PRO Series)

Rebound damping controls how the shock absorber restrains the extension stroke.

ACTION	RESULT
Increasing rebound damping force	Firmer rebound damping (slower extension speed)
Decreasing rebound damping force	Softer rebound damping (faster extension speed)

NOTE: In repetitive shorts small bumps (ripple), it is recommended to use a lower rebound damping setting.

To adjust, turn rebound adjustment knob clockwise to increase rebound damping force and counterclockwise to decrease rebound damping force.

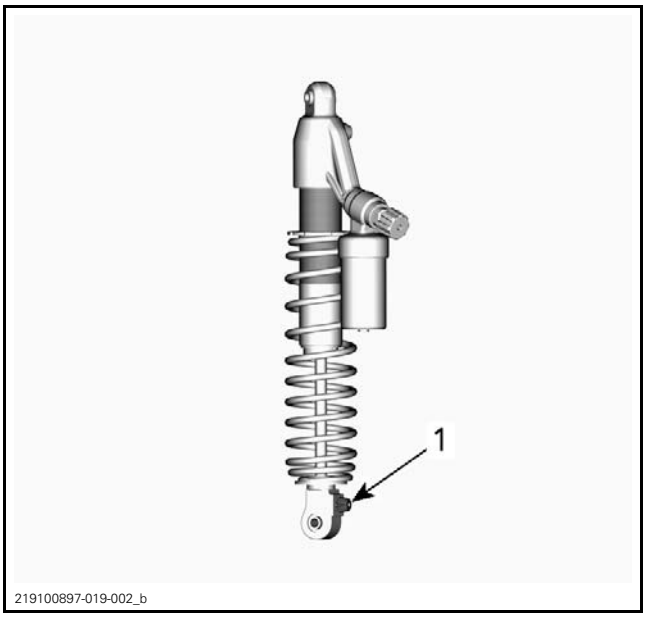

219100897-019-002_b

1. Rebound damping adjustment knob

PROCEDURES

SHOCK ABSORBER

Removing the Shock Absorber

1. Remove the side panel. Refer to *BODY* subsection.
2. Lift the front of vehicle until skis are off the ground.
3. Remove the shock absorber upper bolt.

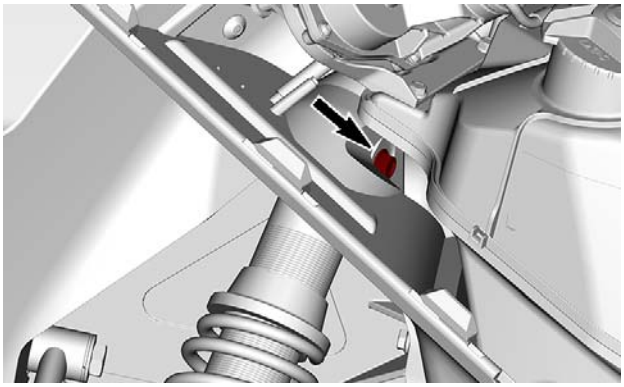

mmr2017-046-002_a

4. Remove the shock absorber lower bolt, nut, and spacers.

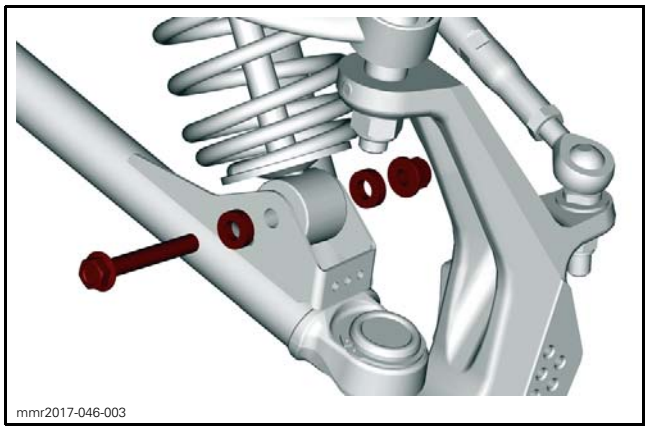
mmr2017-046-003

5. Remove the shock absorber.

Inspecting the Shock Absorber

Refer to *REAR SUSPENSION (RMOTION)* subsection.

Installing the Shock Absorber

For installation, reverse the removal procedure, however, pay attention to the following.

Install upper bolt first while shock absorber lower mount is not engaged into the bracket.

Install shock absorber with body up and valve (if equipped) towards outside.

Make sure to install both of the lower spacers.

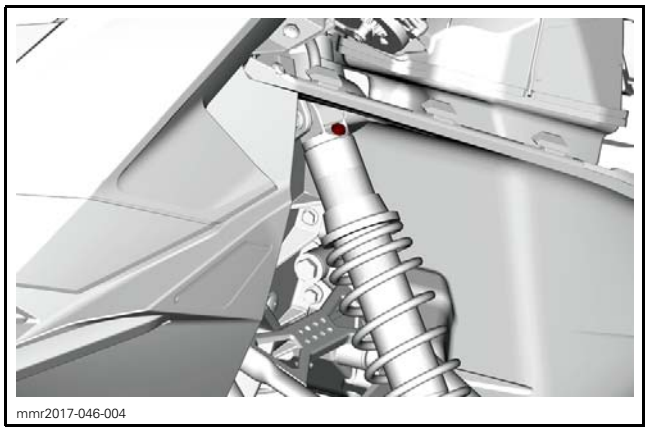
mmr2017-046-004

TIGHTENING TORQUE	
Front shock absorber retaining nuts	31.5 N•m ± 3.5 N•m (23 lbf•ft ± 3 lbf•ft)

SPRING

Removing the Spring

1. Secure the SPRING COMPRESSOR (P/N 529 036 184) in a vise.

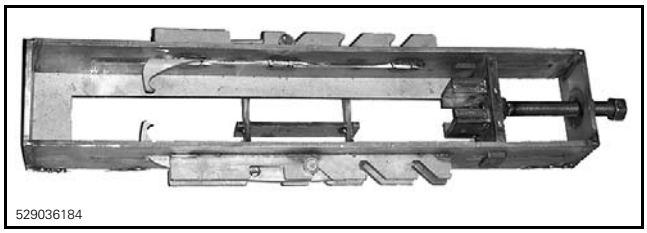
529036184

SPRING COMPRESSOR

2. Position the shock absorber in the tool and install the spring compressor hooks.

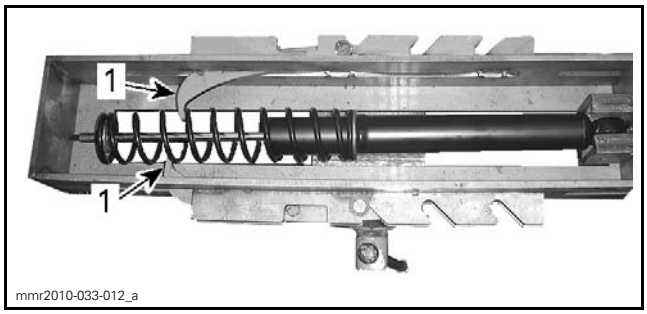

mmr2010-033-012_a

TYPICAL
1. Spring compressor hooks

3. Tighten the spring compressor tool screw until the spring is sufficiently compressed to remove spring stopper.
4. Release the spring compressor tool screw.
5. Remove spring from shock absorber.

Inspecting the Spring

Inspect spring for apparent damage, any defect such as scratches or rust can affect the spring durability.

When the adjustment is at the lowest preload, ensure that adjustment cam and spring stopper are not loose. They must be under spring pressure. Otherwise, the spring stopper might fall off.

Installing the Spring

For installation, reverse the removal procedure.

UPPER SUSPENSION ARM

Inspecting the Upper Suspension Arm

1. Check suspension arm for distortion or damage. Replace if necessary.
2. Lift the front of vehicle until skis are off the ground.
3. Move suspension arm from side to side.
4. Lower vehicle to the ground.
5. Move suspension up and down.
6. There should be no noticeable looseness. Replace bushings and/or sleeves if necessary.

NOTE: A play of 2 mm (.079 in) is acceptable when the suspension arm is moved forward and backward.

7. Check sleeves inside suspension arm attachments for wear or damage.

Removing the Upper Suspension Arm

1. Lift the front of vehicle until skis are off the ground.
2. Remove muffler and tuned pipe. Refer to *EXHAUST SYSTEM* subsection.
3. Remove shock absorber. See procedure in *REMOVING THE SHOCK ABSORBER* in this subsection.
4. Remove the upper suspension arm bolts.

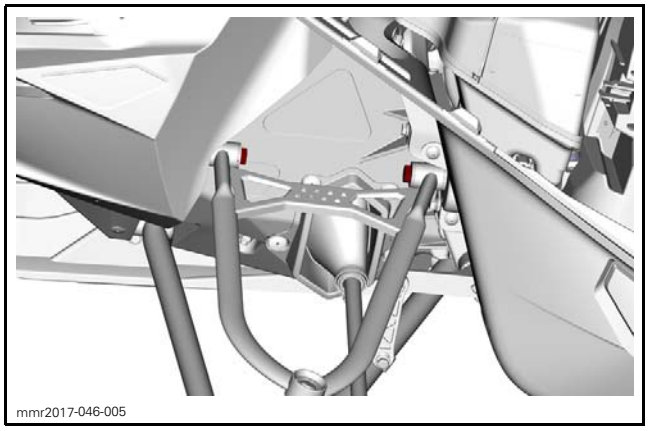
mmr2017-046-005

5. Detach ball joint from ski leg as follows.
   5.1 Remove nut securing ball joint to ski leg.

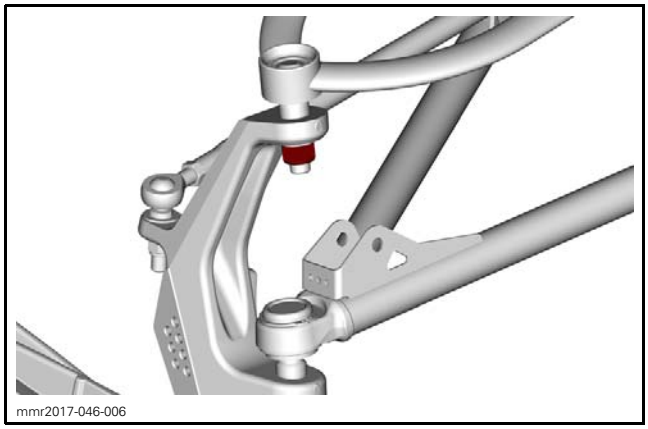
mmr2017-046-006

   5.2 Use the extractor to detach ball joint from ski leg.

REQUIRED TOOL	
BALL JOINT EXTRACTOR (P/N 529 035 827)	

6. Remove upper suspension arm.

Installing the Upper Suspension Arm

The installation is the reverse of the removal procedure. However, pay attention to the following.

NOTICE **Make sure not to invert LH and RH arm.**

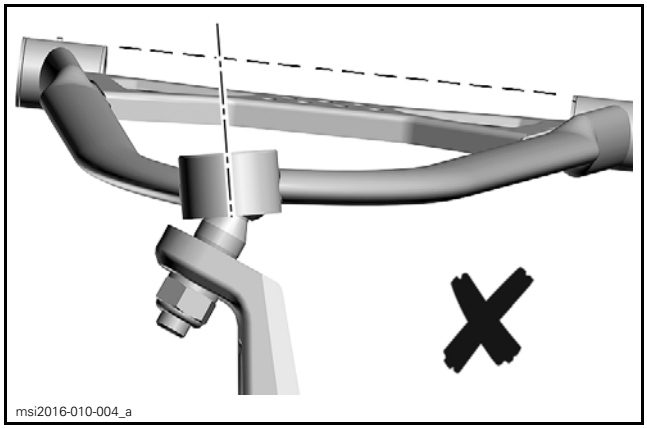
msi2016-010-004_a

RH UPPER ARM INSTALLED ON LH SIDE

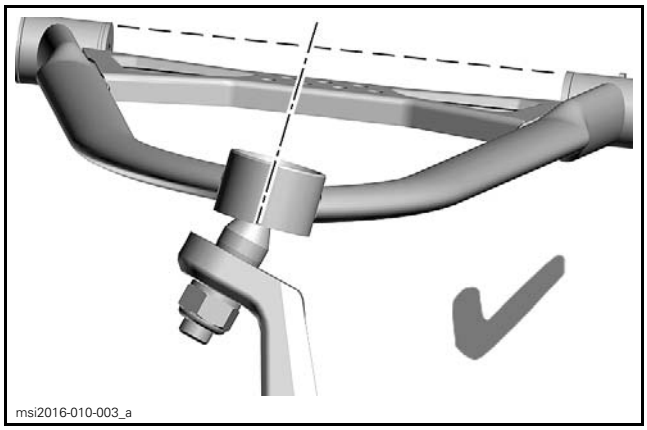
msi2016-010-003_a

LH UPPER ARM INSTALLED ON LH SIDE

UPPER BALL JOINT

Inspecting the Upper Ball Joint

Check both upper ball joints for damage, pitting, looseness and roughness. If so, replace with a new one.

Removing the Upper Ball Joint

1. Remove the *UPPER SUSPENSION ARM*, see procedure in this subsection.
2. Remove circlip securing ball joint to suspension arm.

3. Press ball joint out of the suspension arm.

REQUIRED TOOLS	
Shop press	
SUSPENSION ARM SUPPORT (P/N 529 035 637)	
Suitable socket	

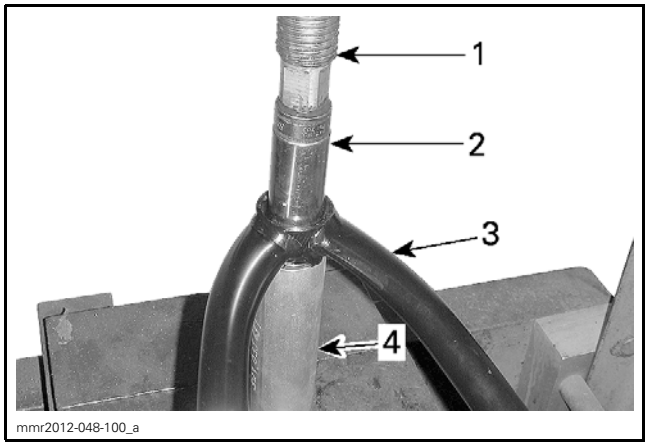

TYPICAL
1. *Press rod*
2. *Socket*
3. *Suspension arm*
4. *Suspension arm support*

Installing the Upper Ball Joint

The installation is the reverse of the removal procedure. However, pay attention to the following.

1. Press ball joint into the suspension arm.

REQUIRED TOOLS	
Shop press	
SUSPENSION ARM SUPPORT (P/N 529 035 637)	
Suitable socket	

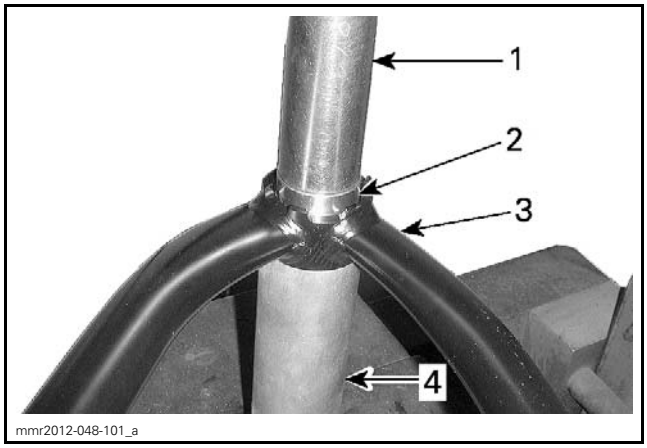

TYPICAL
1. *Socket*
2. *Ball joint*
3. *Suspension arm*
4. *Suspension arm support (P/N 529 035 637)*

2. Reinstall the circlip. If it seems loose, replace it with a new one.

LOWER SUSPENSION ARM

Inspecting the Lower Suspension Arm

1. Check suspension arm for distortion or damage. Replace if necessary.
2. Lift the front of vehicle until skis are off the ground.
3. Detach shock absorber and stabilizer bar link from lower suspension arm.
4. Move suspension arm from side to side.
5. Lower vehicle to the ground.
6. Move suspension up and down.
7. There should be no noticeable loose. Replace bushings and/or sleeves if necessary.

NOTE: A play of 2 mm (.079 in) is acceptable when the suspension arm is moved forward and backward.

8. Check sleeves inside suspension arm attachments for wear or damage.

Removing the Lower Suspension Arm

1. Lift the front of vehicle until skis are off the ground.

2. Remove the tune pipe. Refer to *EXHAUST SYSTEM* subsection.
3. Remove shock absorber lower bolt.
4. Detach stabilizer bar link from lower suspension arm. Refer to *STABILIZER BAR* further in this subsection.
5. Remove lower ball joint nut.

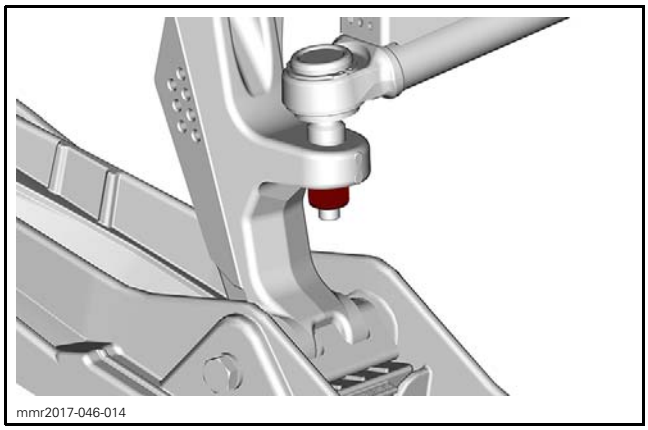
mmr2017-046-014

6. Using a suitable ball joint remover, detach lower ball joint from ski leg.
7. Remove suspension arm screws from inside the vehicle.

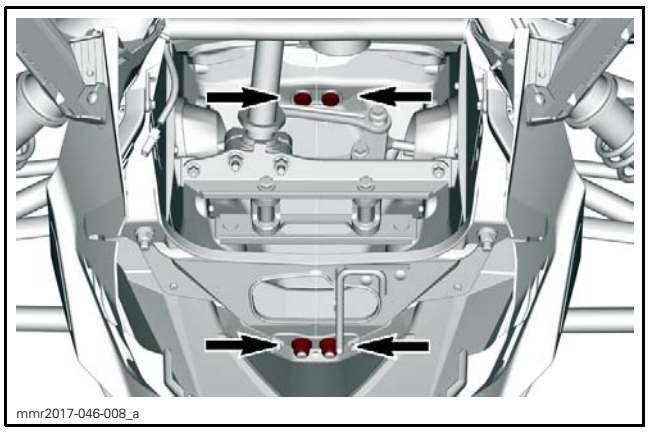
mmr2017-046-008_a

8. Remove lower suspension arm from vehicle.

Installing the Lower Suspension Arm

The installation is the reverse of the removal procedure. However, pay attention to the following.

1. Install a wear plate over bushings.
2. Position the wear plate on top.
3. Fold all tabs against bushings.

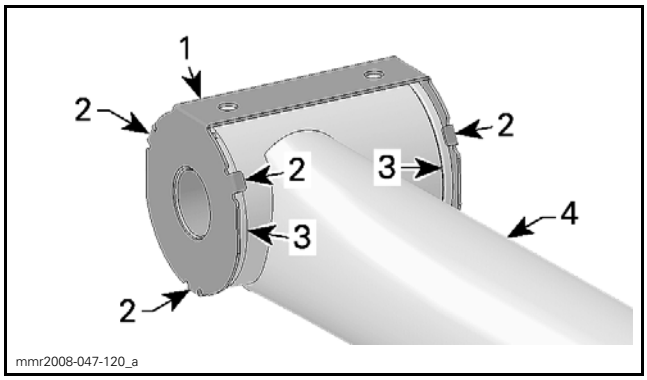

mmr2008-047-120_a

1. Wear plate
2. Wear plate tabs
3. Bushings
4. Lower suspension arm

Install all other removed parts.

LOWER BALL JOINT

NOTE: The MX Z / Renegade lower ball joint is different from the Summit / Freeride lower ball joint.

Inspecting the Lower Ball Joint

Inspect ball joint end for damage. Ensure it's moving freely, a 0.3 mm (.012 in) axial play is acceptable. Replace ball joints as required.

Removing the Lower Ball Joint

1. Remove the *LOWER SUSPENSION ARM*, see procedure in this subsection.
2. Remove circlip securing ball joint to suspension arm.

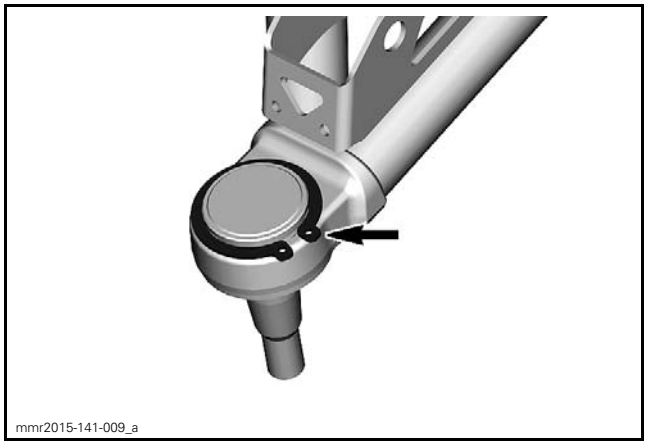
mmr2015-141-009_a

3. Use a shop press and the specified tools to press the ball joint out of the lower suspension arm.

REQUIRED TOOLS	
BALL JOINT REMOVER SUPPORT (P/N 529 036 400)	
Suitable box	

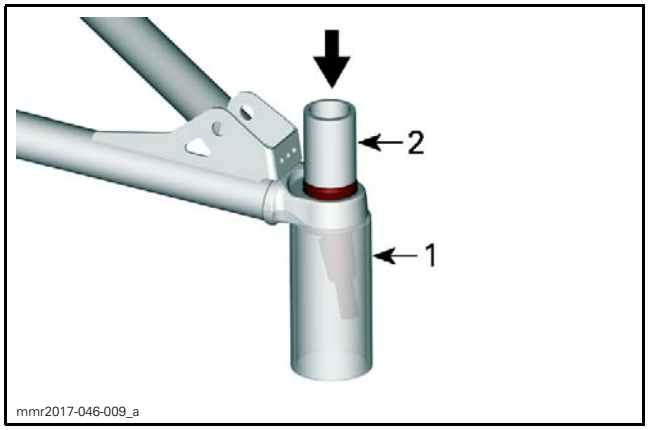

1. Ball joint remover support
2. Suitable box

Installing the Lower Ball Joint

1. Use a press and the specified tools to press the ball joint into the suspension arm end.

REQUIRED TOOLS	
BALL JOINT INSTALLER SUPPORT (P/N 529 036 398)	
BALL JOINT INSTALLER (P/N 529 036 399)	

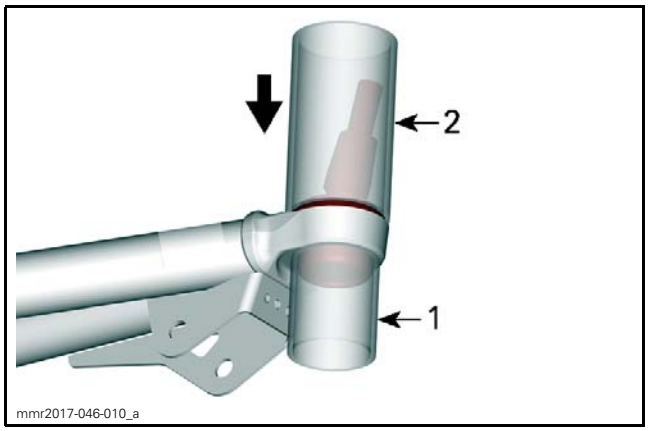

1. Ball joint installer support
2. Ball joint installer

2. Reinstall the circlip. If the circlip seems loose, replace it with a new one.
3. Install the *LOWER SUSPENSION ARM* on vehicle, see procedure in this subsection.

SKI LEG

Removing the Ski Leg

1. Remove ski from ski leg.
2. Detach tie-rod end from ski leg.

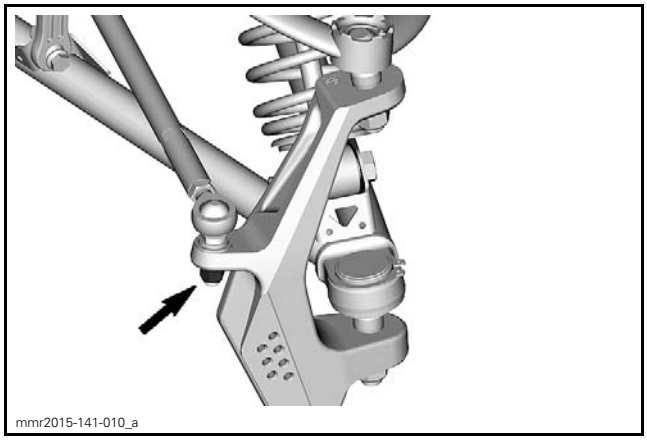

3. Remove upper and lower ball joints from ski leg. Refer to *UPPER BALL JOINT* and *LOWER BALL JOINT* in this subsection.

Installing the Ski Leg

The installation is the reverse of the removal procedure.

STABILIZER BAR

Removing the Stabilizer Bar

1. Remove bolts and nuts securing stabilizer links to lower suspension arms.

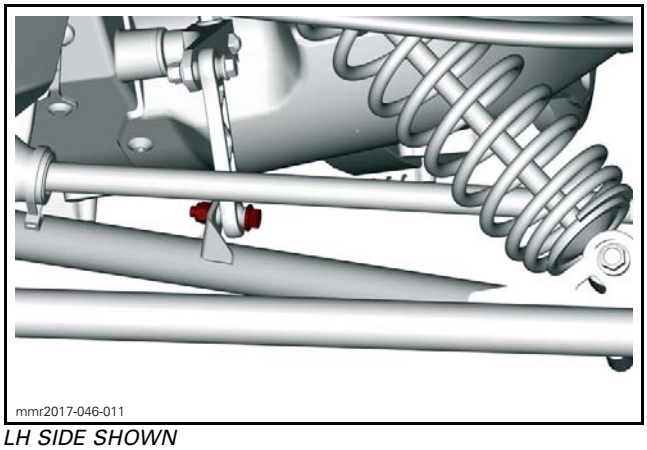

LH SIDE SHOWN

2. Remove stabilizer lever bolts and nuts.

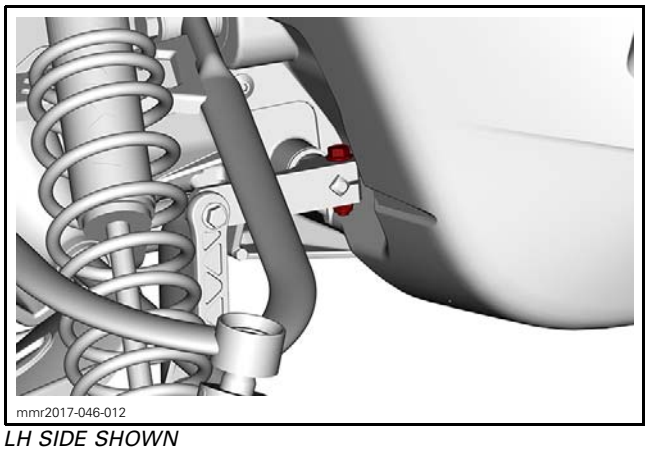

LH SIDE SHOWN

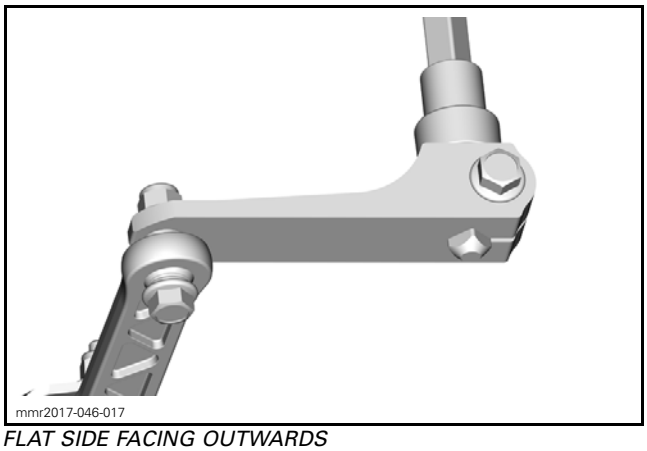

FLAT SIDE FACING OUTWARDS

3. Remove stabilizer levers and plastic bushings from stabilizer bar.
4. Slide stabilizer bar out of vehicle from the LH side.

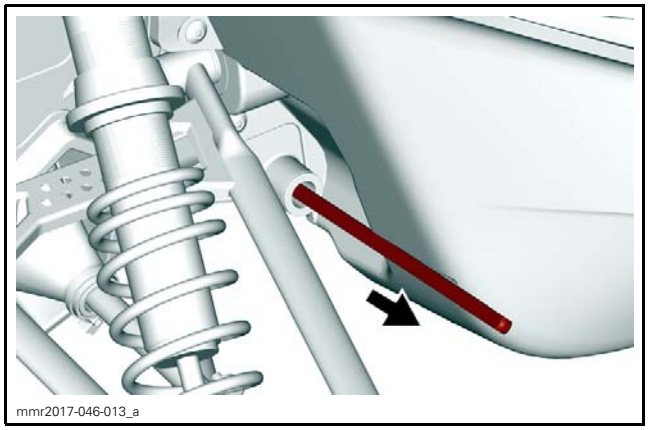

Installing the Stabilizer Bar

The installation is the reverse of the removal procedure. However, pay attention to the following.

Ensure to install the flat side outwards.

Install the screw with the head upwards.

TIGHTENING TORQUE	
Stabilizer bar link nut	19 N•m ± 2 N•m (168 lbf•**in** ± 18 lbf•**in**)

REAR SUSPENSION (tMOTION)

SERVICE TOOLS

Description	Part Number	Page
SHOCK ABSORBER SUPPORTS	529 036 186	275

SERVICE PRODUCTS

Description	Part Number	Page
LOCTITE 243 (BLUE)	293 800 060	278
SYNTHETIC SUSPENSION GREASE	779163	270

RAILS AND IDLER WHEELS

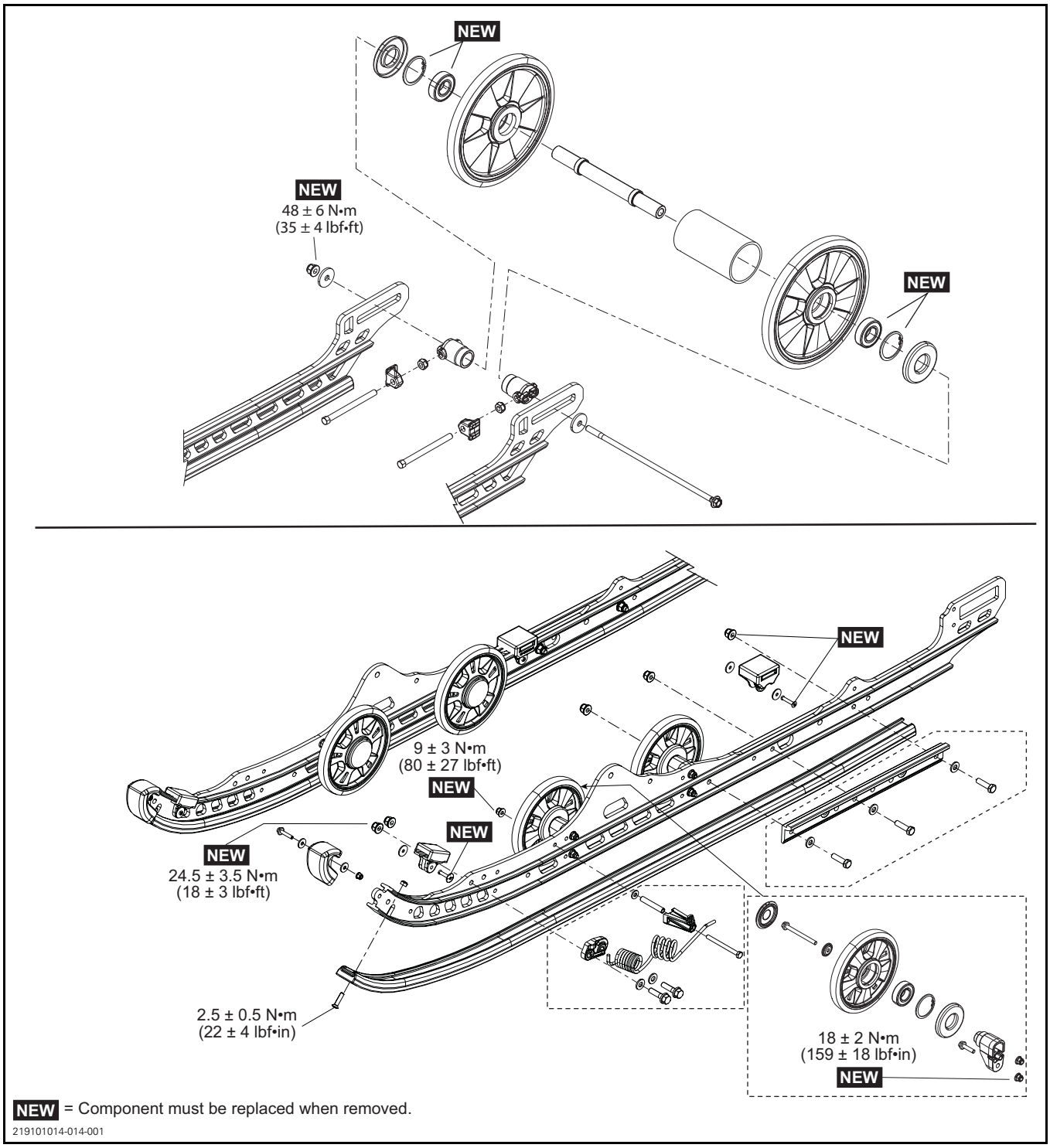

FRONT ARM

All Models Except Summit Expert

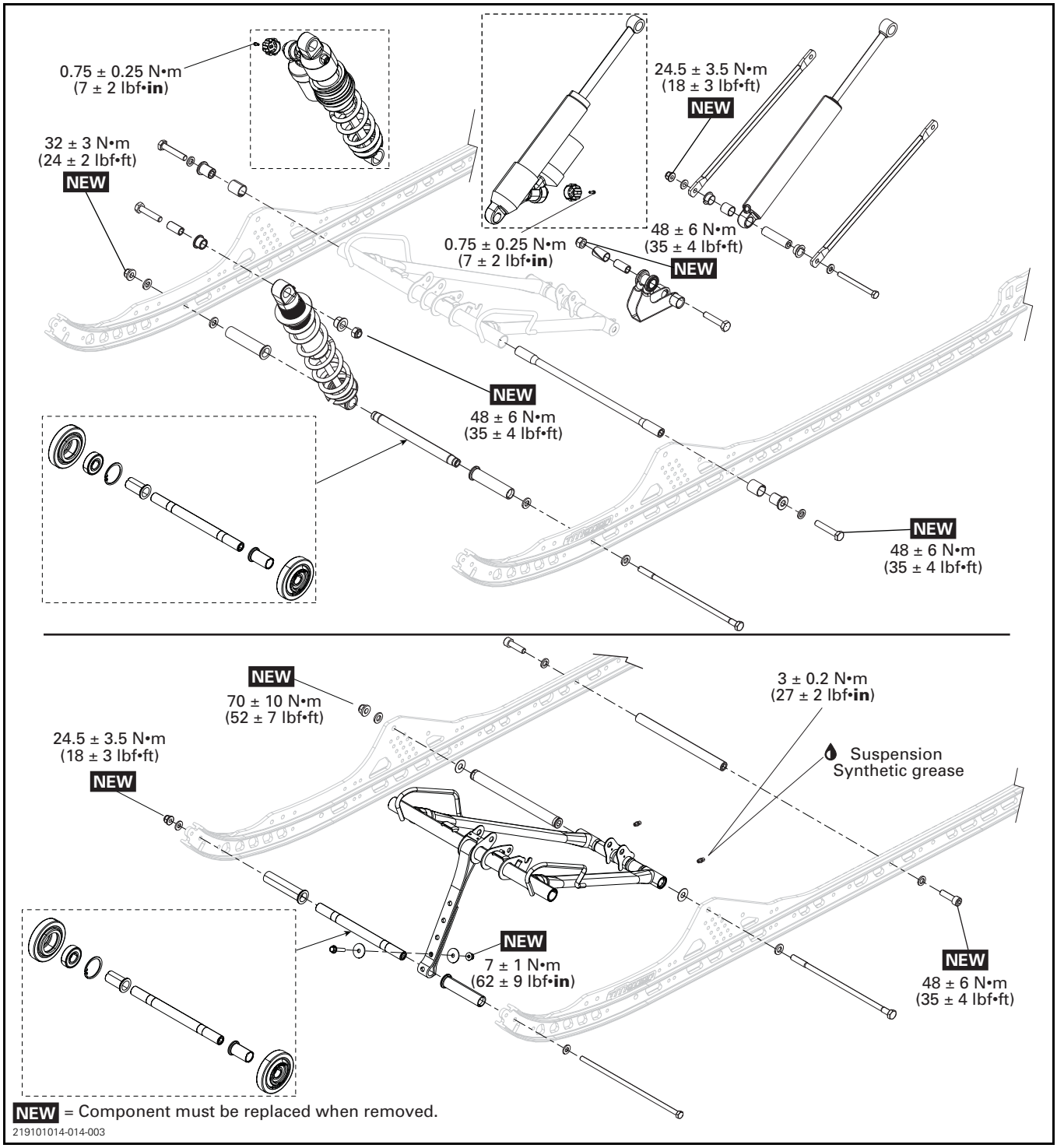

FRONT ARM

Summit Expert

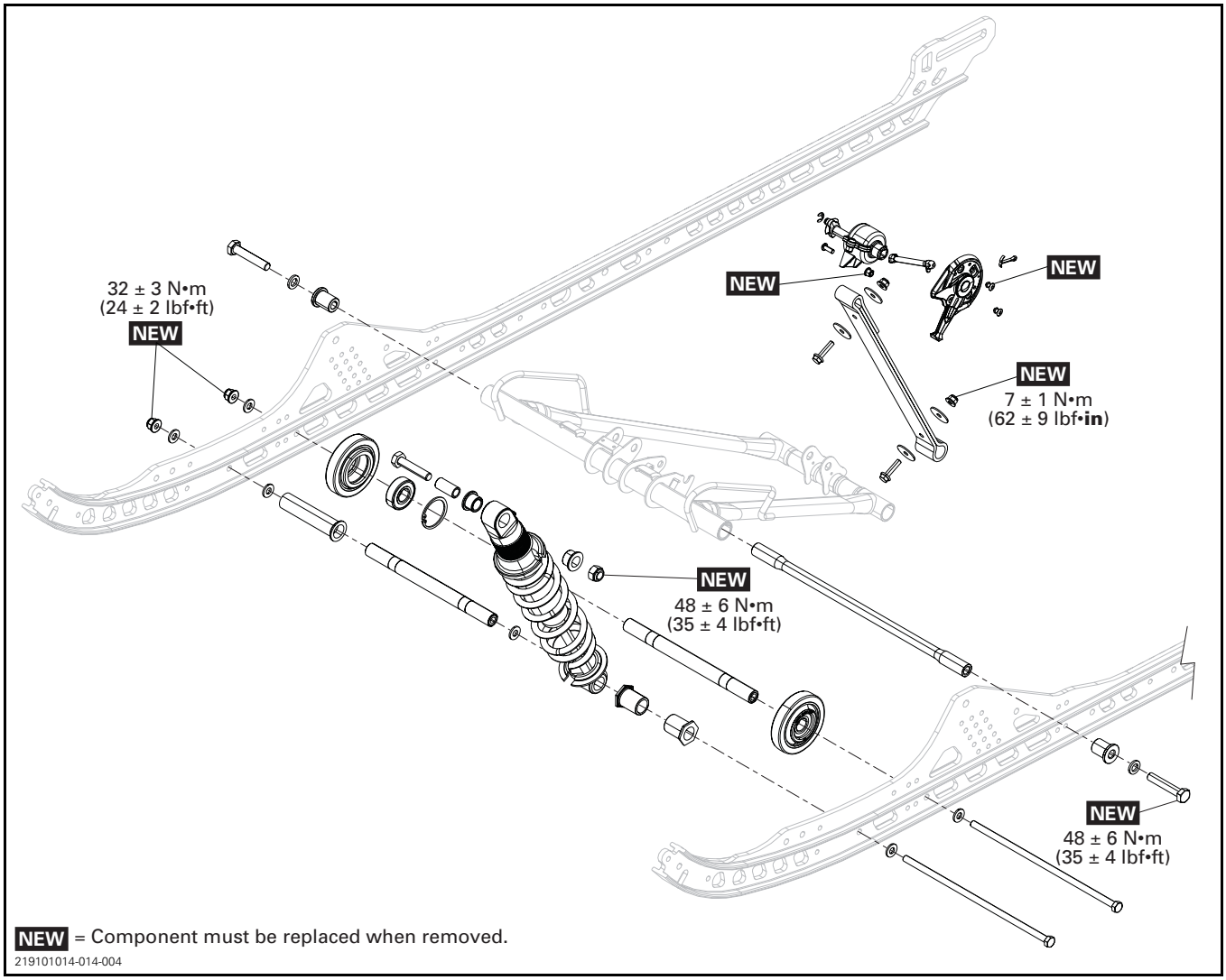

REAR ARM

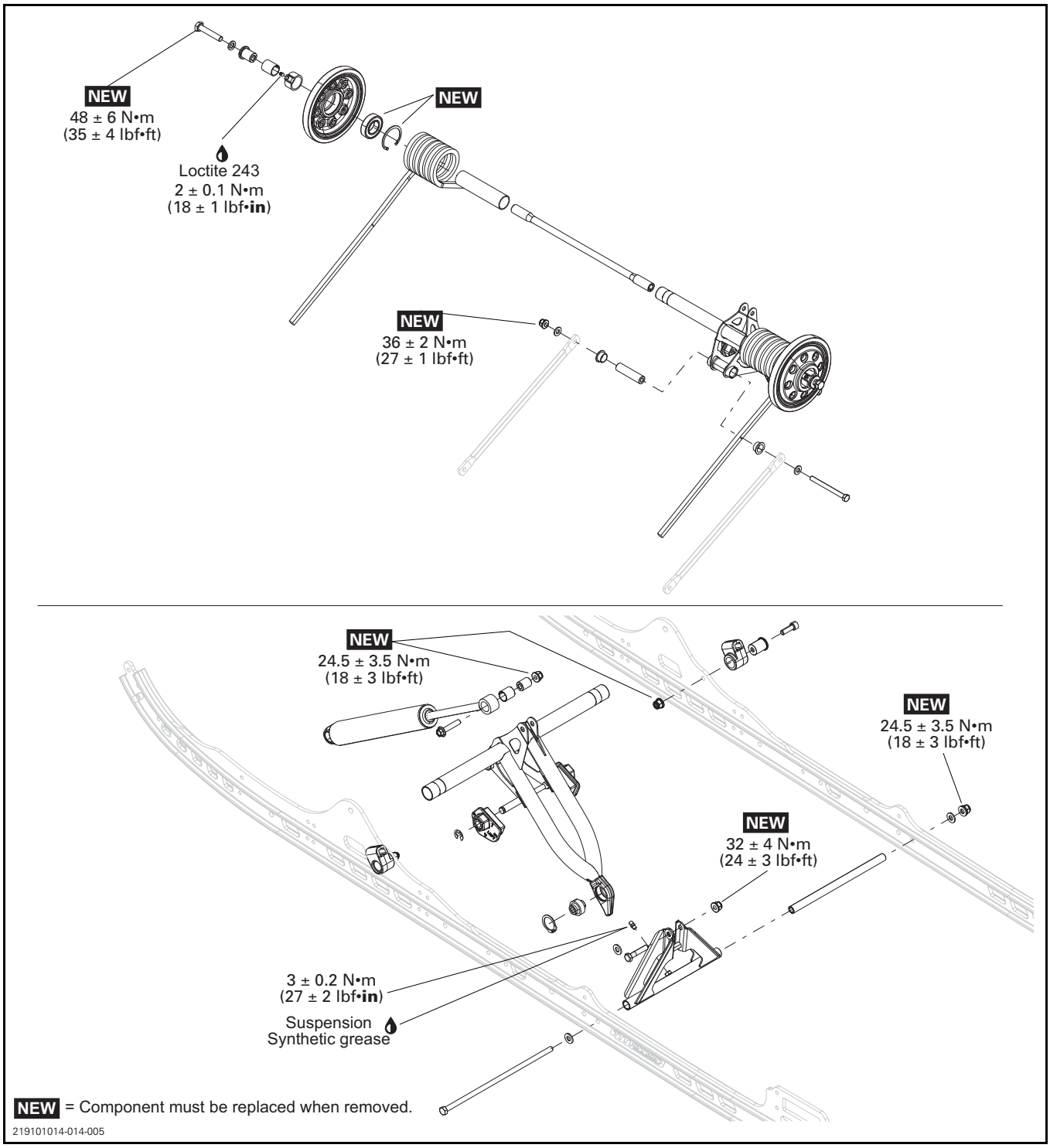
NEW
48 ± 6 N•m
(35 ± 4 lbf•ft)
Loctite 243
2 ± 0.1 N•m
(18 ± 1 lbf•in)
NEW
NEW
36 ± 2 N•m
(27 ± 1 lbf•ft)
NEW
24.5 ± 3.5 N•m
(18 ± 3 lbf•ft)
NEW
24.5 ± 3.5 N•m
(18 ± 3 lbf•ft)
NEW
32 ± 4 N•m
(24 ± 3 lbf•ft)
3 ± 0.2 N•m
(27 ± 2 lbf•in)
Suspension
Synthetic grease
NEW = Component must be replaced when removed.
219101014-014-005

GENERAL

NOTE: Refer to *TECHNICAL SPECIFICATIONS* to identify the snowmobile suspension type.

During assembly/installation, use torque values and service products as in the exploded views.

Clean threads before applying a threadlocker. Refer to *SELF-LOCKING FASTENERS* and *LOCTITE APPLICATION* at the beginning of this manual for complete procedure.

⚠ WARNING

Torque wrench tightening specifications must be strictly adhered to.
Locking devices when removed (e.g.: locking tabs, cotter pins, etc.) must replaced.

ADJUSTMENT

For suspension adjustments, refer to *SUSPENSION ADJUSTMENTS* subsection.

MAINTENANCE

For shock absorbers inspection, refer to *SHOCK ABSORBERS* in this subsection.

INSPECTING THE REAR SUSPENSION MECHANISM AND STOPPER STRAP

1. Inspect rear suspension components for wear, deterioration or damage, replace defective parts if necessary.
2. Inspect stopper strap(s) for wear or cracks.
3. Check bolt and nut securing strap(s) for tightness. If loose, inspect strap holes for deformation. Replace strap if necessary.

INSPECTING THE SLIDER SHOES

Slider shoes are worn out and must be replaced when remaining material exceeding the 2 molding lines is as specified.

MINIMUM SLIDER SHOE THICKNESS
1 mm (.04 in) material remaining exceeding the 2 molding lines

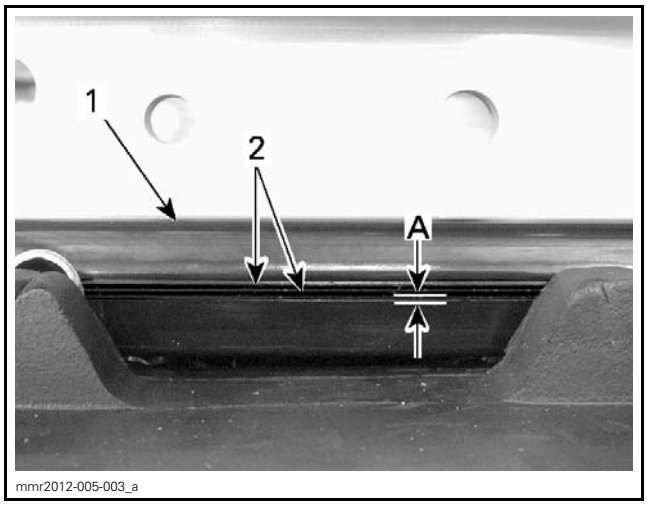

1. Slider shoe
2. Molding lines
A. Minimum thickness: 1 mm (.04 in)

NOTICE **Slider shoes must always be replaced in pairs.**

LUBRICATING THE REAR SUSPENSION

Lubricate the following suspension pivots at grease fittings.

SERVICE PRODUCT
SYNTHETIC SUSPENSION GREASE (P/N 779163)

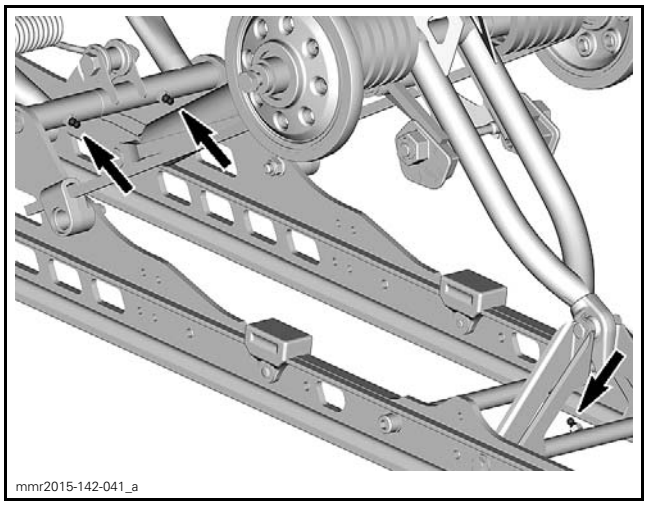

TYPICAL

PROCEDURES

NOTE: Many parts can be changed with rear suspension in place. When specified, refer to *SUSPENSION ASSEMBLY* to remove rear suspension from vehicle.

SUSPENSION ASSEMBLY

Removing Suspension Assembly

1. Lift rear of vehicle and support it off the ground.
2. Completely loosen track tension.
3. Remove and discard rear arm bolts from chassis. Use the following procedure to remove bolts easily.
   3.1 Remove one of the bolts securing the rear arm to frame.

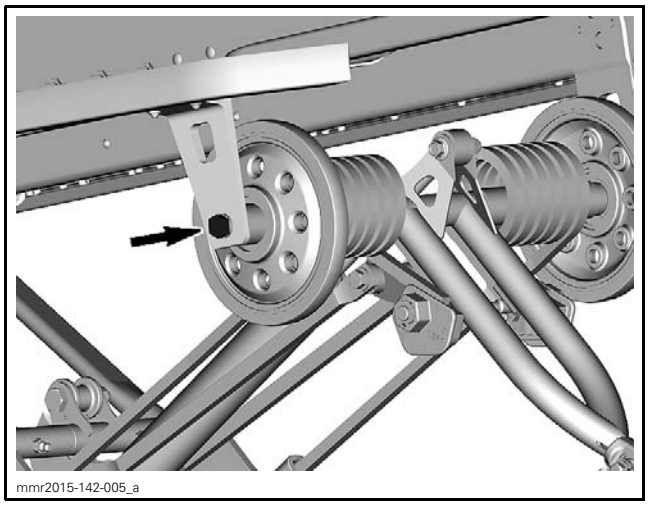
mmr2015-142-005_a

   3.2 Replace this bolt with a longer one and a nut.
   3.3 Screw in by approximately 7 turns.
   3.4 Hold the bolt and tighten locking nut.

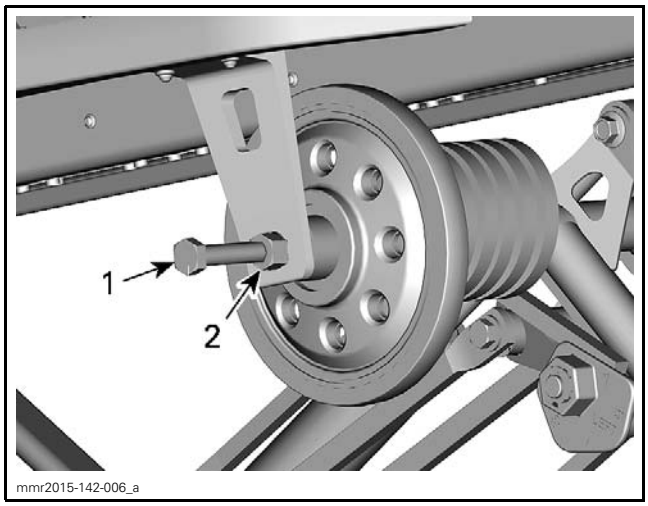

mmr2015-142-006_a

1. Long bolt
2. Locking nut

   3.5 Remove the bolt on the other side then unlock nut and remove the long bolt.
4. Remove bolts retaining front arm to tunnel the same way rear arm bolts have been removed.

NOTE: Discard the front arm bolts.

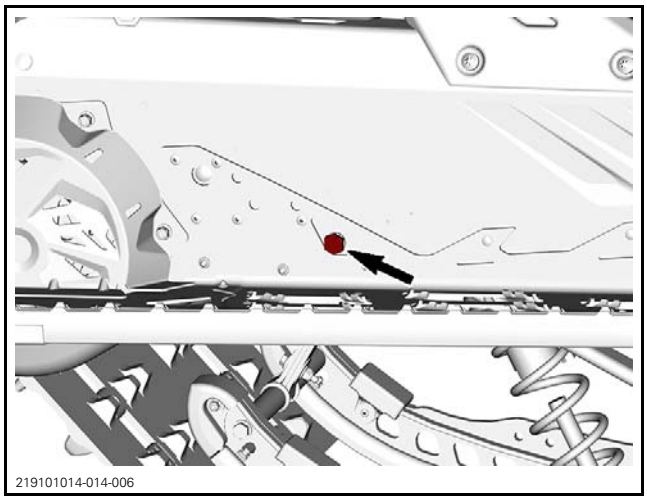
219101014-014-006

5. Lift rear of vehicle until front arm as enough clearance to pass underneath tunnel.
6. Remove suspension.

Installing Suspension Assembly

Installation is the reverse of removal procedure. However, pay attention to the following.

Inspect track thoroughly before reinstalling suspension. Refer to *TRACK* subsection.

Install suspension into track with front portion first.

Install new front and rear arm bolts.

Tighten bolts to specification. Refer to the appropriate exploded view.

Adjust track tension, refer to *TRACK* subsection.

REAR AXLE

Removing Rear Axle

1. Lift rear of vehicle and support it off the ground.
2. Loosen rear axle fasteners.
3. Completely loosen track tension by unscrewing both adjustment screws.

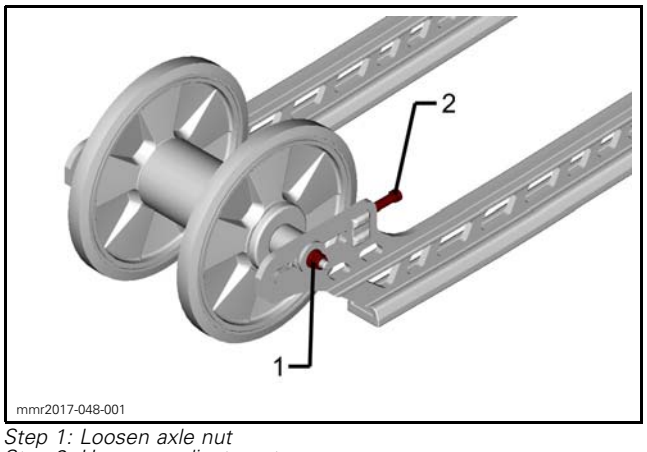

Step 1: Loosen axle nut
Step 2: Unscrew adjustment screws

4. Remove rear axle fasteners and sliders.
5. Pull out the rear axle.

Installing Rear Axle

The installation is the reverse of the removal procedure. However, pay attention to the following.

Bearing circlip faces outward.

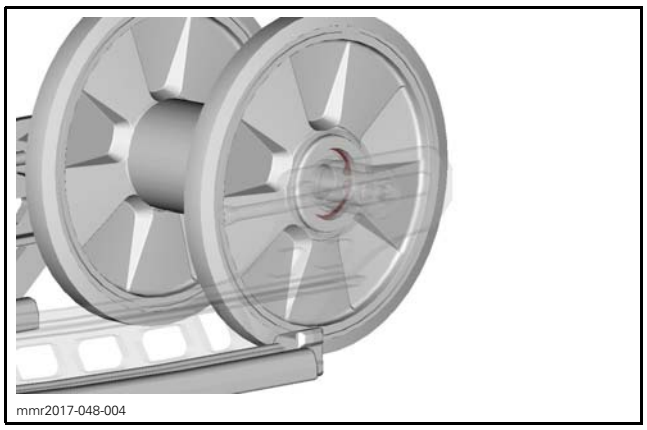

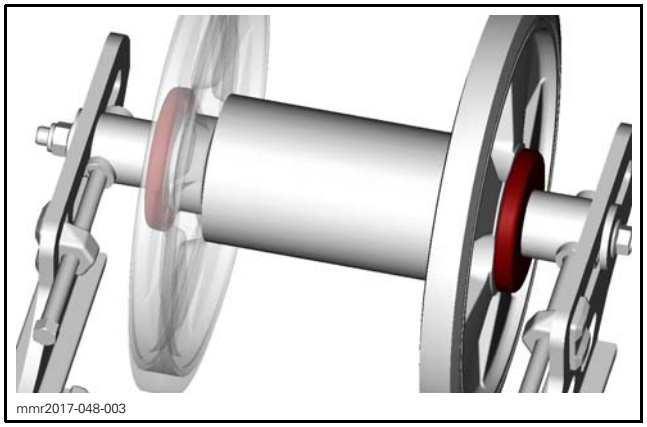

When tightening rear axle, make sure each wheel spacer protuberance is engaged into runner slot.

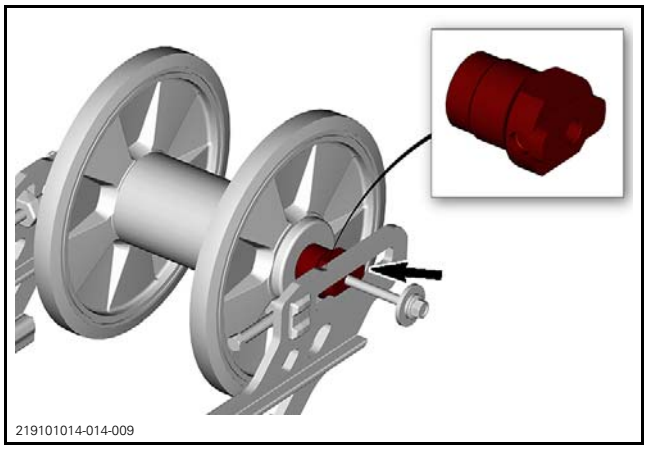

ICE SCRATCHERS

Removing Ice Scratchers

⚠ CAUTION Always remove ice scratchers from hooks before working on rear suspension.

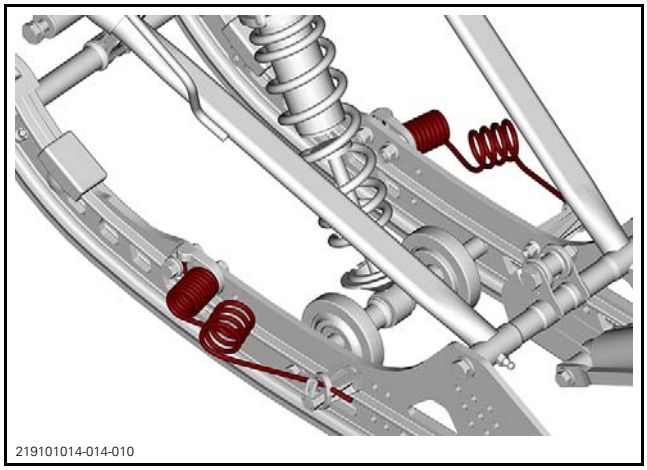

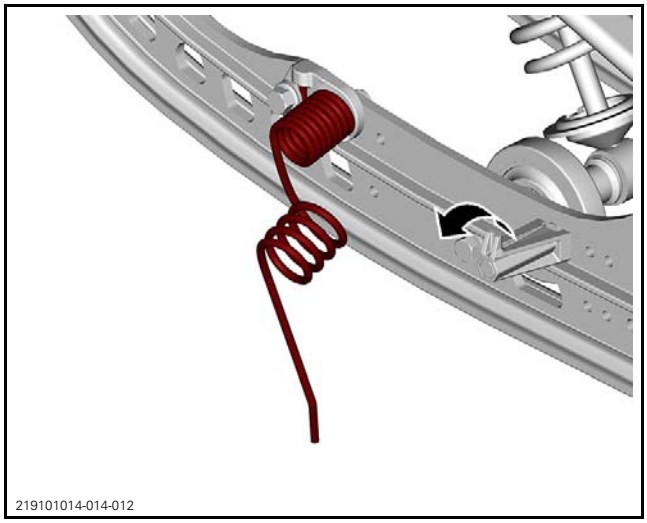

Remove spring holder nuts.

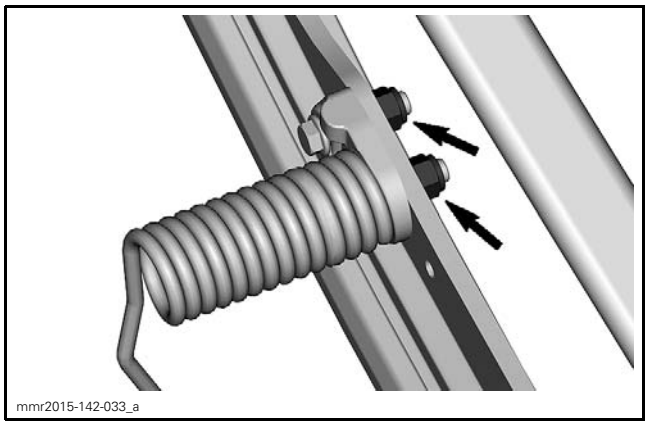

Installing Ice Scratchers

The installation is the reverse of the removal procedure. However, pay attention to the following.

Make sure spring end is well inserted in holder.

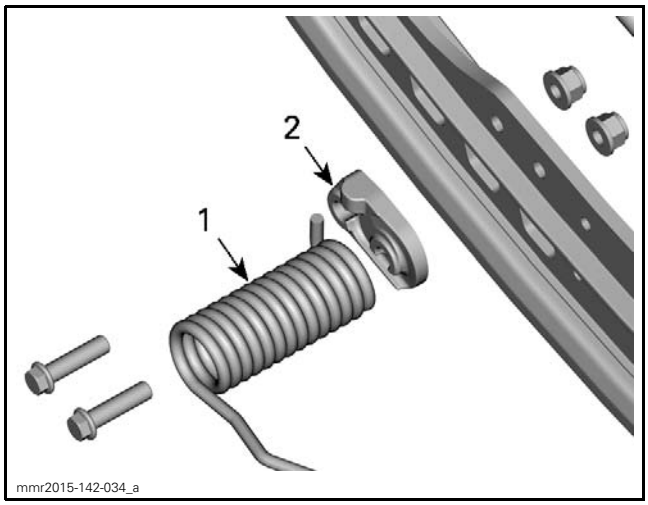

1. Ice scratcher spring
2. Spring holder

Tighten retaining nuts to specification. Refer to the appropriate exploded view.

Install new locking ties.

SHOCK ABSORBERS

Removing Rear Shock Absorber

1. Lift rear of vehicle and support it off the ground.

NOTE: If necessary, to ease shock removal, unfasten stopper strap to release shock pressure.

2. Remove bolts and nuts from shock.

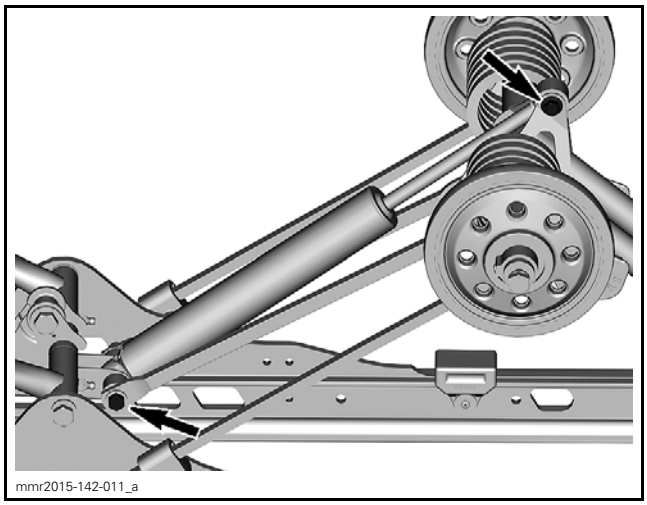

Removing Center Shock Absorber

1. Lift the rear of vehicle and support it off the ground.
2. Unfasten stopper strap.

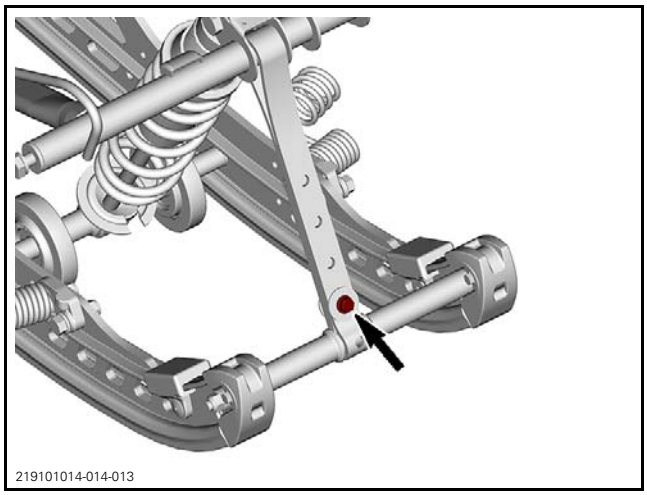

3. On Summit Expert models, remove adjustable stopper strap.

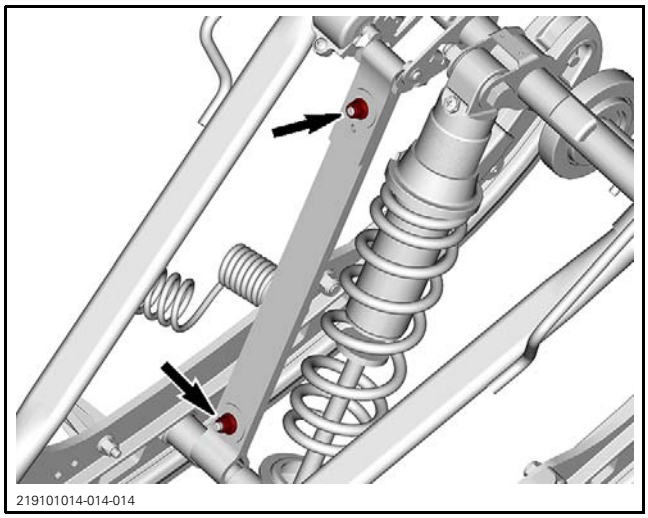

SUMMIT EXPERT MODELS ONLY

4. Remove lower and upper shock absorber nuts and bolts.

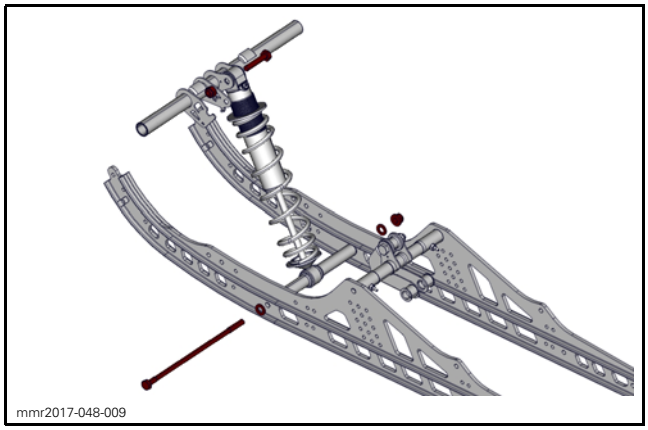

5. Remove shock absorber from vehicle.

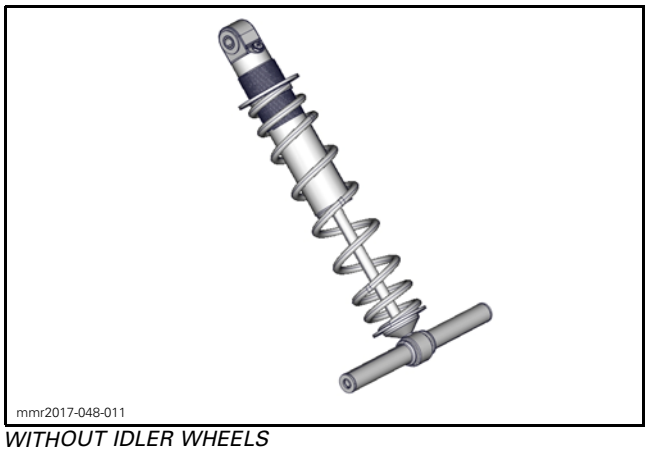

WITH IDLER WHEELS

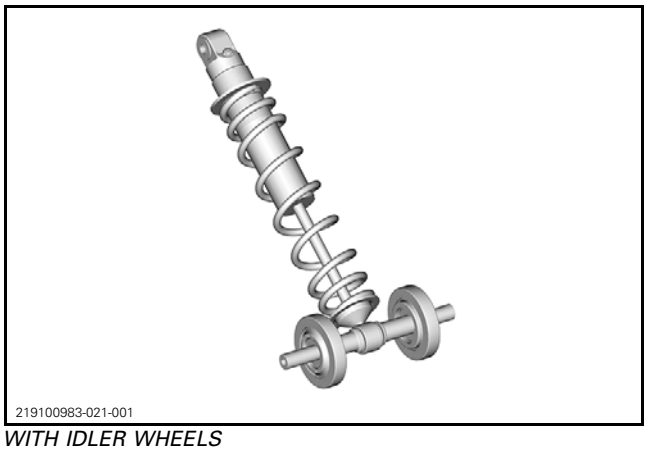

WITH IDLER WHEELS

6. Remove spacers and shock shaft from shock absorber.

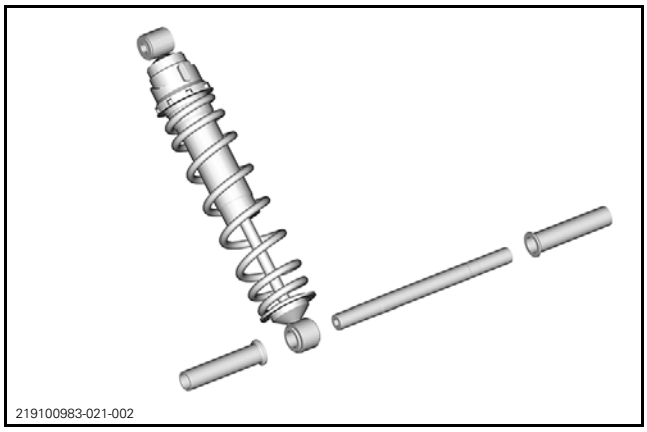

With Idler Wheels on Shaft

7. Remove one wheel from its bearing.

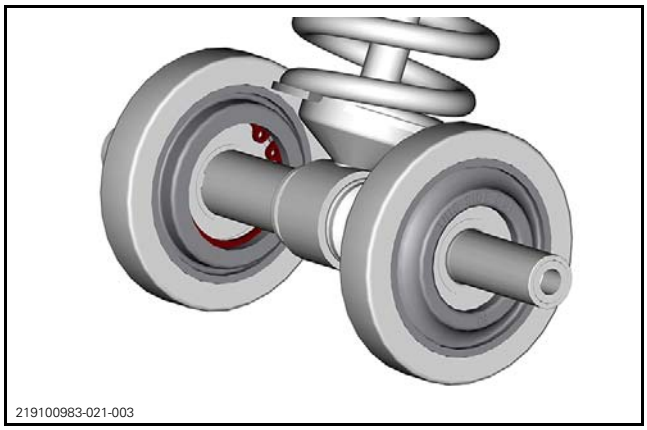

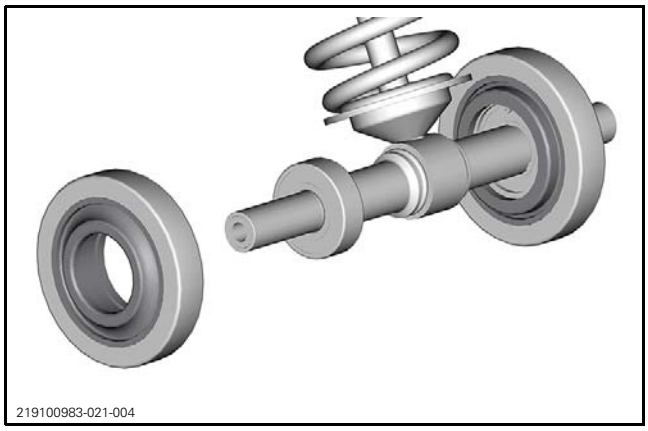

8. Use an appropriate puller to remove the bearing from the shaft.

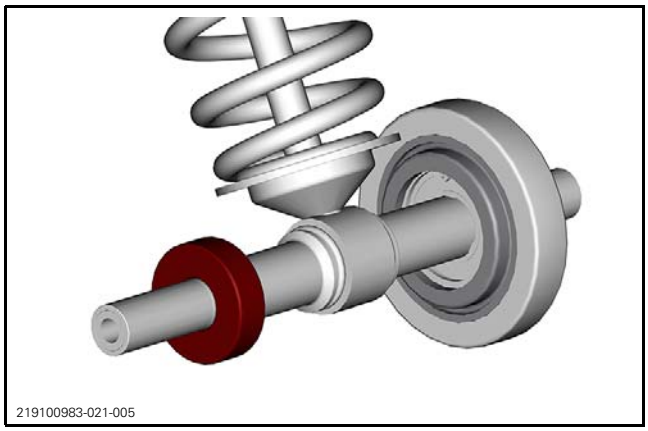

9. Slide the shaft out of the shock absorber.

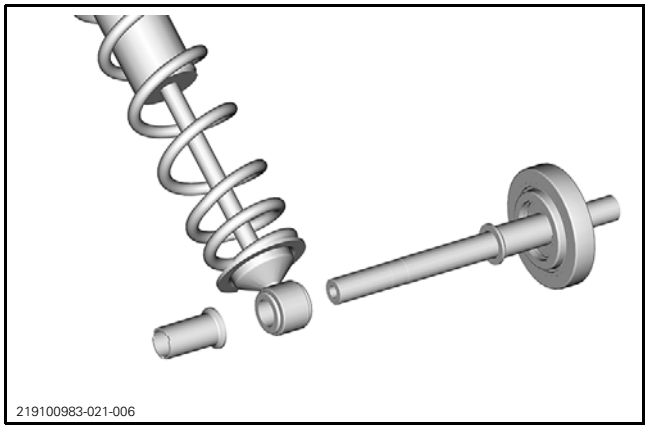

Inspecting Shock Absorbers

NOTE: Unless otherwise noted, shock absorber must be at normal room temperature (21°C ± 2°C (70°F ± 36°F)) during inspection.

1. Perform a visual inspection of the shock:
   – The shock must be exempt of any dent or scratch, especially on the rod.
   – Any defect on the rod, as small as it is, can lead to seal failure and oil leak.
   – If such defect is detected, the shock must be replaced and this will not be covered under warranty.
2. Completely push down shock rod into the body and check result as per table.

HPG SHOCK	RESULT
All except 551 mm (21-11/16 in) rear shock	The rod should completely get in the shock body
551 mm (21-11/16 in) rear shock	The stroke must be at least 138 mm (5-7/16 in)

3. Release shock from completely collapsed position and check result as per table.

HPG SHOCK
– The shock should extend unassisted. – The rod must come out at a steady speed.

4. Proceed with *COMPRESSION TESTING SHOCK ABSORBERS*. See procedure in this subsection.
5. If any faults are present, replace shock.

Compression Testing Shock Absorbers

1. Ensure shock absorber is at normal room temperature (21°C ± 2°C (70°F ± 36°F)).
2. Remove spring from shock absorber (if applicable).
3. Place a bench scale on a suitable drill press.
4. Install the shock absorber supports onto drill press.

REQUIRED TOOL	
SHOCK ABSORBER SUPPORTS (P/N 529 036 186)	

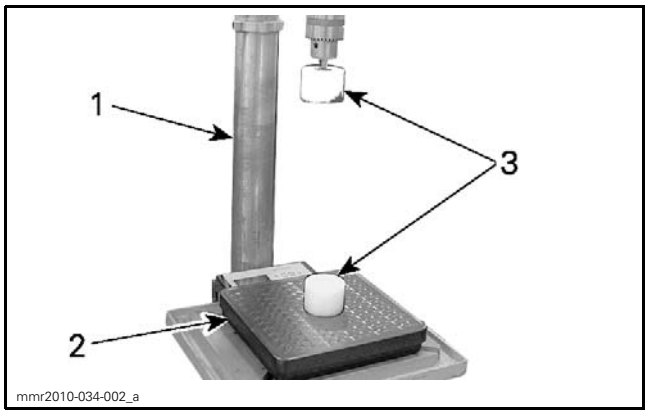

1. Drill press
2. Bench scale
3. Shock absorber supports

5. Set bench scale units to **kg** (or lb).
6. Press **TARE** to reset digits (must indicate (0) zero).

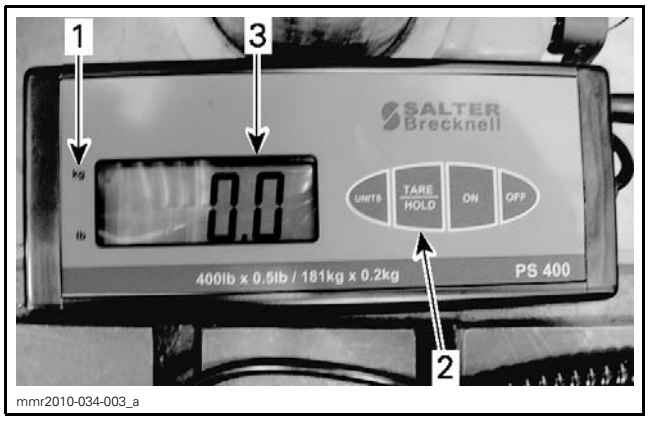

1. Units indicator lamp
2. TARE button
3. Digits

7. Install shock absorber into support with shock body upwards.
8. Adjust drill press table height in order to set the upper shock support flush with the shock body end.
9. Ensure shock absorber is aligned with drill press axis.

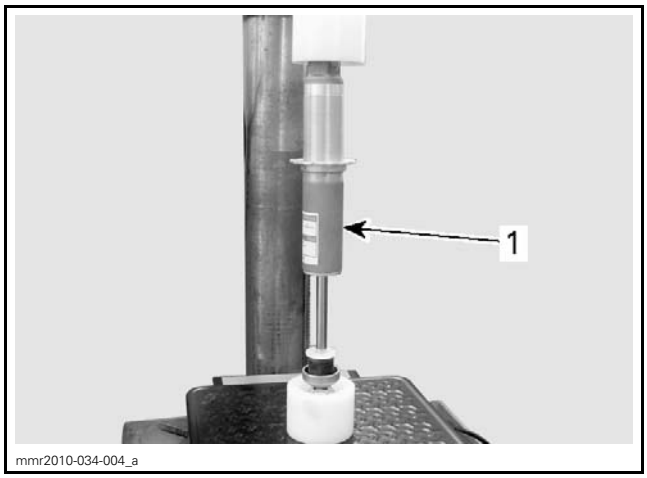

1. Shock body upwards

10. Set the drill press displacement to 10 mm (.394 in) using locking nut.

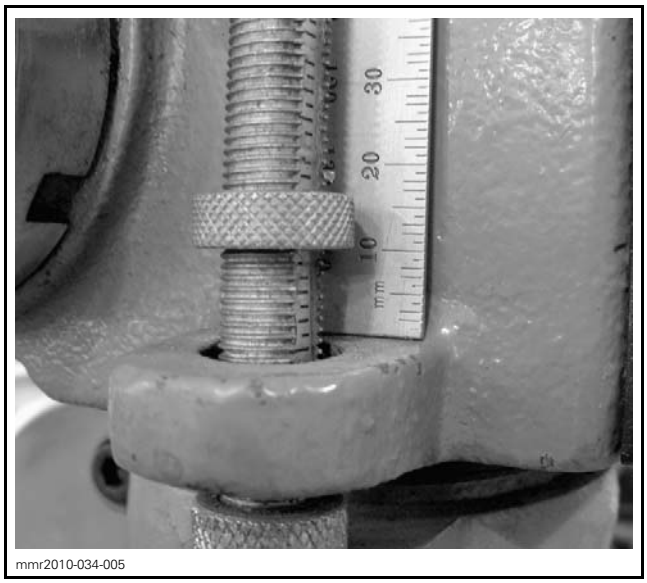

11. Compress shock absorber by 10 mm (.394 in) and hold it in position.
12. Read load recorded on the bench scale.

13. Load reading must be as per the following table.

ROD DIAMETER	SERVICE RANGE
12.5 mm (1/2 in)	24 kgf ± 4 kgf (53 lbf ± 9 lbf)

Installing Rear Shock Absorber

The installation is the reverse of the removal procedure. However, pay attention to the following.

To ease shock installation, secure upper side of shock first.

Install new shock absorber retaining nuts and tighten to specification. Refer to the appropriate exploded view.

Installing Center Shock Absorber

The installation is the reverse of the removal procedure. However, pay attention to the following.

With Idler Wheels on Shaft

Using a press and a suitable support, press the bearing back in place.

Install the wheel and the circlip.

All Models

Position the adjustment ring upwards and the valve towards the tunnel.

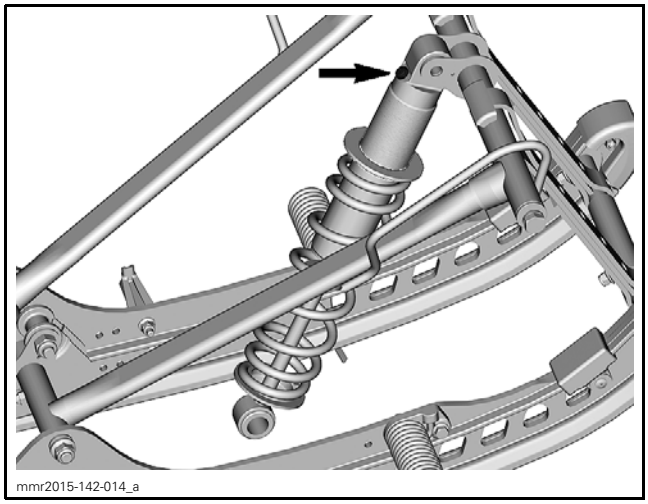

Using new nut, install shock shaft to runners.

Position washers in proper position.

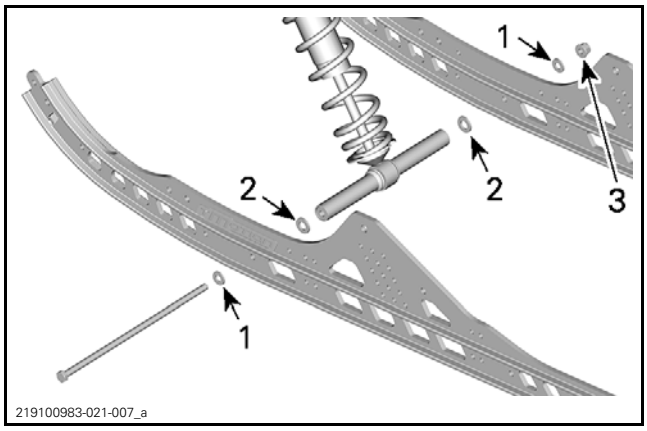

TYPICAL - BOTTOM OF SHOCK ABSORBER
1. *Smaller washers*
2. *Larger washers*
3. *New nut*

Tighten nut to the specification. Refer to exploded view.

REAR SPRINGS

Removing Rear Springs

1. Lift rear of vehicle and support it off the ground.
2. Completely loosen track tension by unscrewing both adjustment screws.
3. Decrease springs preload by turning cams accordingly.

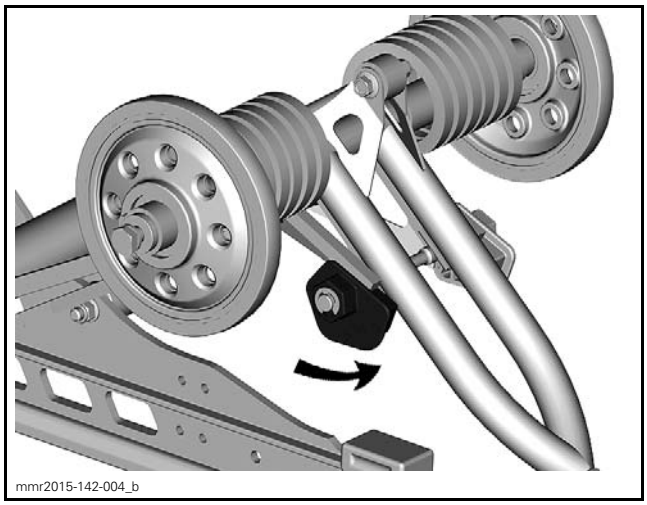

LH SIDE SHOWN

4. Firmly hold the spring support and unscrew its retaining bolt (one each side).

⚠ WARNING

Supports are spring loaded.

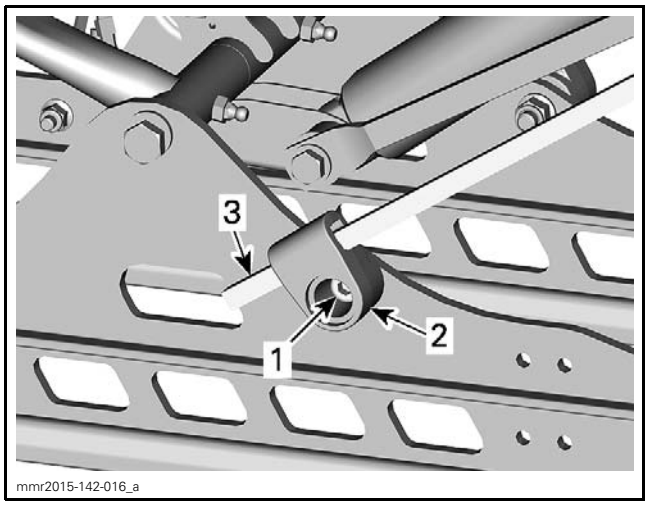

1. Spring support bolt
2. Spring support
3. Spring

5. Remove screws and washers from rear arm top axle. Refer to *REMOVING SUSPENSION ASSEMBLY* for procedure to remove the bolts.
6. Loosen set screw from locking rings.
7. Remove locking rings.
8. Remove upper idler wheels.
9. Remove springs.

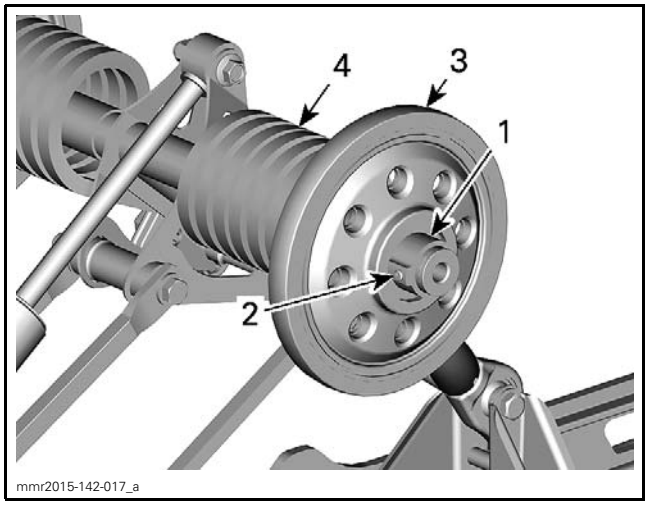

LH SIDE SHOWN
1. Locking ring
2. Set screw
3. Upper idler wheel
4. Rear spring

Installing Rear Springs

Installation is the reverse of removal procedure. However, pay attention to the following.

1. Respect THIS SIDE OUT inscription on top idler wheels.
2. Apply Loctite 243 (blue) on set screws.

SERVICE PRODUCT
LOCTITE 243 (BLUE) (P/N 293 800 060)

3. Make sure that spring end is in cam adjuster.

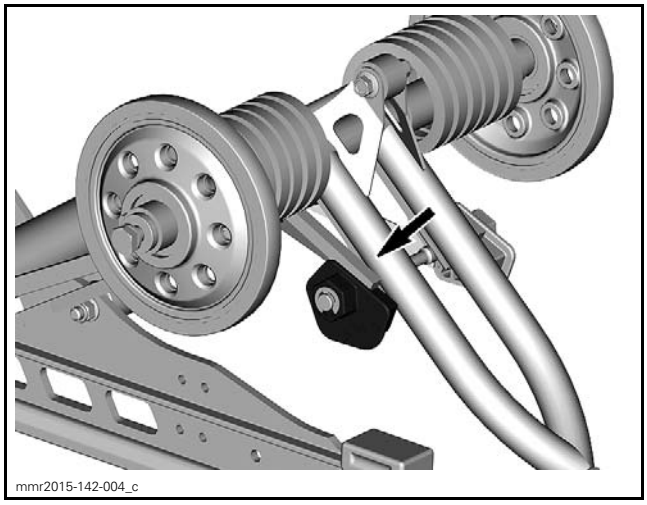

LH SIDE SHOWN

4. Install spring supports upwards.

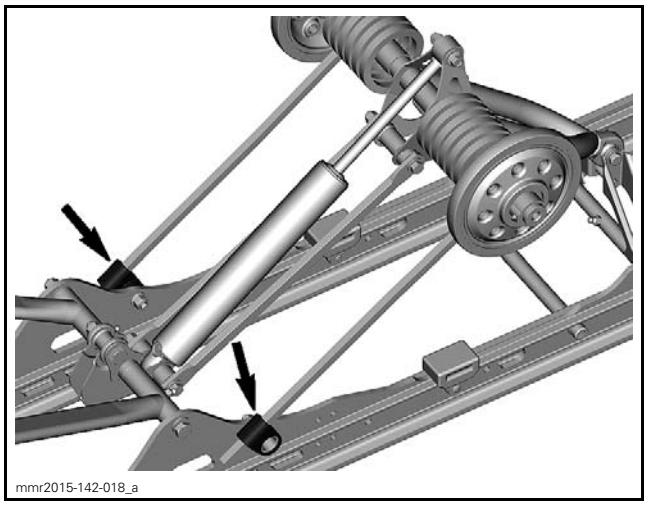

SLIDER SHOES

Removing Slider Shoes

1. Lift rear of vehicle and support it off the ground.
2. Completely loosen track tension.
3. Remove nut and screw of each runner.

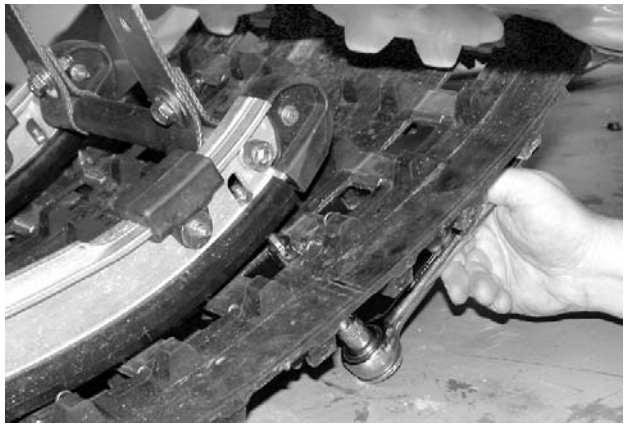
A33F5RA

TYPICAL

4. At the rear of vehicle, align a track window with slider shoe.

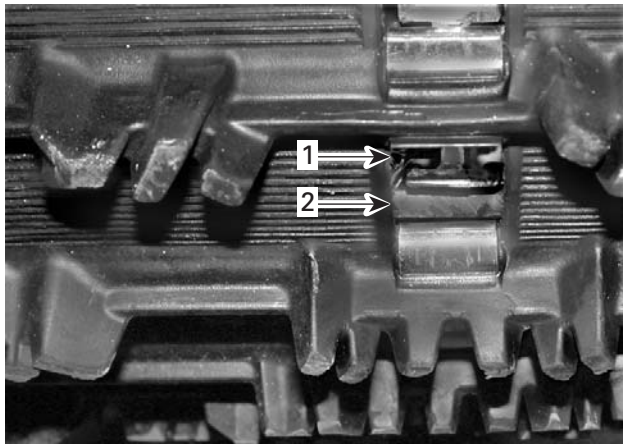

A33F5SA

TYPICAL
1. Track window
2. Slider shoe

5. Using a pry bar or a screwdriver, push slider shoe rearward until it comes in contact with track.


A33F5TA

TYPICAL - PUSH ON SLIDER SHOE

6. Using locking pliers, pull slider shoe through track window to remove.

NOTE: If necessary, lubricate track window to facilitate slider shoe removal.


A33F5UA

TYPICAL - PULL ON SLIDER SHOE TO REMOVE

Installing Slider Shoes

The installation is the reverse of the removal procedure. However, pay attention to the following.

Make sure to insert slider shoe end with hole first.

FRONT ARM

Removing Front Arm

1. Proceed with *REMOVING SUSPENSION ASSEMBLY*, see procedure in this subsection.
2. Remove nut and bolt securing rocker to front arm.

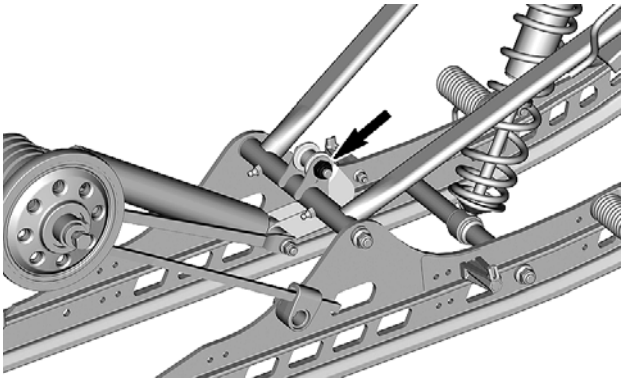
mmr2015-142-019_a

3. Remove the front arm lower bolt, nut and washers. Discard retaining nut.

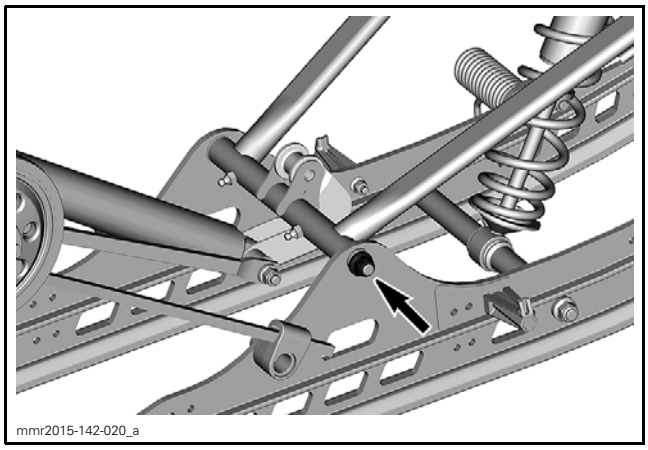

4. Remove the shock absorber upper nut and bolt.

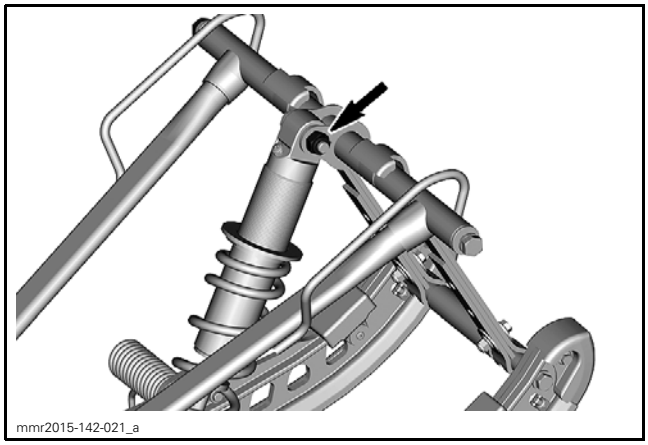

5. Unfasten stopper strap.

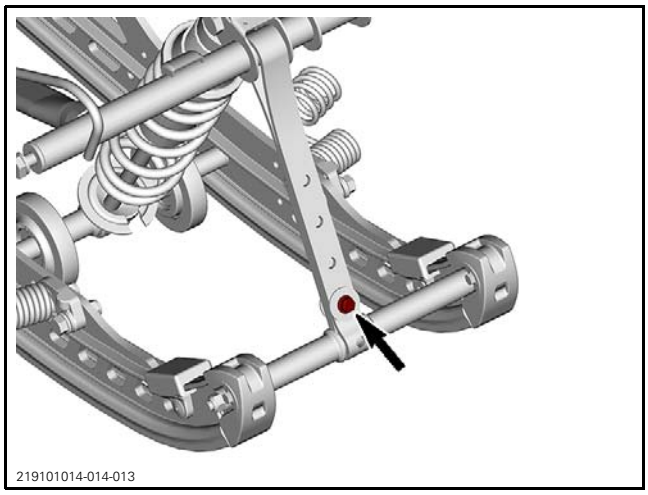

6. On Summit Expert models, proceed as follows.
   6.1 Remove the adjustable stopper strap.

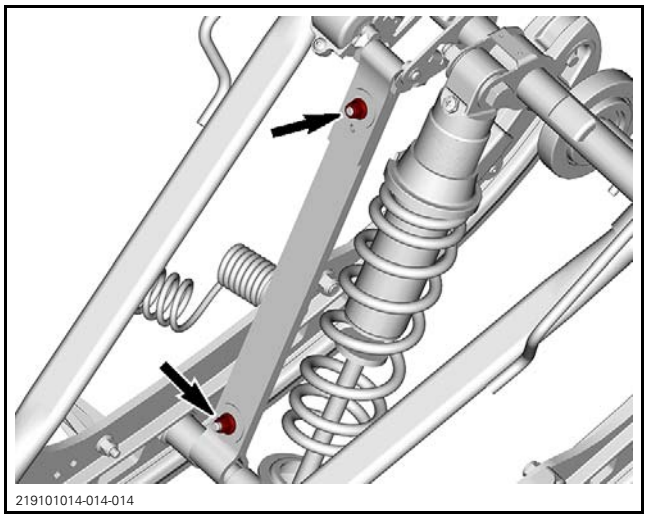

SUMMIT EXPERT MODELS ONLY

   6.2 Remove the crankshaft.

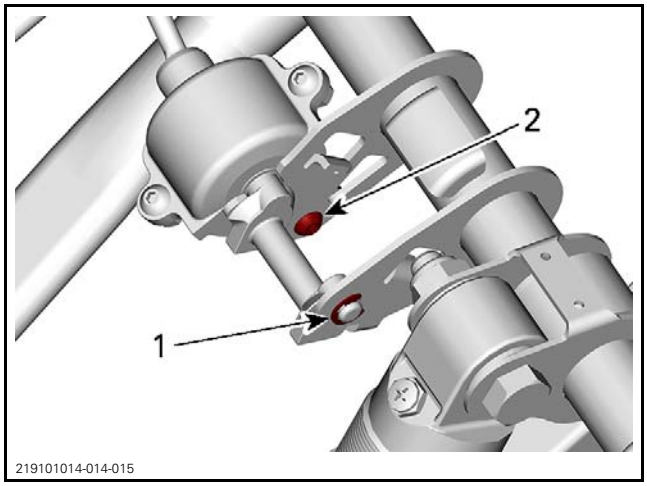

1. Remove circlip
2. Remove screw securing the crankshaft to the front arm

7. Remove front arm.

Installing Front Arm

The installation is the reverse of the removal procedure. However, pay attention to the following.

1. Install new nuts.
2. Install new front arm upper bolts.

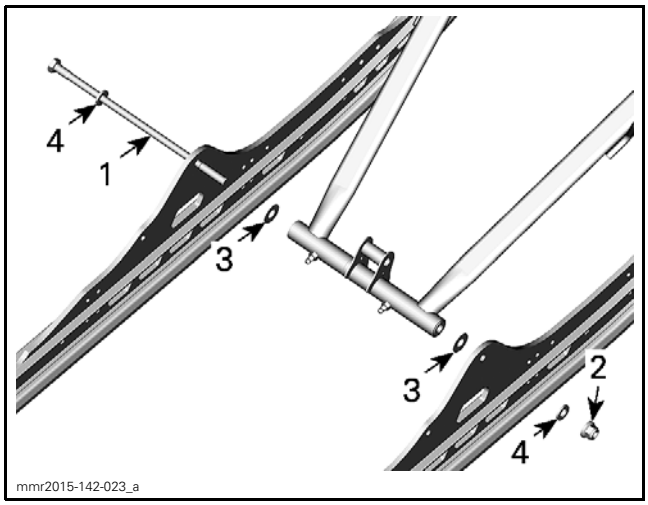

1. Front arm lower bolt
2. Nut
3. Spacer washers
4. Washers

3. See front arm exploded view for proper tightening torque.

REAR ARM

Removing Rear Arm

1. Lift rear of vehicle and support it off the ground.
2. Completely loosen track tension.
3. Proceed with *REMOVING REAR SPRINGS*, see procedure in this subsection.
4. Remove the rear shock absorber upper bolt and nut.
5. Remove nut and bolt securing throttle rods to rear arm.

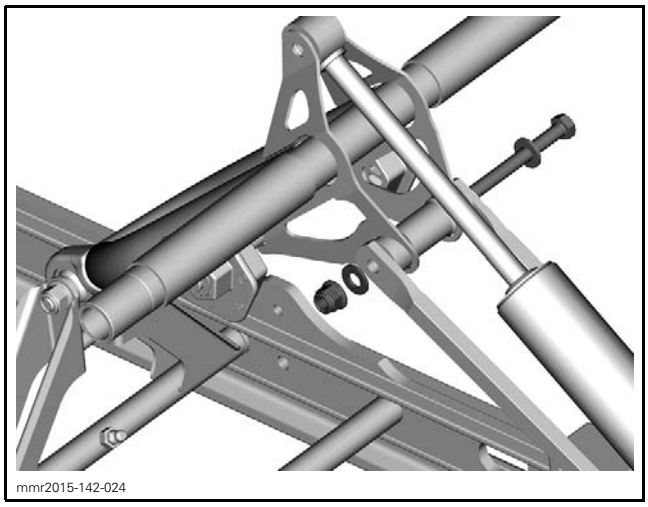

6. Remove bolt, nut and washer holding rear arm to pivot arm.

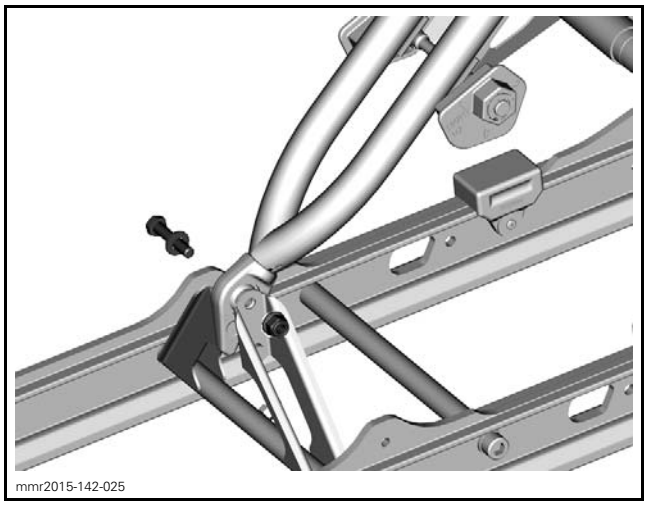

Installing Rear Arm

The installation is the reverse of the removal procedure. However, pay attention to the following.

1. At installation, rear arm stroke limiter must be at rear.

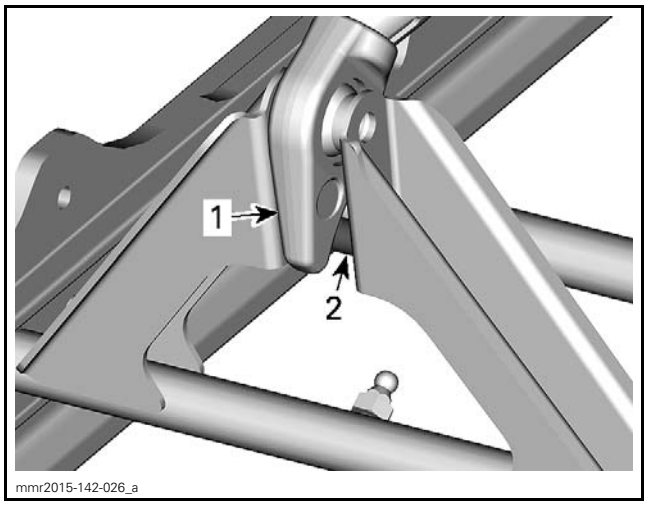

1. Rear arm stroke limiter
2. Pivot arm stroke limiter

2. Install new nuts and tighten to specifications. Refer to appropriate exploded view.

Assemble rear arm fasteners as per following illustrations.

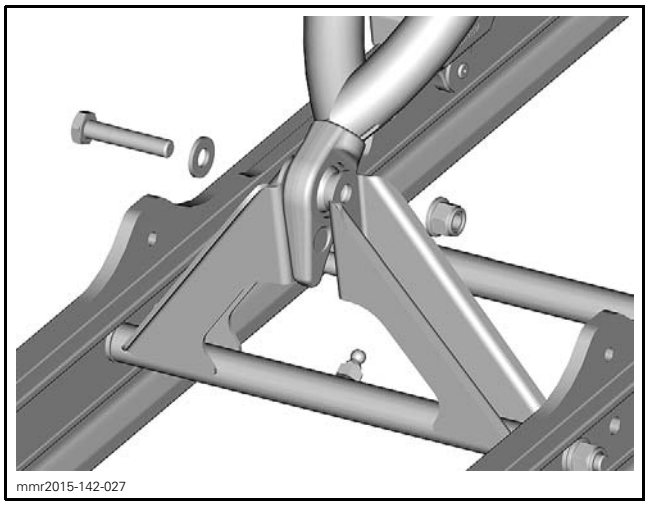
mmr2015-142-027

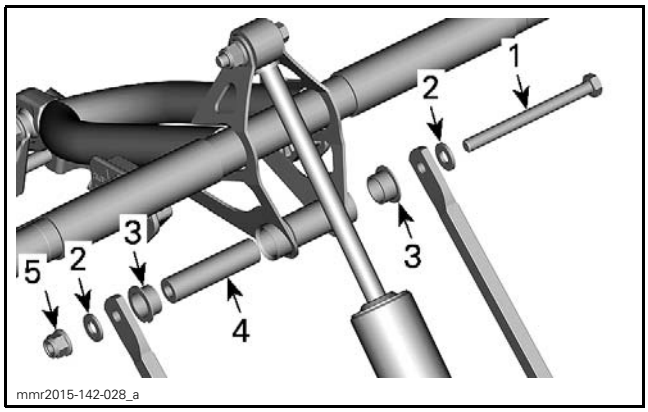

mmr2015-142-028_a

SOME PARTS REMOVED FOR CLARITY PURPOSES
1. *Throttle rod upper bolt*
2. *Washers*
3. *Bushings*
4. *Axle*
5. *Throttle rod upper nut*

PIVOT ARM

Removing Pivot Arm

1. Lift rear of vehicle and support it off the ground.
2. Completely loosen track tension by unscrewing both adjustment screws.
3. Remove bolt, nut and washer retaining rear arm to pivot arm.

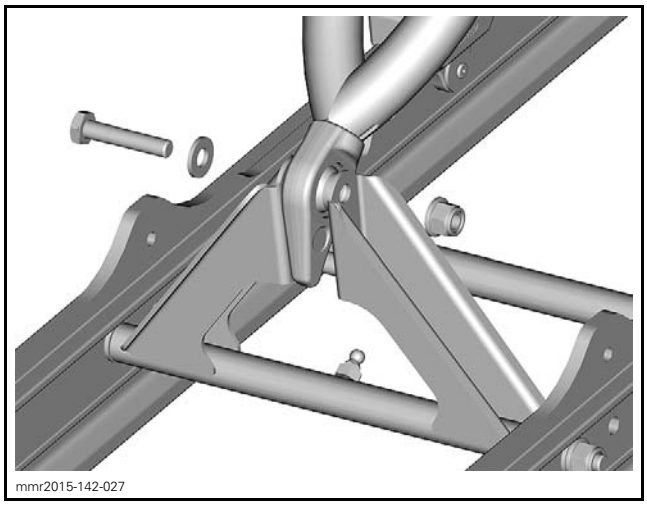
mmr2015-142-027

4. Remove bolt, nut and 4 washers retaining pivot arm to runners.

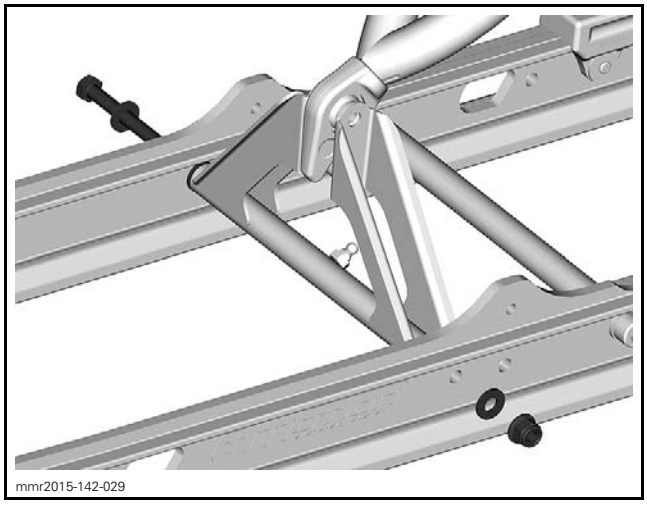
mmr2015-142-029

NOTE: Make sure inner washers are properly removed from assembly to avoid losing them.

5. Carefully remove pivot arm from rear arm.

Installing Pivot Arm

The installation is the reverse of the removal procedure. However, pay attention to the following.

Assemble pivot arm fasteners as per following illustrations, with grease fitting towards front of vehicle.

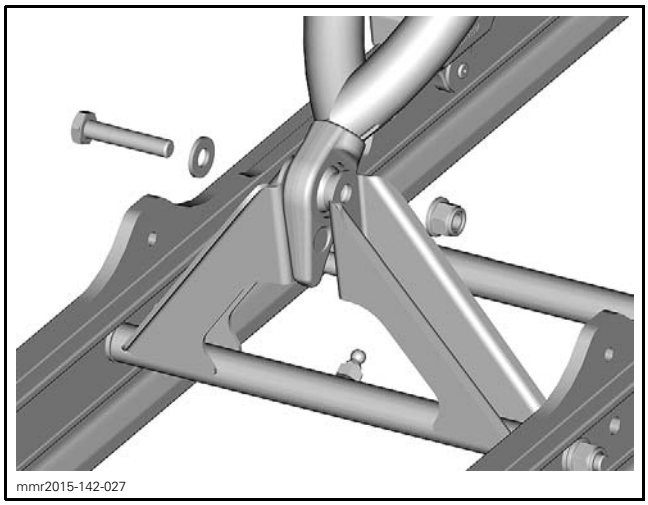

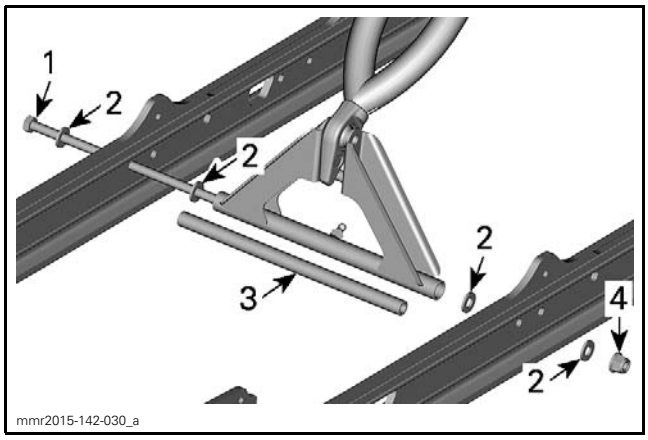

PARTS REMOVED FOR CLARITY PURPOSE
1. *Pivot arm lower screw*
2. *Washers*
3. *Axle*
4. *Pivot arm nut*

Tighten pivot arm nuts to specification. Refer to appropriate exploded view.

Lubricate pivot arm. Refer to *MAINTENANCE* in this subsection.

STOPPER STRAP

Refer to the exploded views at the beginning of this subsection for parts layout and fasteners tightening torque.

STEERING SYSTEM

SERVICE PRODUCTS

Description	Part Number	Page
SYNTHETIC GREASE	779162	297
SYNTHETIC SUSPENSION GREASE	779163	293, 310
XPS BRAKES AND PARTS CLEANER (USA)	219 701 705	296
XPS BRAKES AND PARTS CLEANER	219 701 776	296

SKIS (WITHOUT ADJUSTABLE RUNNER)

Trail and Crossover Models

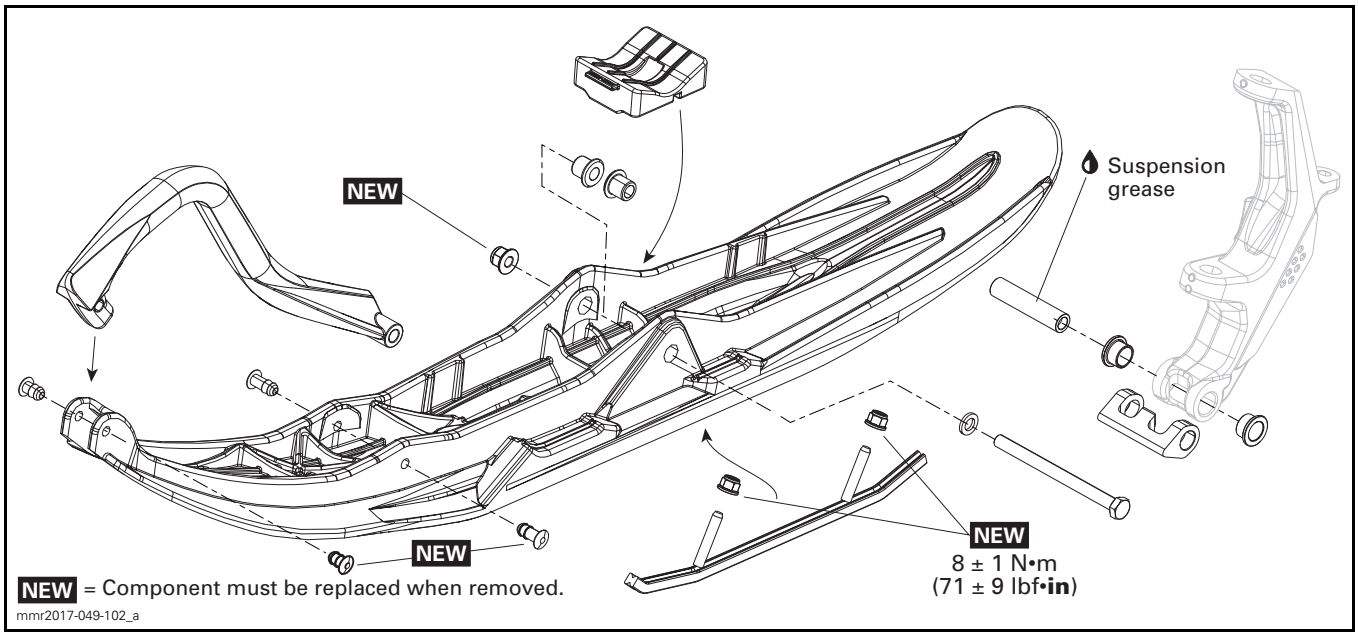

Mountain Models

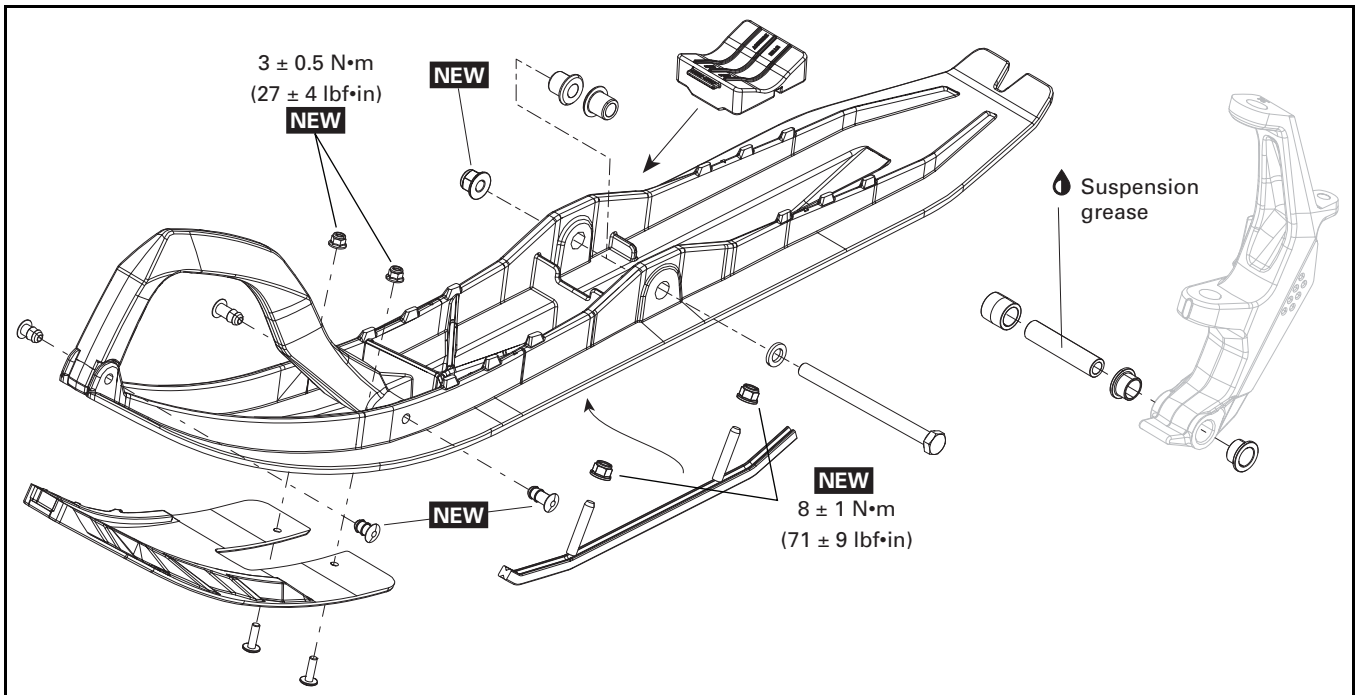

NEW = Component must be replaced when removed.

mmr2017-049-103_a

SKIS (WITH ADJUSTABLE RUNNER)

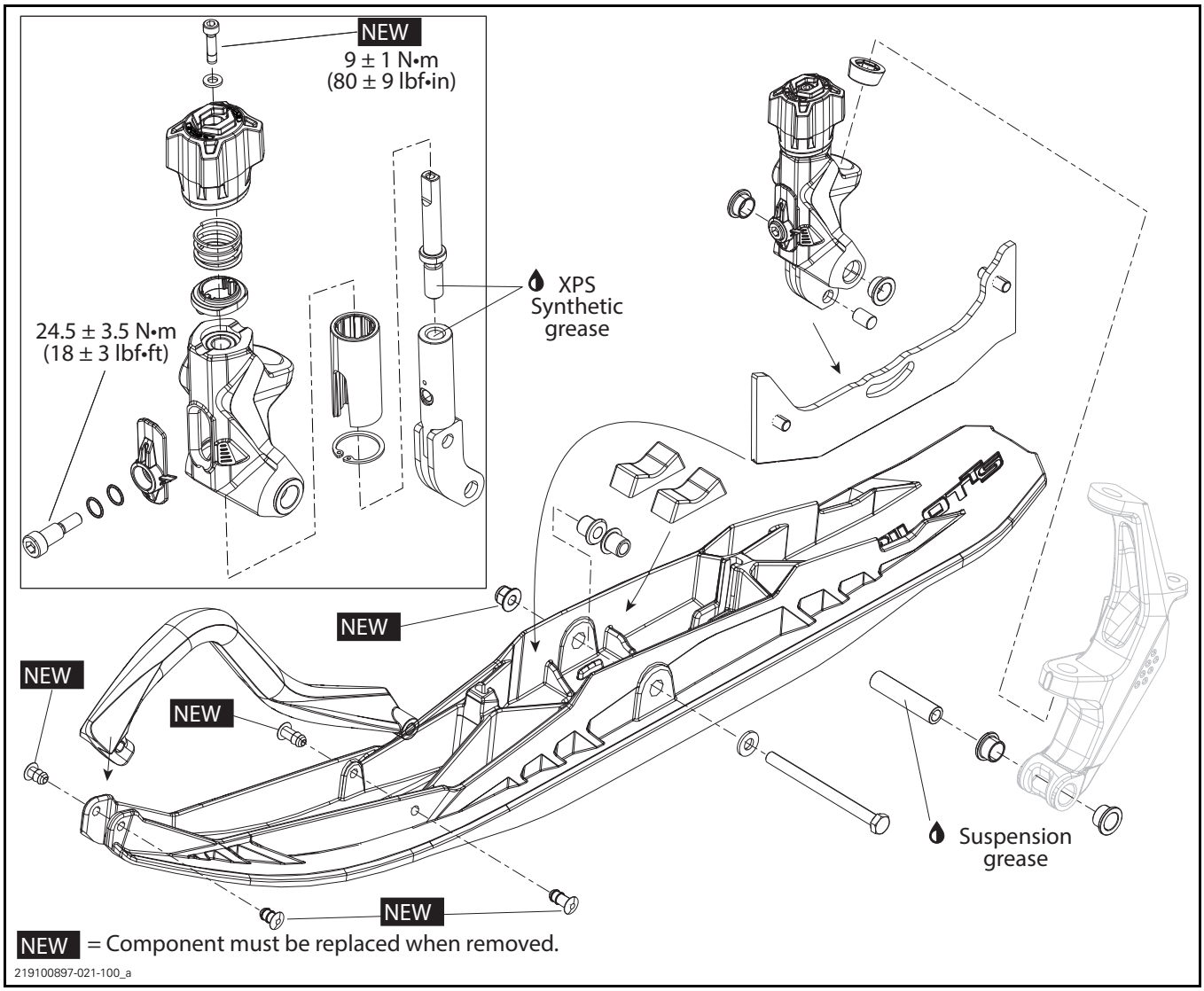

STEERING COLUMN AND TIE-RODS - PITMAN ARM

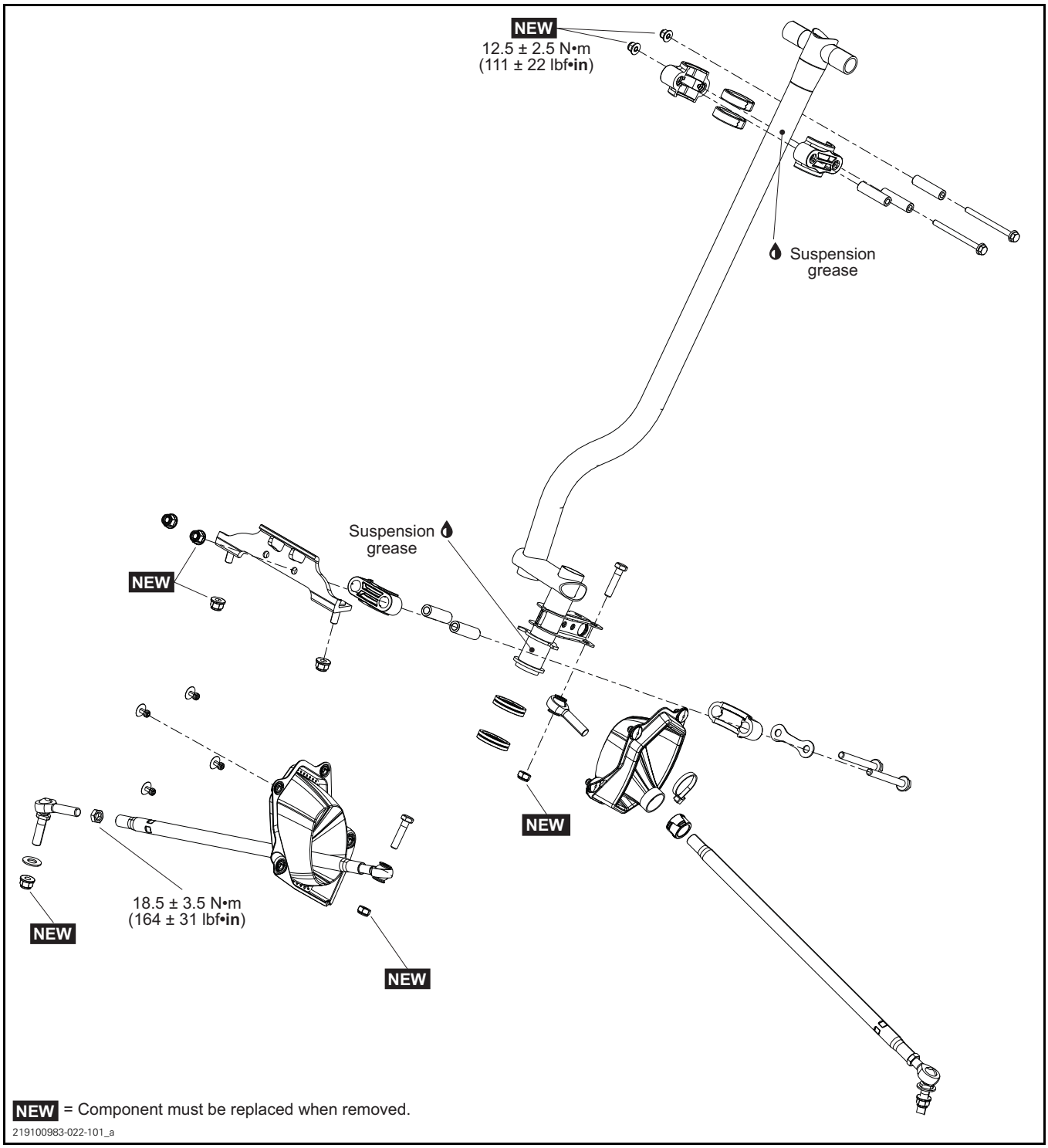

STEERING COLUMN AND TIE-RODS - RACK

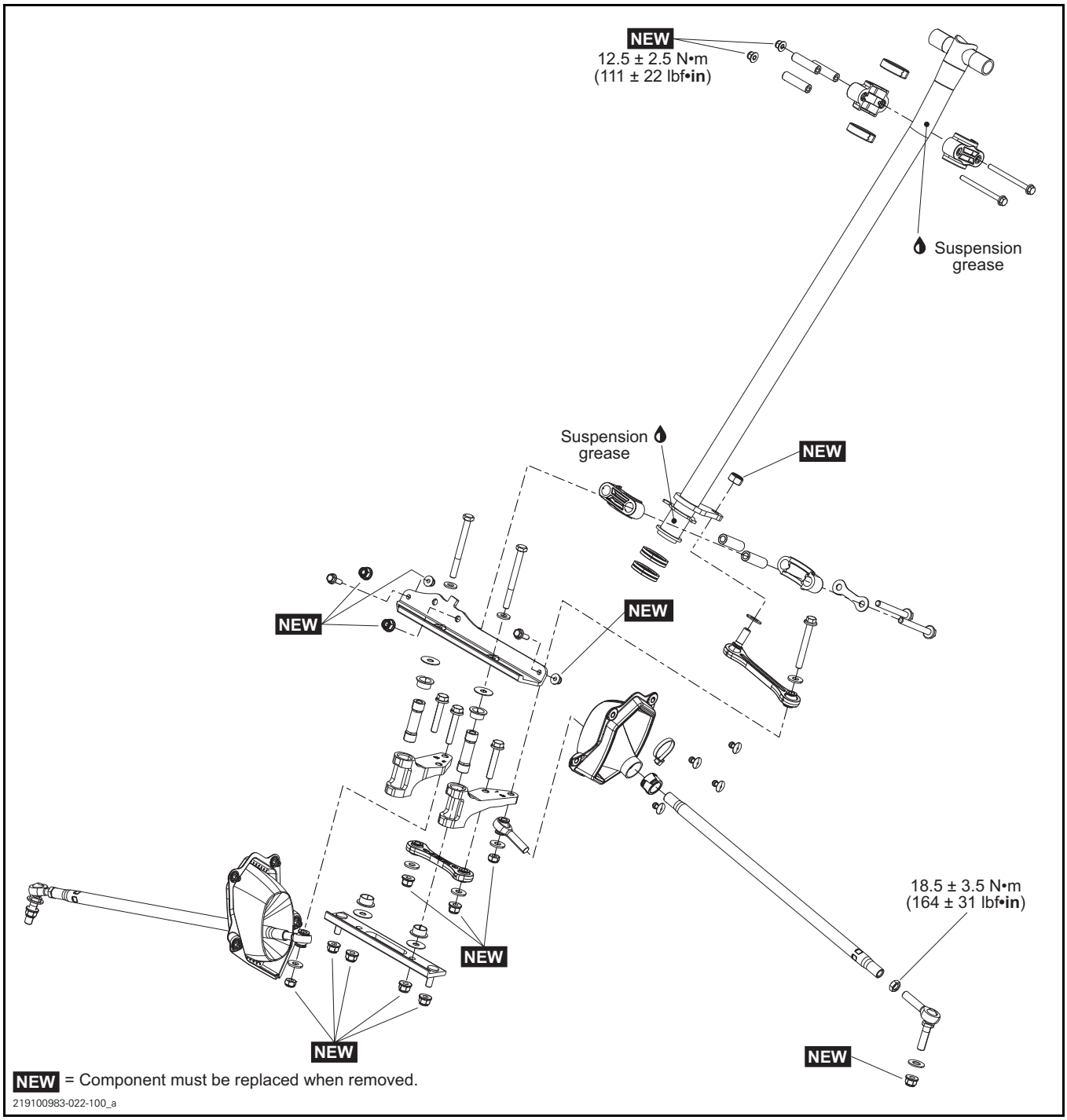

HANDLEBAR

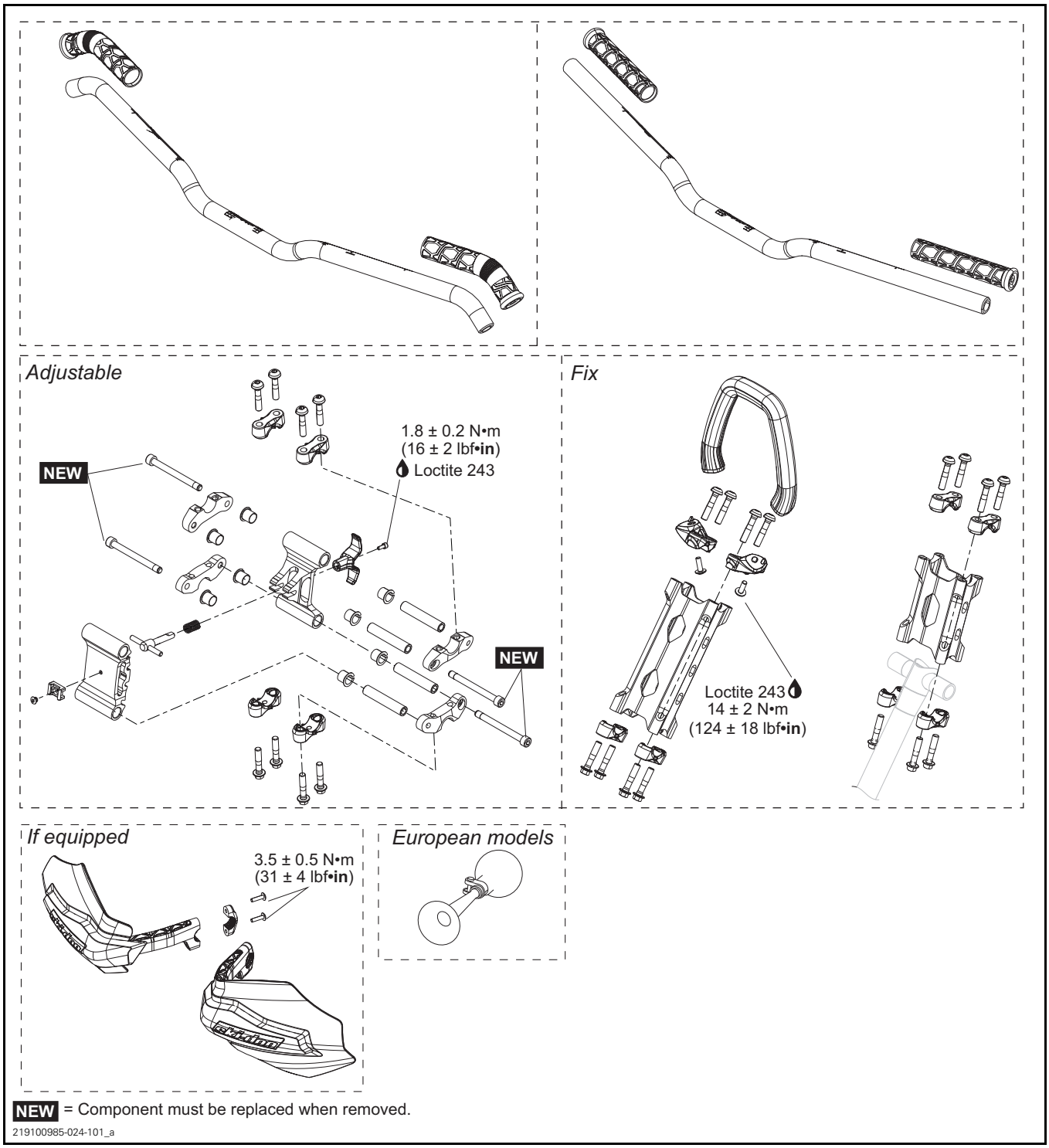
Adjustable
1.8 ± 0.2 N•m
(16 ± 2 lbf•in)
Loctite 243
NEW
NEW
Fix
Loctite 243
14 ± 2 N•m
(124 ± 18 lbf•in)
If equipped
3.5 ± 0.5 N•m
(31 ± 4 lbf•in)
European models
NEW = Component must be replaced when removed.
219100985-024-101_a

GENERAL

When removing or replacing a part of the steering mechanism, perform the steering alignment, refer to *ALIGNING THE STEERING* in this subsection.

During assembly/installation, use the torque values and service products as in the exploded views.

Clean threads before applying a threadlocker. Refer to *SELF-LOCKING FASTENERS* and *LOCTITE APPLICATION* at the beginning of this manual for complete procedure.

⚠ WARNING

Torque wrench tightening specifications must be strictly adhered to.
Locking devices when removed (e.g.: locking tabs, elastic stop nuts, cotter pins, etc.) must be replaced.

NOTICE **Hoses, cables and locking ties removed during a procedure must be reinstalled at the same location.**

ADJUSTMENT

ALIGNING THE STEERING

Ski alignment is performed by adjusting the length of left and right tie-rods.

1. Leave the vehicle on the ground on its own weight.
2. Attach ski handles together with a bungee cord.

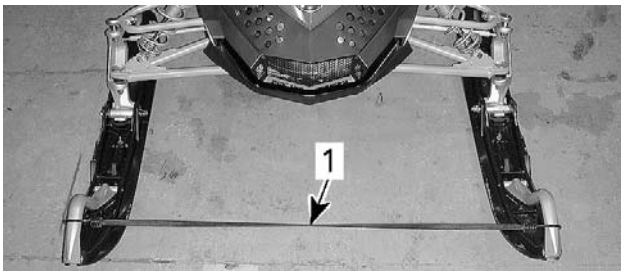

mmr2008-049-025_a

TYPICAL
1. Bungee cord

3. Position handlebar so that it is straight ahead position by measuring from the extremities of the grips to the rear most edge of the tunnel, as shown.

NOTE: The reference point must be the same to each side.

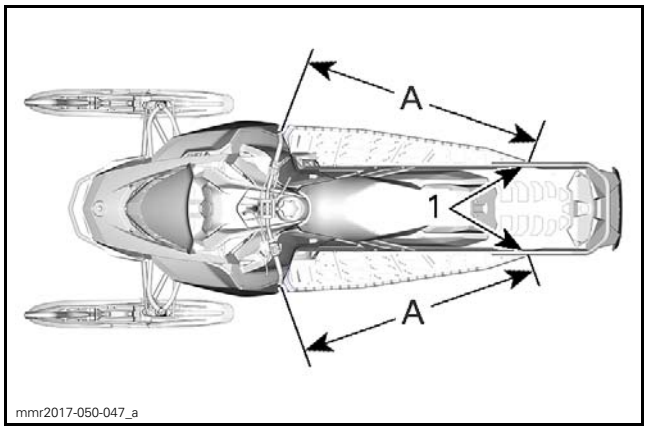

mmr2017-050-047_a

TYPICAL
1. Same reference point
A. Equal distance on each side

4. Ensure track is properly aligned.
5. Verify if skis are in straight-ahead position by placing a straight edge against track and measuring distance between front and rear ski bridges and straight edge.
6. With skis in straight ahead position, adjust the toe-out.
7. Measure the distance between front and rear ski bridges in line with arrows on skis.
8. Use the following illustration and this equation to determine the steering adjustment.

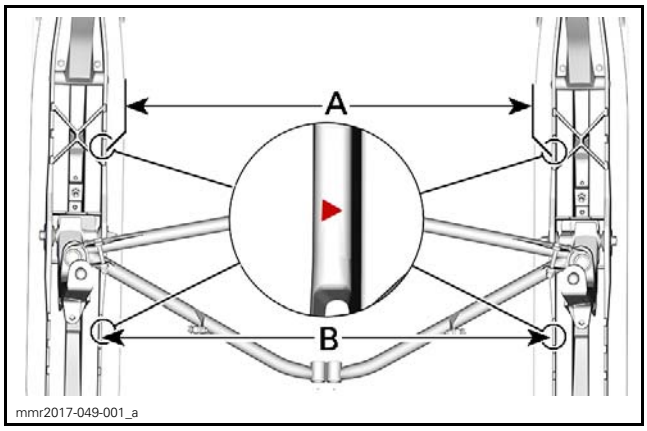

mmr2017-049-001_a

STEERING ALIGNMENT	
Toe-out	A – B = 5 mm (.197 in)

9. If adjustment is needed, loosen tie-rod jam nuts then turn tie-rods to change their length.

NOTE: There is no jam nut on the inner tie-rods.

10. Tighten jam nuts to specification.

TIGHTENING TORQUE	
Jam nut	18.5 N•m ± 3.5 N•m (164 lbf•**in** ± 31 lbf•**in**)

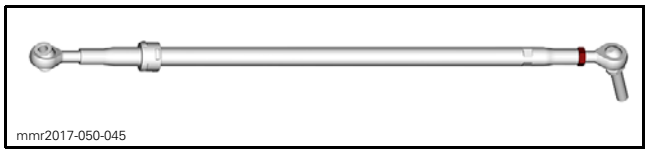
mmr2017-050-045

⚠ WARNING

The maximum tie-rod end length (A) not engaged in the tie rod must not exceed 34 mm (1.339 in).

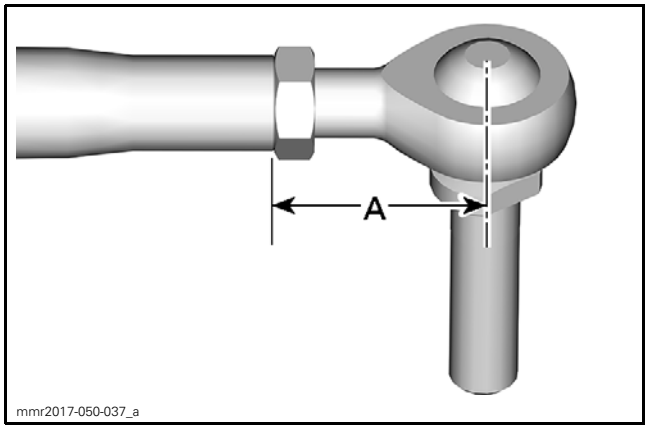

mmr2017-050-037_a

INSPECTION

INSPECTING THE SKI AND RUNNER

Lift the front of vehicle and check ski runners for wear or damage (missing or broken carbide). Replace if necessary.

Inspect ski for excessive wear or other damage. Replace if necessary.

Refer to *ADJUSTABLE RUNNER MECHANISM* in this subsection for adjustable ski mechanism inspection.

INSPECTING THE STEERING MECHANISM

Visually inspect steering mechanism for tightness of components (steering arms, tie rods, ski bolts, ski legs, etc.).

PROCEDURES

SKI RUNNER

Inspecting the Ski Runner

Refer to *INSPECTION*.

Removing the Ski Runner

Ski Without Adjustable Runner

1. Lift the front of vehicle and support it off the ground.
2. Unscrew the ski runner nuts, then remove the ski runner.

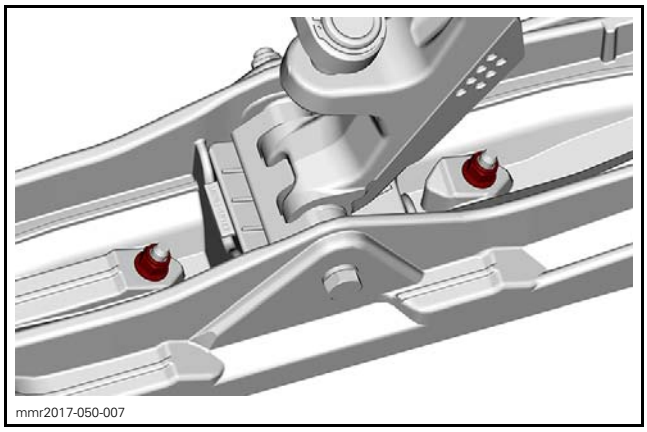
mmr2017-050-007

Ski With Adjustable Runner

1. Remove the ski.
2. Remove the pin.

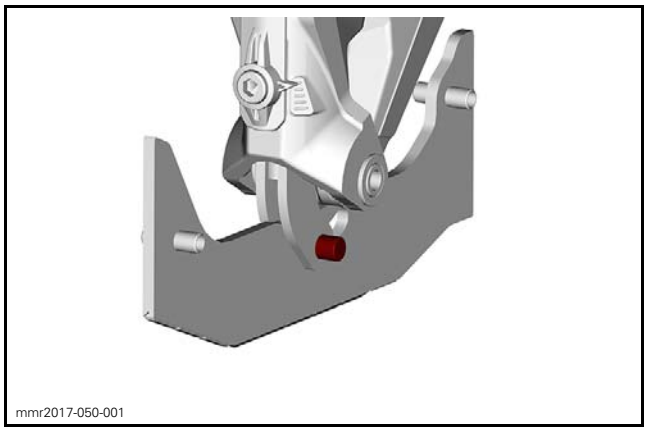
mmr2017-050-001

Installing the Ski Runner

The installation is the reverse of the removal procedure. Pay attention to the following.

Ski Without Adjustable Runner

Tighten ski runner nuts to specification.

TIGHTENING TORQUE	
Runner nut	8 N•m ± 1 N•m (71 lbf•**in** ± 9 lbf•**in**)

Ski With Adjustable Runner

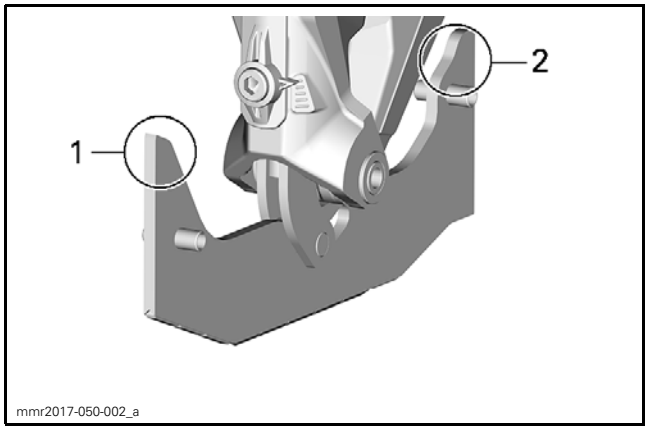

1. *Towards front*
2. *Towards rear*

SKIS

Inspecting the Ski

Refer to *INSPECTION*.

Removing the Ski

1. Lift front of vehicle and support it off ground.
2. Unscrew nut then pull ski bolt out.

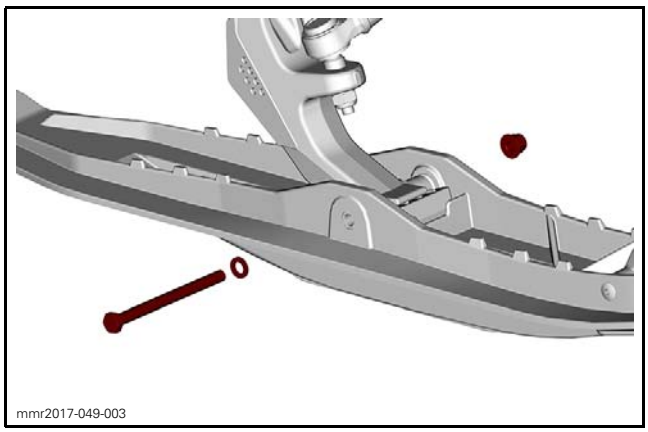

3. Remove ski from vehicle.

Installing the Ski - Without Adjustable Runner

Make sure bushings are installed in ski holes.

Install the ski stopper. Position indicator in front and make sure the bump in the ski is in the groove of the ski stopper.

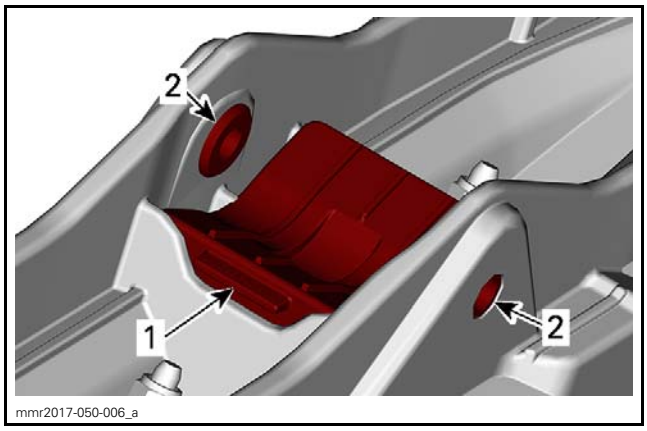

1. *Ski stopper*
2. *Bushings*

Apply grease on the ski axle.

SERVICE PRODUCT
SYNTHETIC SUSPENSION GREASE (P/N 779163)

Mountain Models

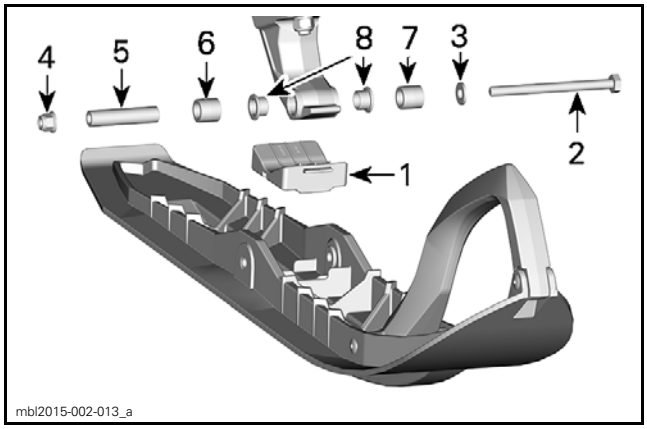

LH SIDE SHOWN
1. *Ski stopper*
2. *M10 x 130 screw*
3. *M10 flat washer*
4. *M10 flanged nut*
5. *Ski axel*
6. *Narrow adjustment*
7. *Wide adjustment*

Install the spacer inside for the narrower stance and outside for the wider stance.

⚠ WARNING

Proceed to the same setting for both skis.

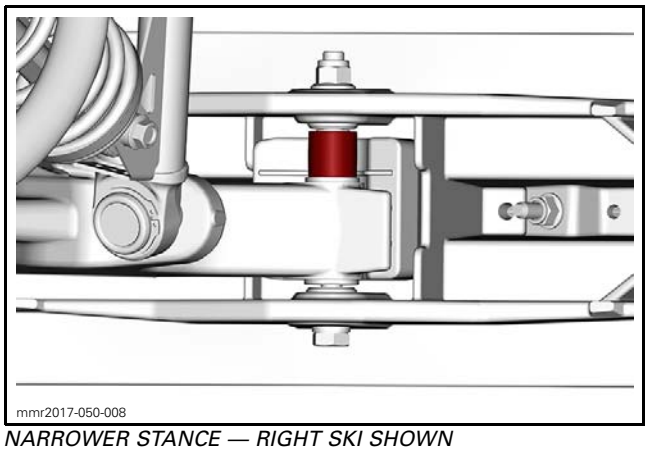

NARROWER STANCE — RIGHT SKI SHOWN

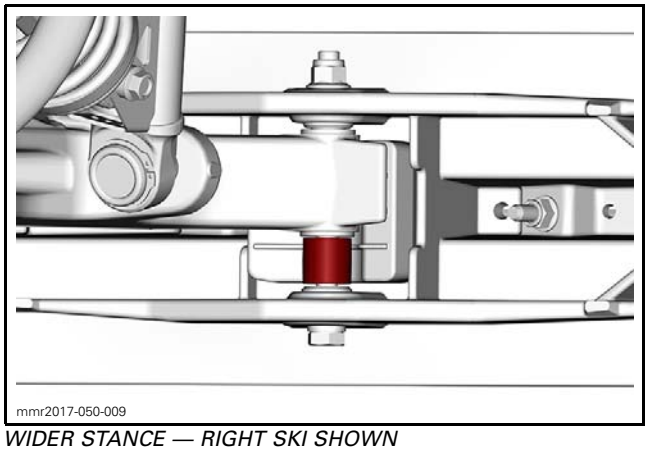

WIDER STANCE — RIGHT SKI SHOWN

Trail and Crossover Models

Install ski on ski leg as per the following illustrations.

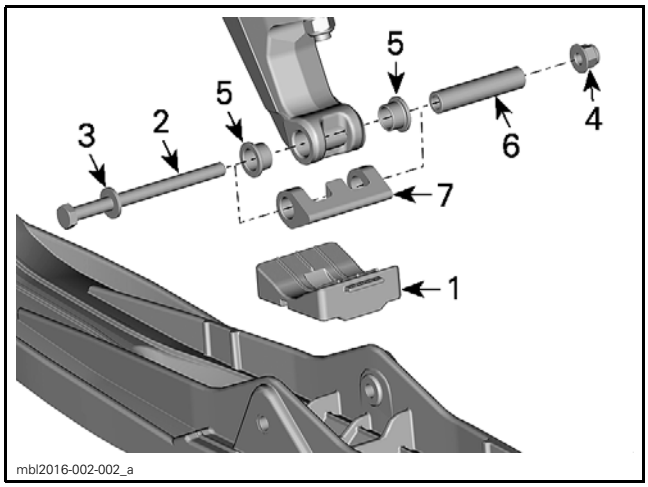

1. *Ski stopper*
2. *M10 x 130 screw*
3. *M10 flat washer*
4. *M10 flanged nut*
5. *Ski leg bushings*
6. *Ski Axle*
7. *Ski leg stopper*

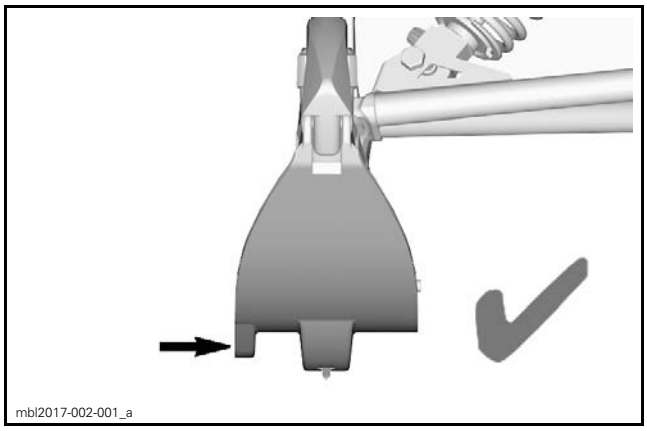

LATERAL SKI KEEL TOWARDS OUTSIDE (IF EQUIPPED) - CORRECT

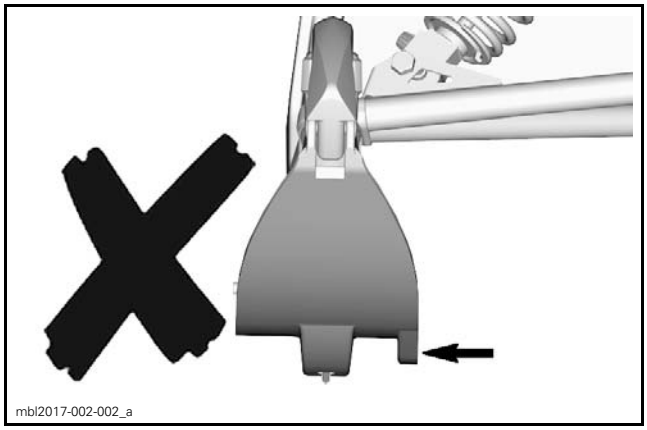

LATERAL SKI KEEL TOWARDS INSIDE (IF EQUIPPED) - NOT CORRECT

All Models

TIGHTENING TORQUE	
Ski nut	48 N•m ± 6 N•m (35 lbf•ft ± 4 lbf•ft)

Installing the Ski With Adjustable Runner

Make sure bushings are installed in ski holes.

Install the ski stopper.

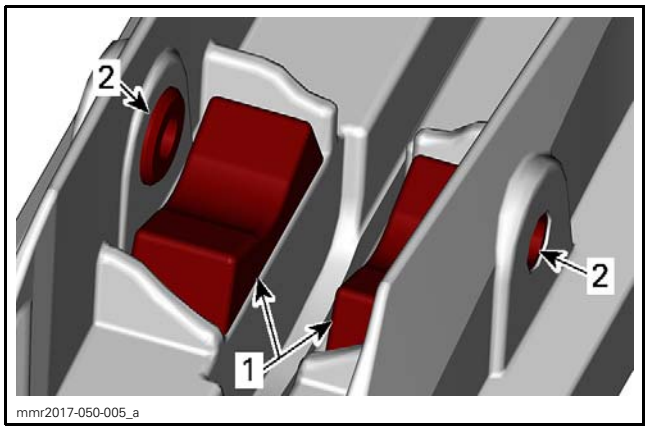

1. Ski stopper
2. Bushings

Install ski on ski leg as per the following illustrations.

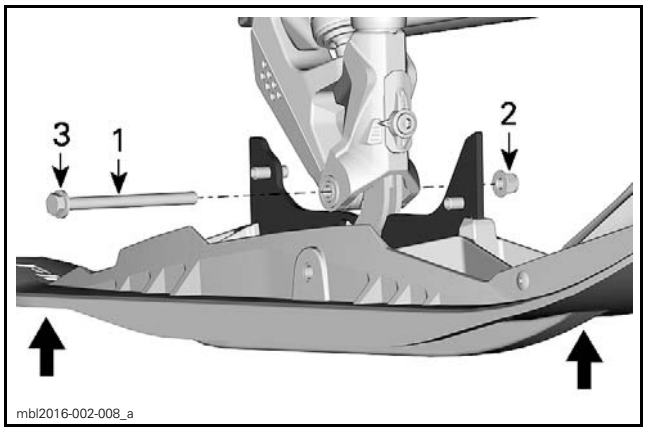

1. Ski screw
2. Nut
3. Washer

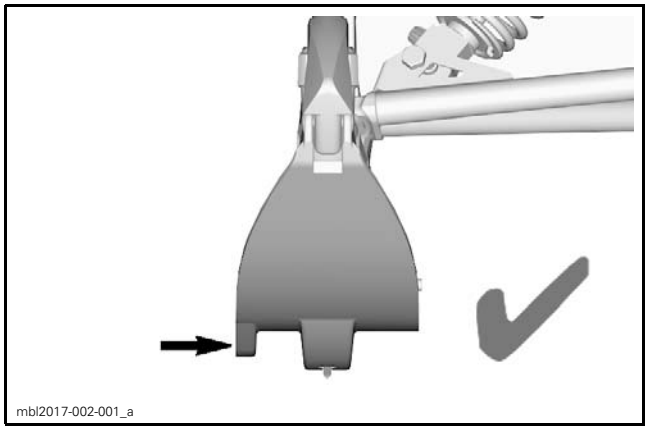

LATERAL SKI KEEL TOWARDS OUTSIDE (IF EQUIPPED) - CORRECT

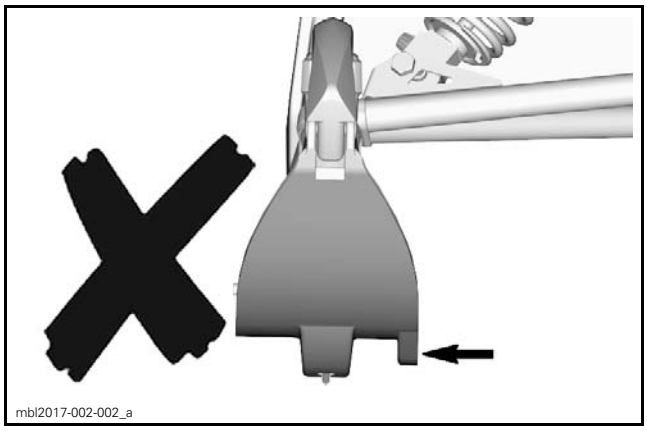

LATERAL SKI KEEL TOWARDS INSIDE (IF EQUIPPED) - NOT CORRECT

TIGHTENING TORQUE	
Ski nut	48 N•m ± 6 N•m (35 lbf•ft ± 4 lbf•ft)

ADJUSTABLE RUNNER MECHANISM

Removing the Adjustable Runner Mechanism

1. Remove the ski and the runner.
2. Slide the sleeve out of the ski leg.

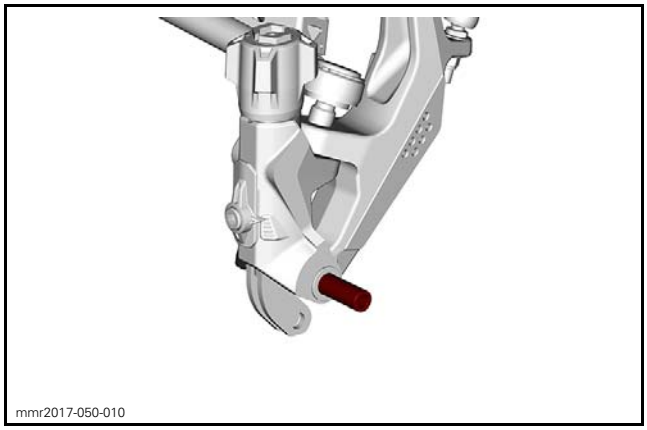

3. Remove the mechanism from the ski leg.

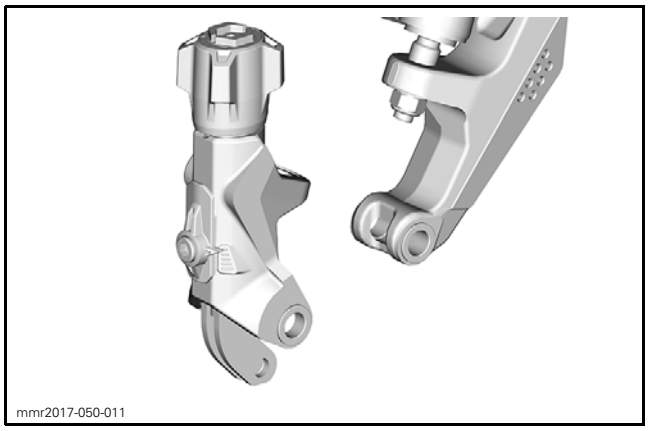

Disassembling the Adjustable Runner Mechanism

1. Remove the adjusting knob and the indicator screws.

NOTE: There are two O-rings on the indicator screw.

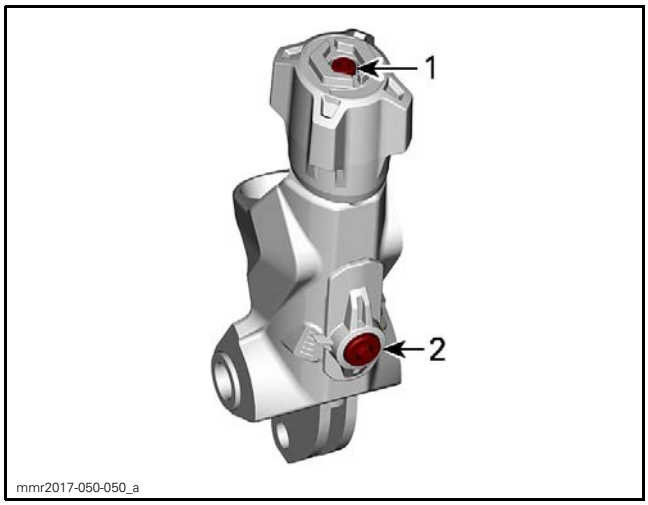

1. Adjusting knob screw
2. Indicator screw

2. Slide the adjusting screw and the adjusting shaft out of the body.

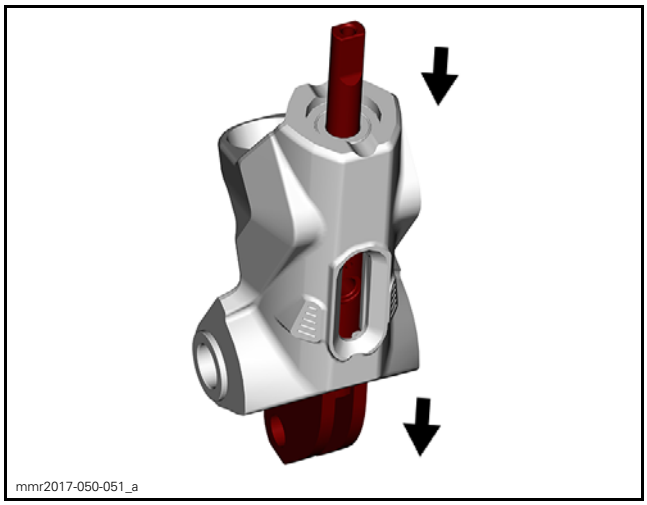

3. Remove the screw from the shaft.

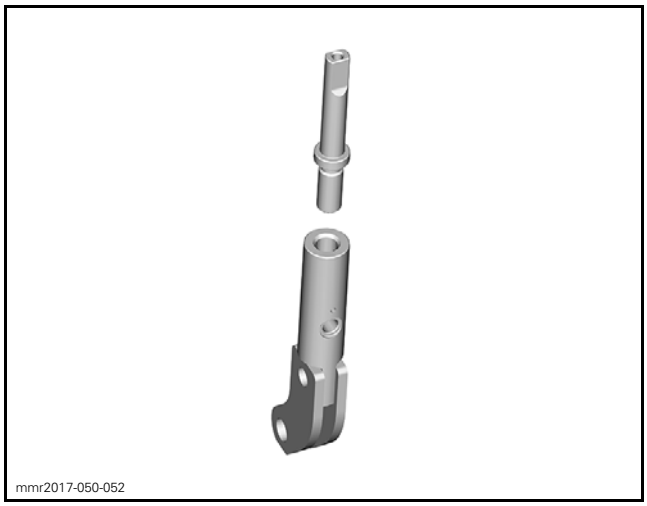

4. Clean the screw and the shaft inner threads with brake and parts cleaner and a small brush.

SERVICE PRODUCT
XPS BRAKES AND PARTS CLEANER (USA) (P/N 219 701 705) or XPS BRAKES AND PARTS CLEANER (P/N 219 701 776)

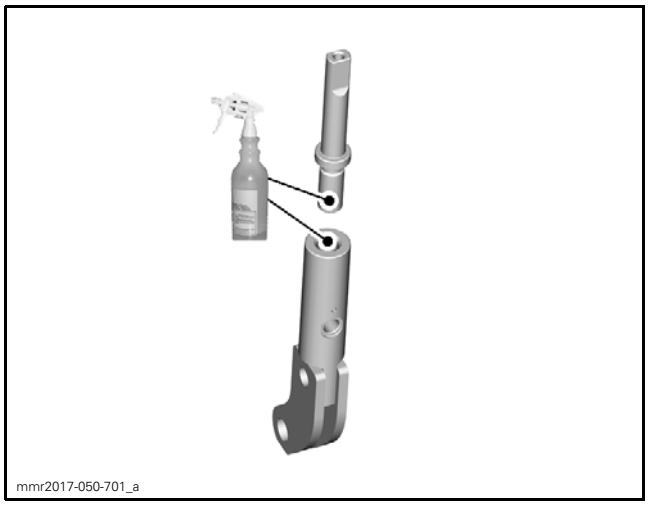

5. Remove the snap ring.

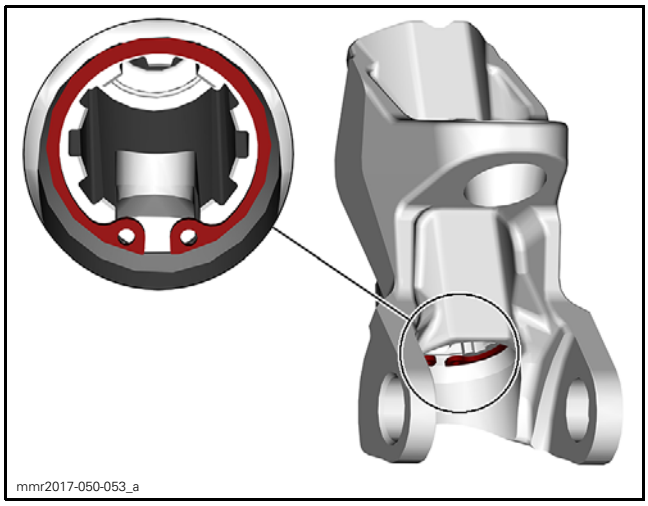

6. Slide the sleeve out of the body.

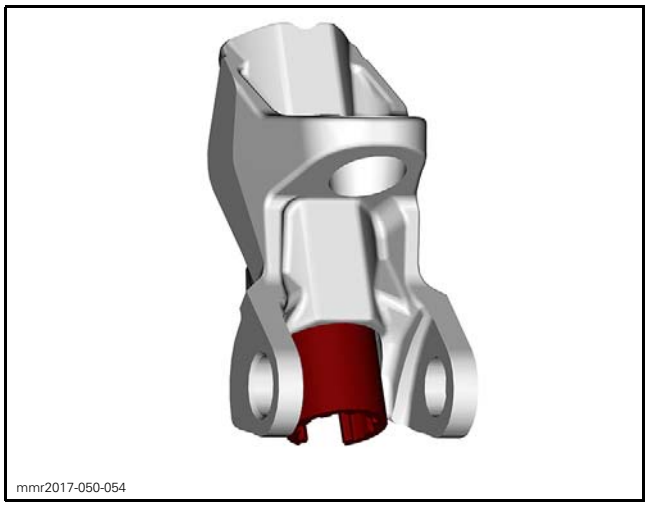

Inspecting the Adjustable Runner Mechanism

Inspect the mechanism body for cracks. Replace if required.

Inspect the adjusting screw and shaft for:
- Thread damages
- Bending.

Replace if required.

Inspect the sleeve for:
- Cracks
- Spline damages

Replace if required.

Inspect the ball bearing. It should turn freely and smoothly. If bearing needs to be replaced, replace the mechanism assembly.

Assembling the Adjustable Runner Mechanism

The assembly is the reverse of the disassembly procedure. However, pay attention to the following.

Apply grease on screw thread and shaft inner thread.

SERVICE PRODUCT
SYNTHETIC GREASE (P/N 779162)

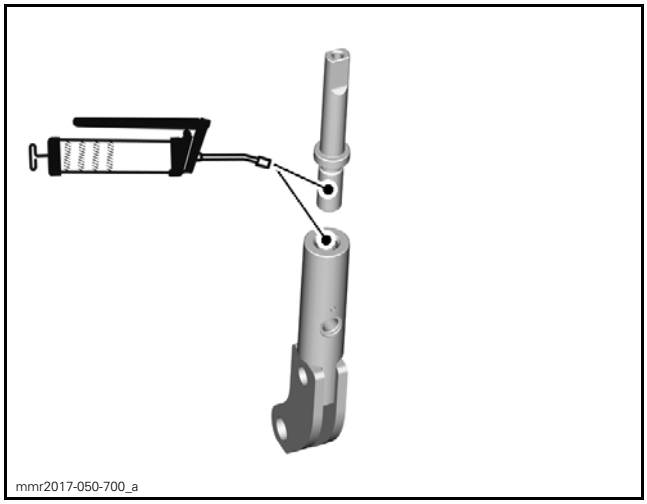

Install a new knob screw.

TIGHTENING TORQUE	
Adjusting knob screw	9 N•m ± 1 N•m (80 lbf•**in** ± 9 lbf•**in**)
Indicator screw	24.5 N•m ± 3.5 N•m (18 lbf•ft ± 3 lbf•ft)

Installing the Adjustable Runner Mechanism

The installation is the reverse of the removing procedure. However, pay attention to the following.

Install rubber grommet on nut first. Align flat against flat.

Ensure all bushings, and the grommet are in place and fully seated.

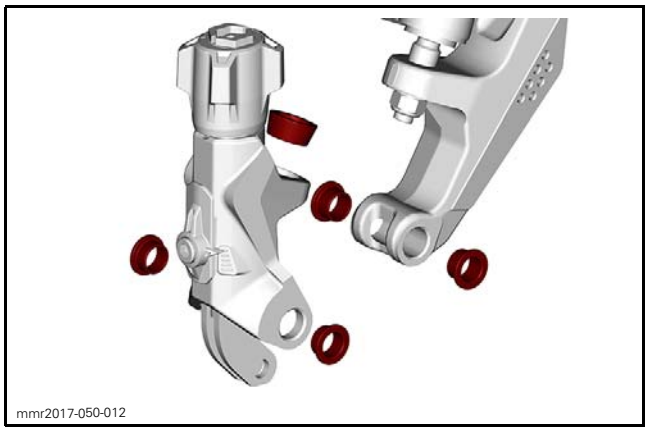

The mechanism is offset and has to be installed on the correct side.

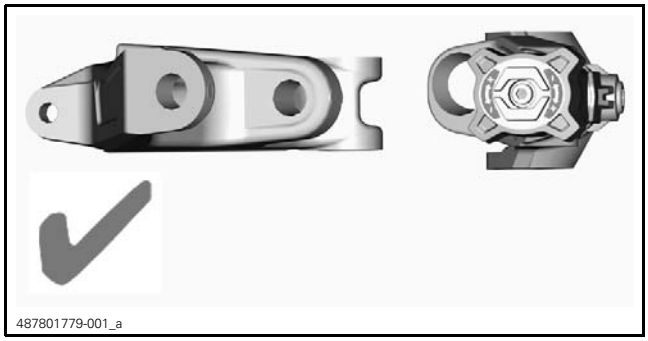

RH SIDE SHOWN

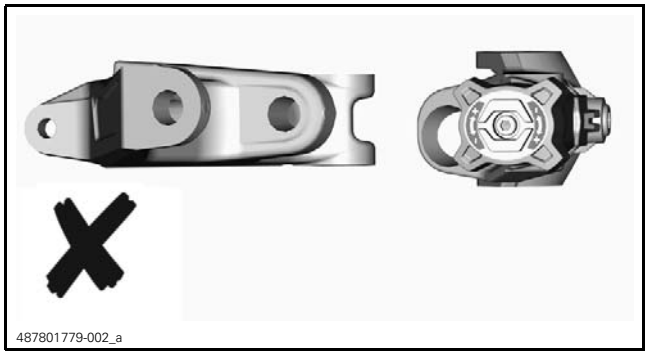

RH SIDE SHOWN

SKI HANDLES

Removing the Ski Handle

1. Remove ski from vehicle.
2. Using a 9 mm (3/8 in) drill bit, remove ski handle rivets. Only drill the head of rivet. Do not try to drill all the way through the rivet. Angle the drill bit to reduce the chance of spinning the rivet in the ski.
3. Remove handle from ski.
4. Place handle in hot water for 10 minutes then using a punch, drive the inner part of rivet out of handle.

Installing the Ski Handle

1. To install rivets, use a C-clamp and a short 10 mm socket.
2. Place a rivet in position and insert it into ski and ski handle. Repeat the procedure for the other side.

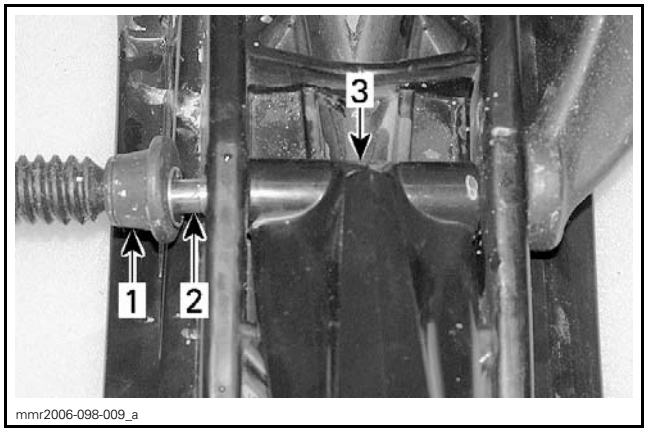

1. *C-clamp*
2. *Rivet*
3. *Handle*

3. When both rivets are installed, use the short 10 mm socket to push rivet heads against the ski.

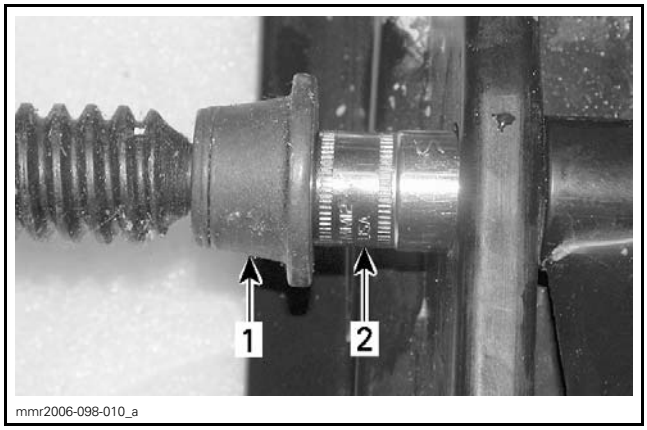

1. *C-clamp*
2. *10 mm socket*

SKI FLOTATION EXTENSION (MOUNTAIN MODELS)

Condition Utilization

The key to the adjustable nose is to reduce the tip-hop that can slow down the vehicle.

In snow conditions with less than 41 cm (16 in) of fresh powder, specially when there is a crust, the narrow tip stays in the snow - which helps to maintain a carve. Also, when side hilling, and crossing a snowmobile rut, the narrow shape moves the impact point - where a change in snow density acts to tip-up the ski - more towards the spindle. This reduces kick back by 50% compared to the wider configuration, minimizing its impact on the attitude of the snowmobile holding a side hill.

In snow conditions with more than 41 cm (16 in) of fresh powder, the wider tip configuration is desirable, as it increases flotation and will bring the nose of the snowmobile up.

Removing the Ski Flotation Extension

1. Remove nuts and screws securing the extension to ski.

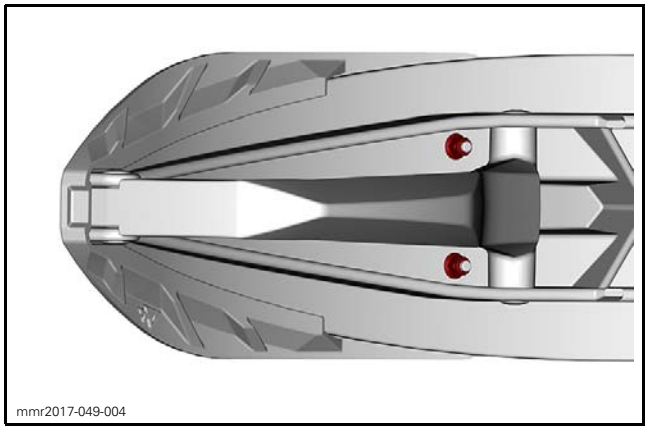
mmr2017-049-004

2. Slide the extension off the ski.

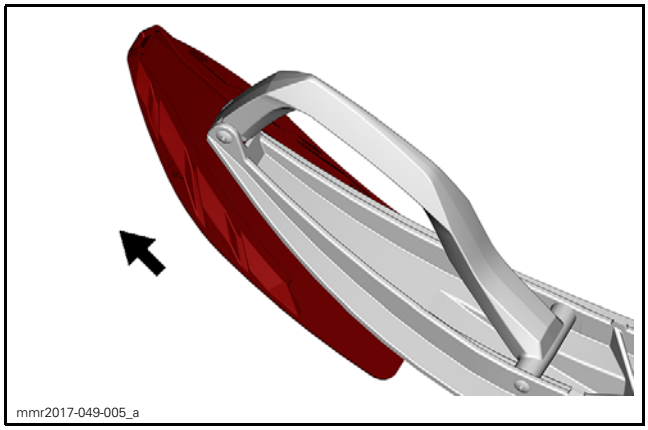
mmr2017-049-005_a

Installing the Ski Flotation Extension

The installation is the reverse of the removal procedure. However, pay attention to the following.

1. Install extension nuts towards up and tighten to specification.

TIGHTENING TORQUE	
Extension nuts	3 N•m ± 0.5 N•m (27 lbf•**in** ± 4 lbf•**in**)

SKI LEG

To replace a ski leg, refer to *FRONT SUSPENSION* subsection.

HANDLEBAR GRIP

To verify or replace heating elements, refer to *ACCESSORIES* subsection.

Removing the Handlebar Grip

Remove grips by pulling while using compressed air, which will inflate or loosen the fit between the grip and handlebar.


mmr2015-143-007

Installing the Handlebar Grip

Insert the handlebar grip on handlebar while blowing compressed air to inflate or loosen the fit between grip and handlebar.

MULTIFUNCTION SWITCH

Removing the Multifunction Switch (Mountain models)

1. Remove the upper body module. Refer to *BODY* subsection.
2. Disconnect the multifunction switch connector (2-pin connector).

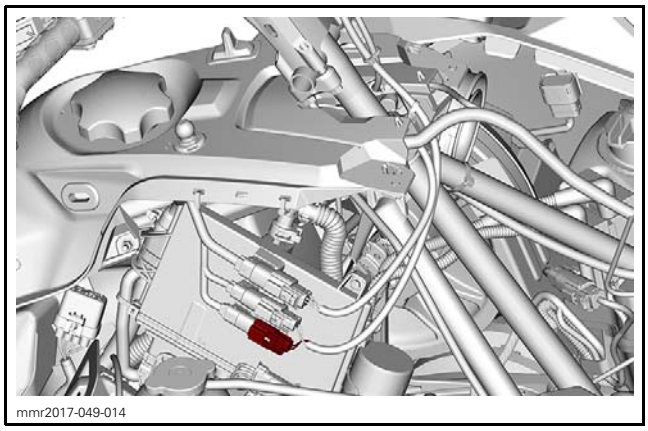
mmr2017-049-014

3. Cut locking ties securing multifunction switch harness.

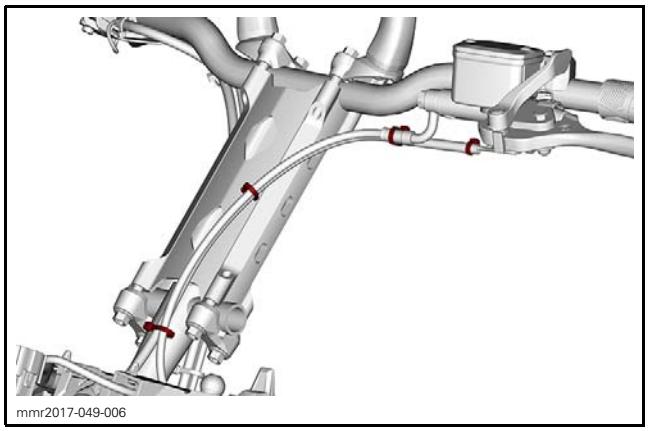
mmr2017-049-006

4. Remove multifunction switch screws.

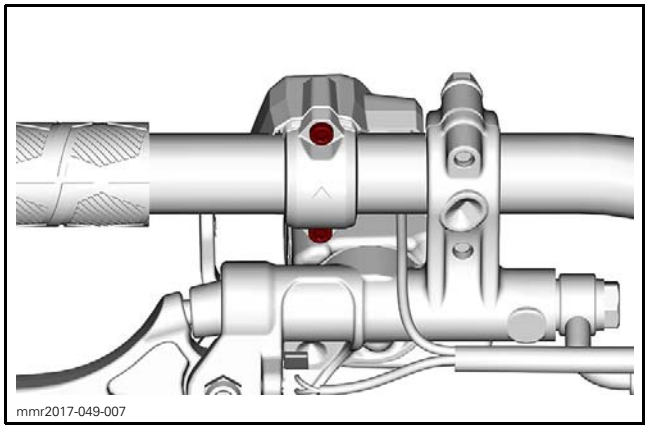
mmr2017-049-007

5. Remove multifunction switch from vehicle.

Removing the Multifunction Switch (Trail and Crossover models)

1. Remove the gauge support. Refer to *BODY* subsection.
2. Disconnect the multifunction switch connector.

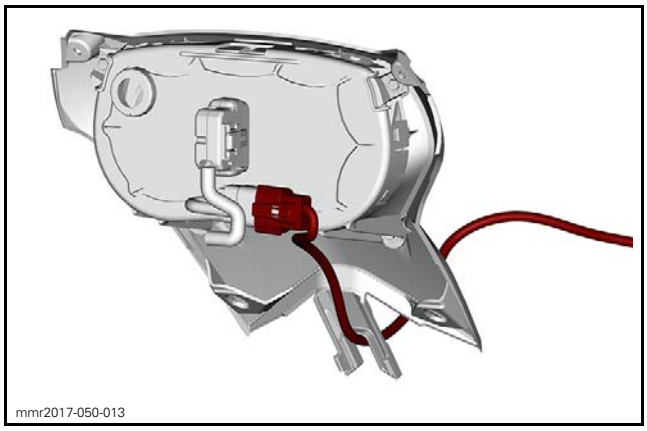
mmr2017-050-013

3. Cut locking ties securing multifunction switch harness.

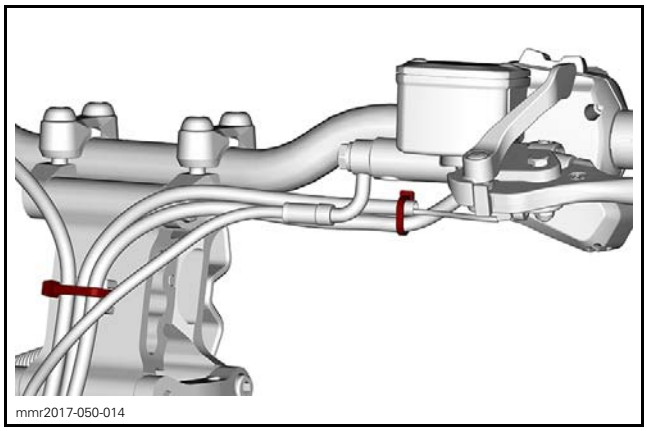
mmr2017-050-014

4. Unscrew master cylinder from handlebar.

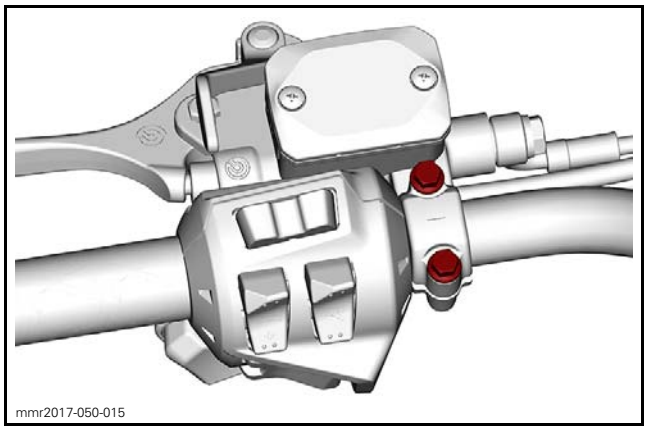
mmr2017-050-015

5. Remove master cylinder.

NOTICE **Do not let master cylinder hang by the hose and do not stretch or twist the hose.**

6. Remove multifunction switch screws.

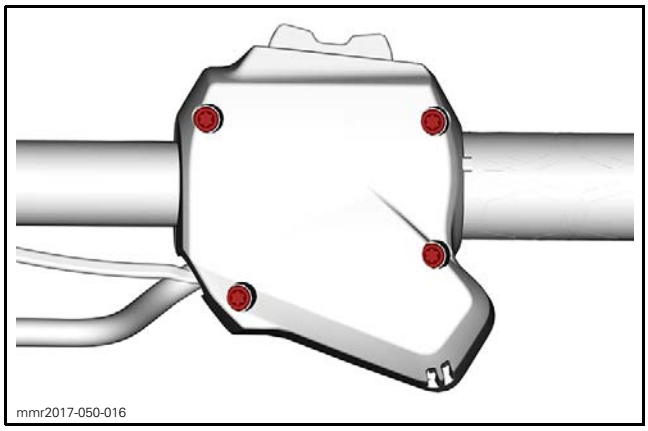

7. Remove multifunction switch from vehicle.

Installing the Multifunction Switch (Mountain models)

The installation is the reverse of the removal procedure. However, pay attention to the following.

Install the multifunction switch clamp with the arrow towards rear.

Tighten multifunction switch screws to specification as per the following sequence.

TIGHTENING TORQUE	
Multifunction switch screws	2.4 N•m ± 0.2 N•m (21 lbf•**in** ± 2 lbf•**in**)

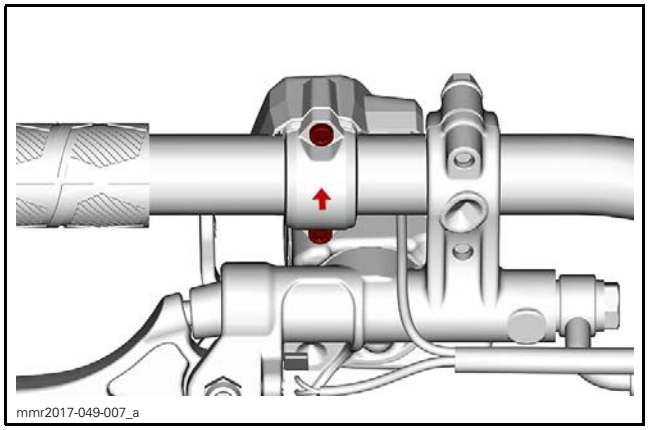

Turn handlebar completely from side to side making sure it does not exert unwanted tension on handlebar wires.

Installing the Multifunction Switch (Trail and Crossover Models)

The installation is the reverse of the removal procedure. However, pay attention to the following.

Tighten the multifunction switch screws to specification, as per the following sequence.

TIGHTENING TORQUE	
Multifunction switch screw	2.4 N•m ± 0.2 N•m (21 lbf•**in** ± 2 lbf•**in**)

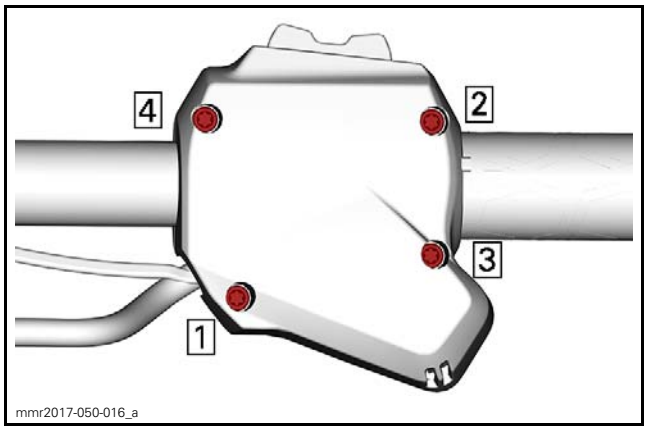

TRAIL AND CROSSOVER MODELS

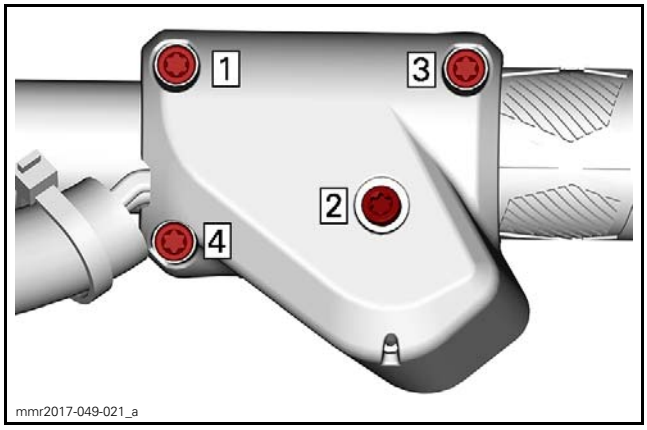

MOUNTAIN MODELS

Place the master cylinder on the handlebar.

Install master cylinder retaining clamp with its arrow pointing toward the front of vehicle.

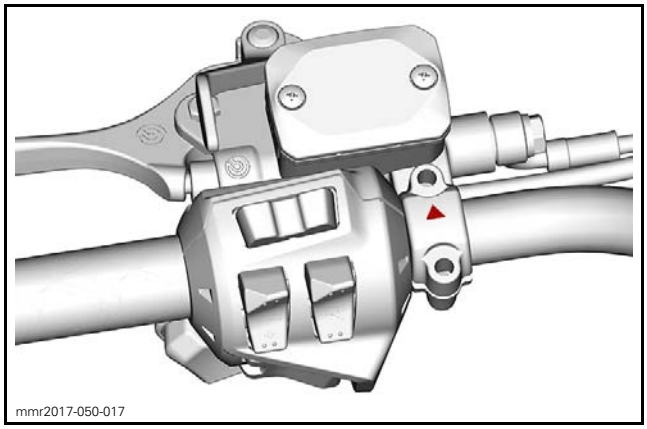

Install master cylinder clamp screws and tighten loosely.

With the handlebar in the straight ahead position, place the reservoir parallel to the ground.

Tighten master cylinder clamp screws to specification.

TIGHTENING TORQUE	
Master cylinder clamp screws	9 N•m ± 1 N•m (80 lbf•**in** ± 9 lbf•**in**)

Turn handlebar completely from side to side making sure it does not exert unwanted tension on handlebar wires.

THROTTLE LEVER HOUSING

Removing the Throttle Lever Housing

1. Remove the upper body module. Refer to *BODY* subsection.
2. Cut the harness locking ties.

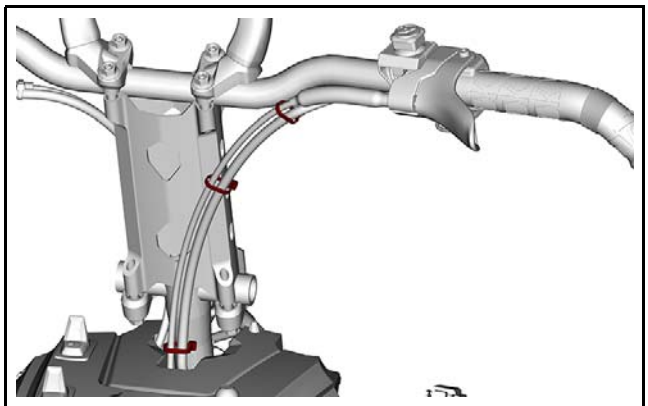
mmr2017-049-008

3. Disconnect the LH heater element connector (6-pin connector).

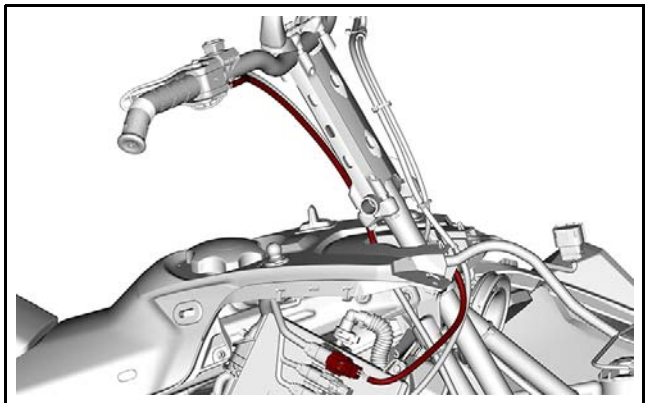
mmr2017-049-009

4. Remove the heater element wire terminals from connector. Refer to *WIRING HARNESS AND CONNECTORS* subsection.

NOTICE **Take note of exact positioning of multifunction wire before removing it from the connector.**

5. Disconnect throttle cable from throttle lever.
6. Remove both throttle lever pivot screws.

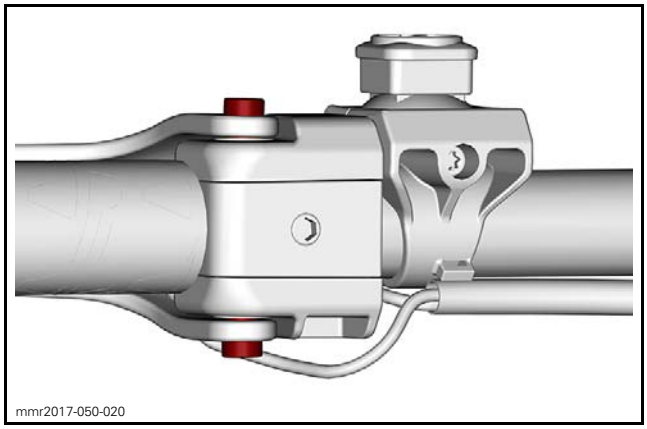
mmr2017-050-020

7. Loosen the emergency stop switch screw and slide the switch towards center of handlebar.

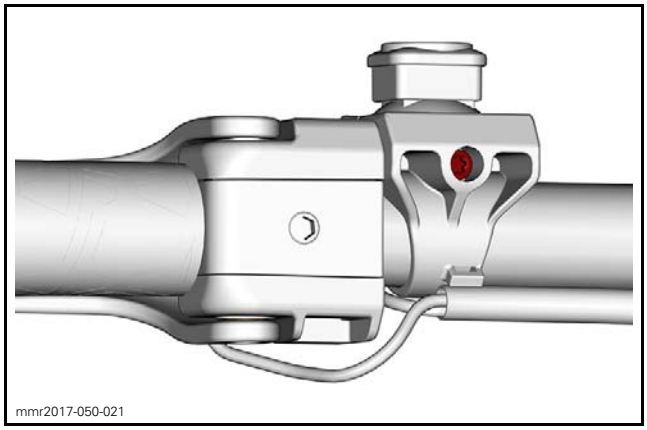
mmr2017-050-021

8. Pull the heater element wire out of the throttle lever housing.

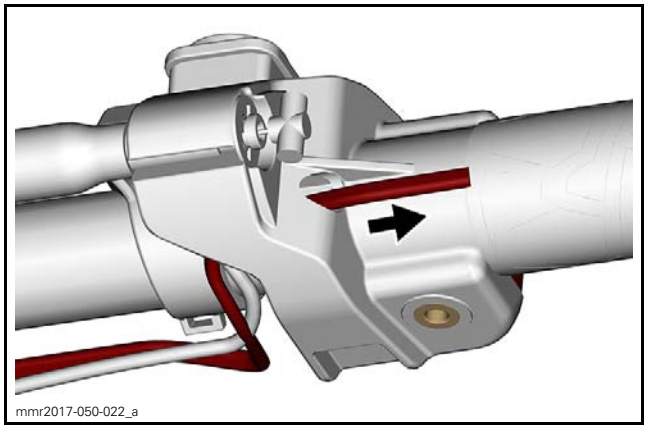
mmr2017-050-022_a

9. Remove throttle cable circlip.

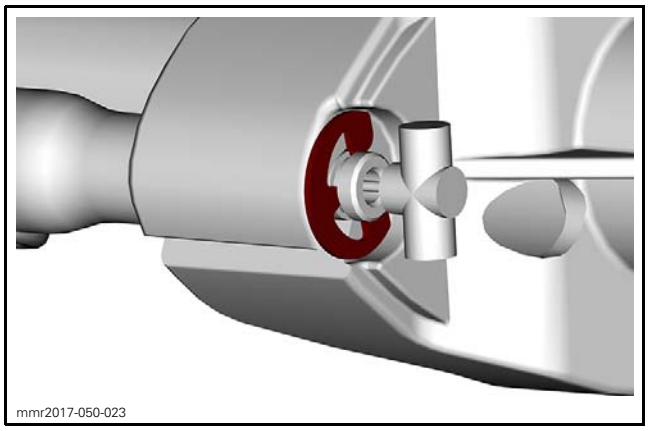

10. Remove the throttle cable from the housing.
11. Loosen throttle lever housing retaining screw.

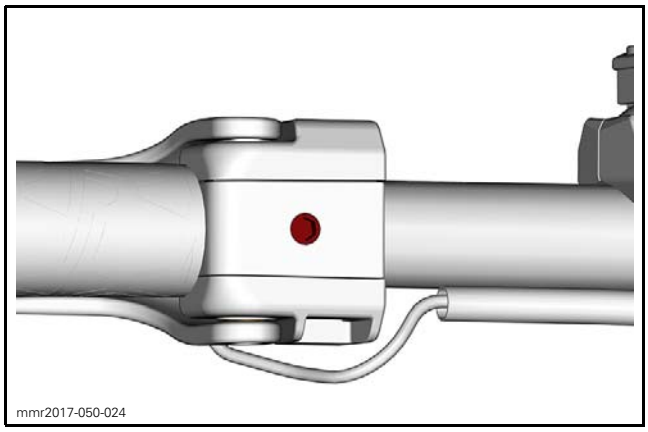

12. Insert a flat screwdriver between the housing and the clamp to release the tab.

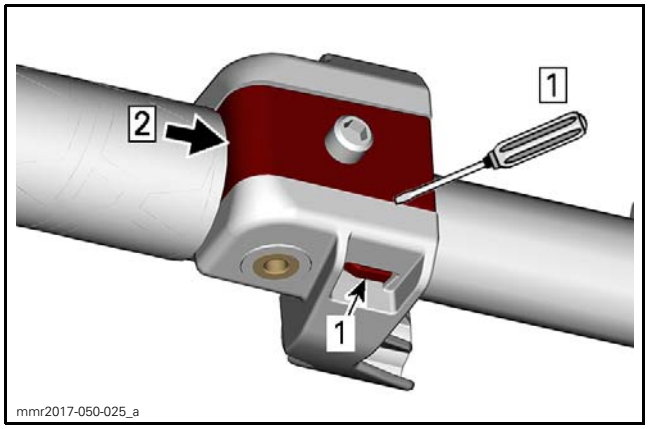

1. Tab

13. Slide the clamp out of the housing

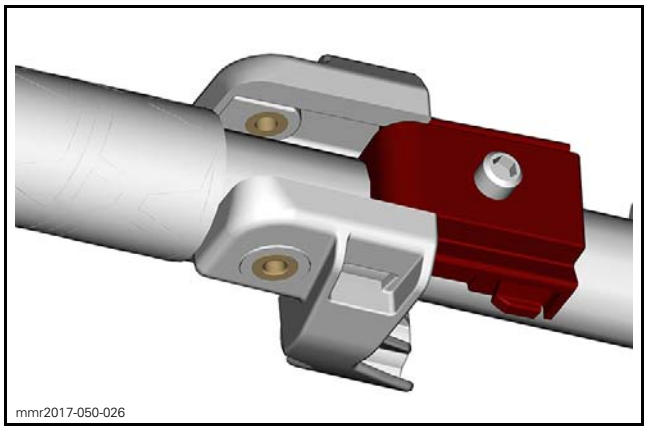

14. Remove throttle lever housing from handlebar.

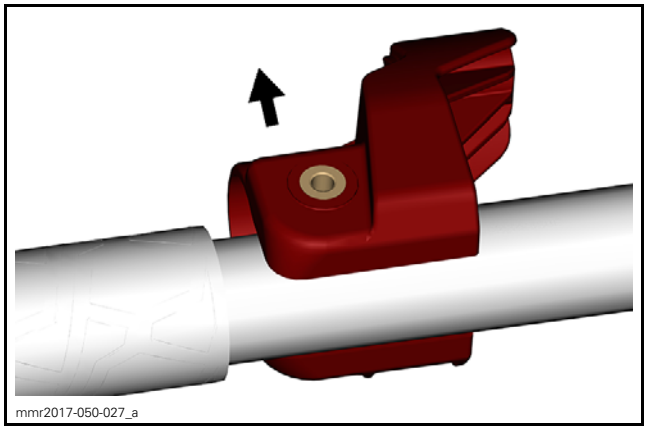

Installing the Throttle Lever Housing

The installation is the reverse of the removal procedure. However, pay attention to the following.

Tighten throttle lever pivot screws to specification.

TIGHTENING TORQUE	
Throttle lever retaining screws	1.5 N•m ± 0.2 N•m (13 lbf•**in** ± 2 lbf•**in**)

Turn handlebar completely from side to side making sure it does not exert unwanted tension on handlebar wires.

THROTTLE LEVER

Removing the Throttle Lever

1. Remove the upper body module. Refer to *BODY* subsection.
2. Cut the harness locking ties.

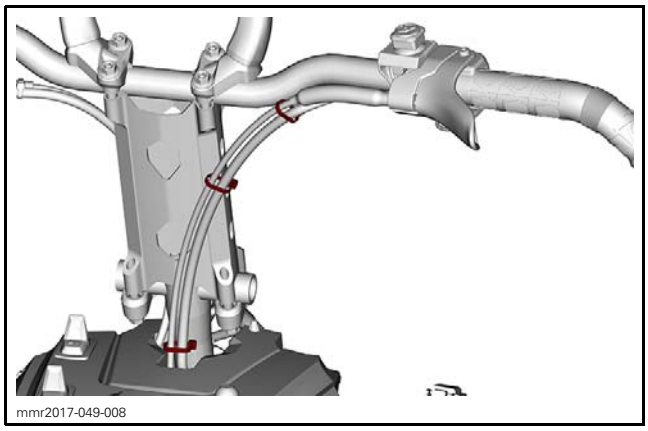
mmr2017-049-008

3. Disconnect the LH heater element connector.

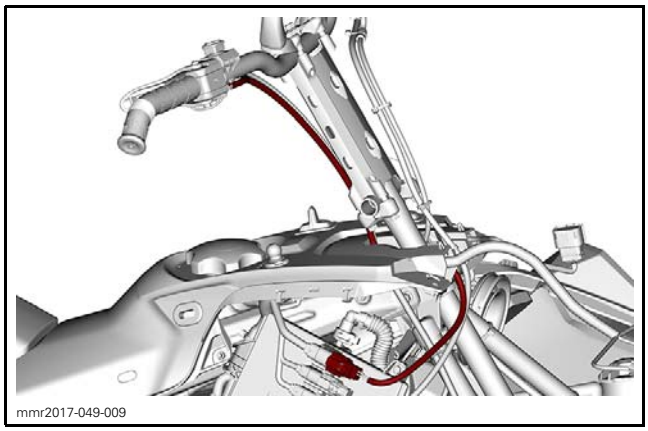
mmr2017-049-009

4. Remove throttle lever heater wire terminals from connector. Refer to *CONNECTOR INFORMATION* subsection.

NOTICE **Take note of exact positioning of throttle lever heater before removing it from the connector.**

5. Disconnect throttle cable from throttle lever.
6. Remove throttle lever pivot screws.

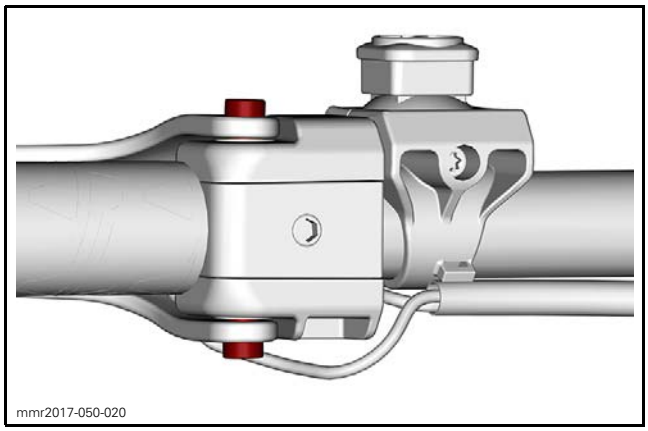
mmr2017-050-020

7. Remove throttle lever and heater wires.

Installing the Throttle Lever

The installation is the reverse of the removal procedure. However, pay attention to the following.

Tighten throttle lever pivot screws to specification.

TIGHTENING TORQUE	
Throttle lever pivot screws	1.5 N•m ± 0.2 N•m (13 lbf•**in** ± 2 lbf•**in**)

Turn handlebar completely from side to side making sure it does not exert unwanted tension on handlebar wires.

HANDLEBAR

Removing the Handlebar

NOTE: If the handlebar must be changed, remove all components (handlebar grip, throttle lever housing, etc.) before removing it from vehicle.

1. Remove handlebar retaining clamp screws.

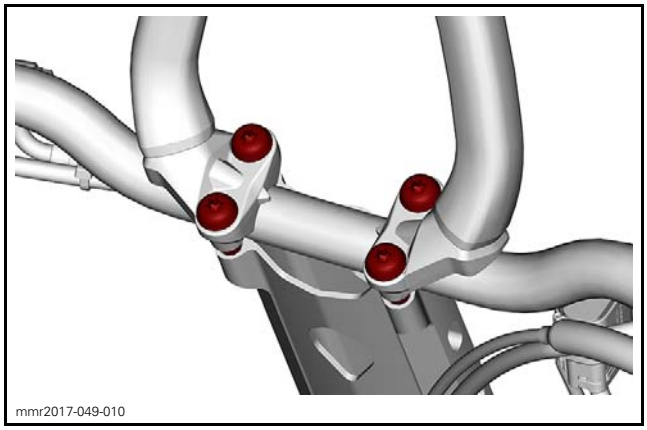
mmr2017-049-010

2. Remove handlebar from handlebar extension.

Inspecting the Handlebar

1. Inspect the handlebar for:
   – Damages
   – Cracks
   – Bending.
2. Replace if any of these problems is detected.

⚠ WARNING

Do not try to repair a defective handlebar.

3. Check handlebar clamps for cracks or distortion, replace if necessary.

Installing the Handlebar

The installation is the reverse of the removal procedure. However, pay attention to the following.

With Adjustable Handlebar

Position the handlebar at +2 with clamps.

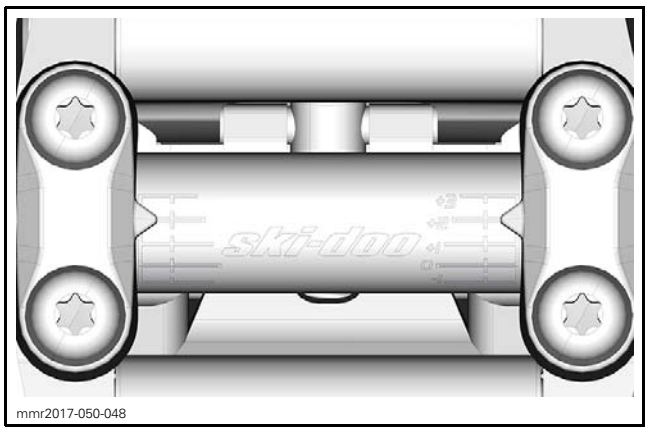

Without Adjustable Handlebar

Position the handlebar with clamps, as per the following table.

MODEL	HANDLEBAR POSITION
Mountain	0
Trail and crossover	+1

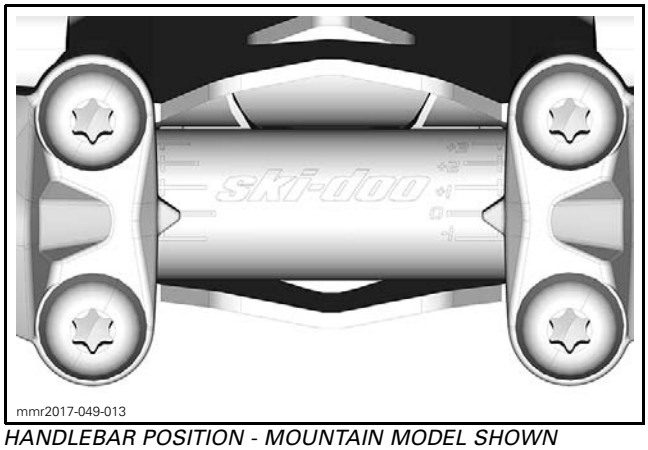

HANDLEBAR POSITION - MOUNTAIN MODEL SHOWN

Tighten handlebar clamps screws to specification.

TIGHTENING TORQUE	
Clamp screws	24.5 N•m ± 3.5 N•m (18 lbf•ft ± 3 lbf•ft)

Ensure handlebar clamps are parallel with handlebar extension.

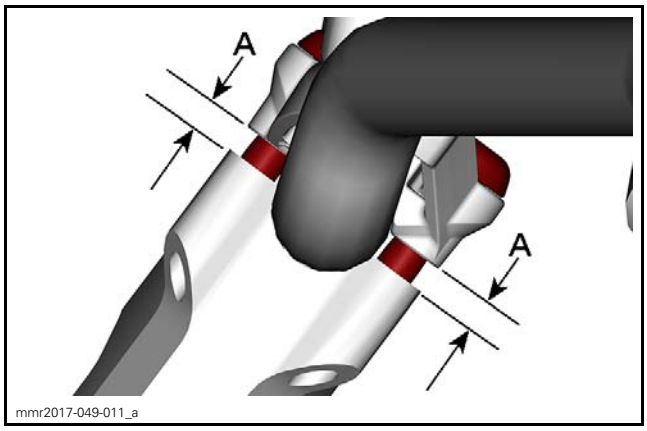

A. Must be equal on each side

Turn handlebar completely from side to side making sure it does not exert unwanted tension on handlebar wires.

HANDLEBAR EXTENSION

Removing the Handlebar Extension

1. Proceed with *REMOVING THE HANDLEBAR*, see procedure in this subsection.
2. Remove screws retaining the extension to steering column.

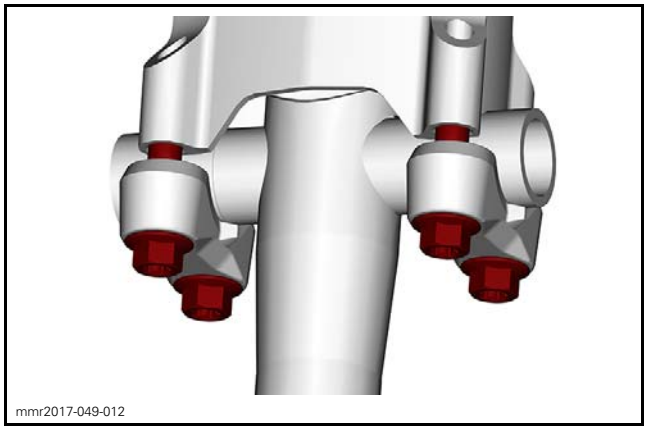

3. Remove handlebar extension from vehicle.

Inspecting the Handlebar Extension

1. Check handlebar extension for:
   – Cracks
   – Bending
   – Other damages.
2. Replace if any of these problems is detected.

⚠ WARNING

Do not try to repair a defective handlebar extension.

Installing the Handlebar Extension

The installation is the reverse of the removal procedure. However, pay attention to the following.

With Adjustable Handlebar

Position the extension in order to have the handlebar horizontal.

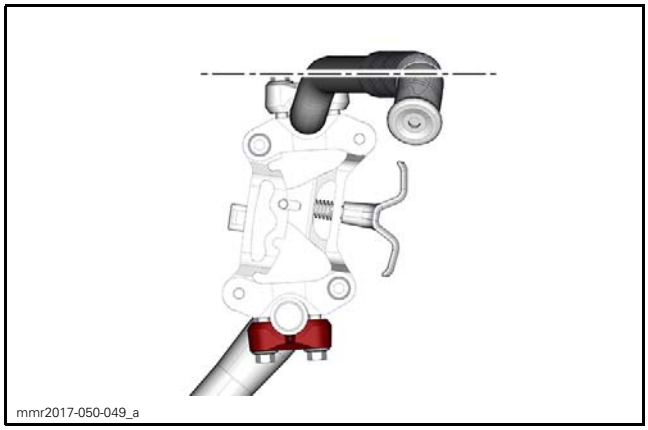

Without Adjustable Handlebar

Position the extension with the steering column, as per the following table.

MODEL	HANDLEBAR EXTENSION POSITION ANGLE
Mountain	180°
Trail and crossover	159°

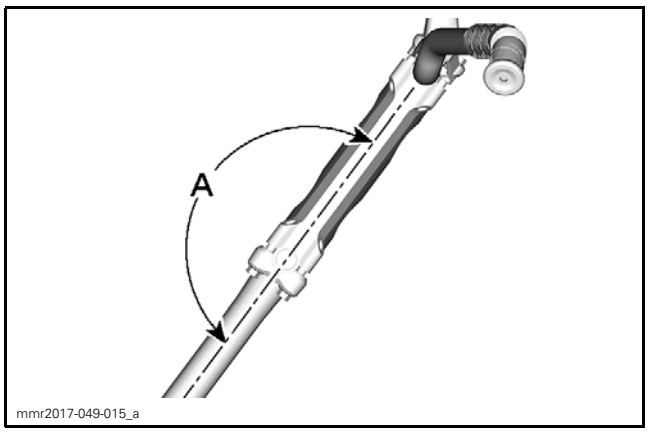

MOUNTAIN MODELS

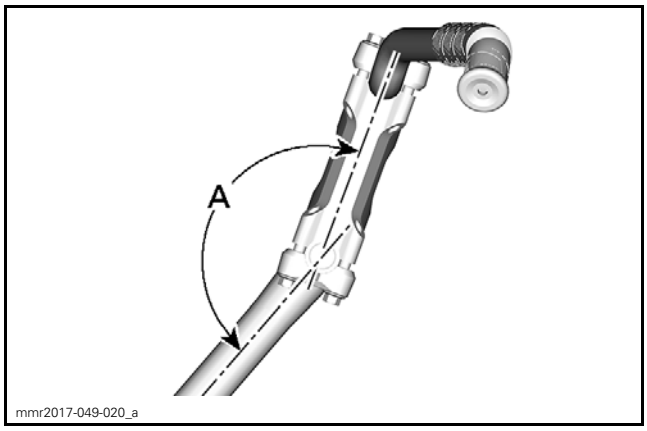

TRAIL AND CROSSOVER MODELS

Ensure extension clamps are parallel with handlebar extension.

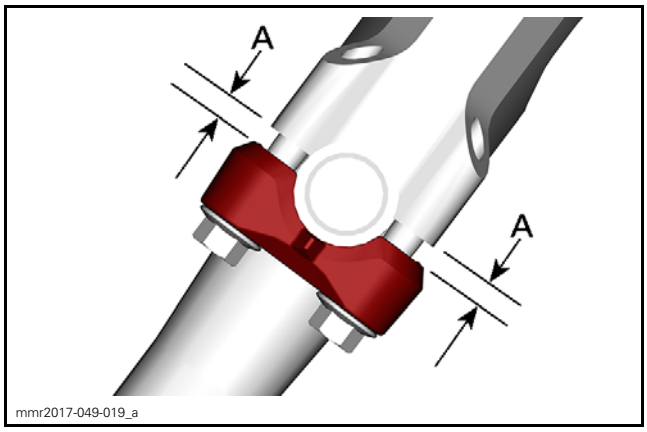

A. Must be equal on each side

⚠ WARNING

Handlebar and it's components must not get in contact with anything (windshield, fuel tank cap, etc.) when steering is turned.

TIE-RODS

NOTE: The same procedure is applied on RH and LH side.

Inspecting the Tie-Rod

Check tie-rod ends for looseness. If play is excessive, replace tie-rod.

Check if the tie-rod is bent, cracked or otherwise damaged. Replace if necessary.

Removing the Tie-Rod

1. Remove the tuned pipe. Refer to *EXHAUST SYSTEM* subsection.
2. Remove the tie-rod end nuts and screws from the steering column and ski leg.

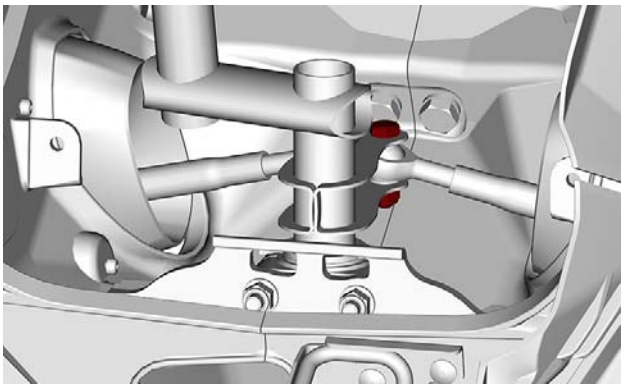

STEERING COLUMN WITH PITMAN ARM

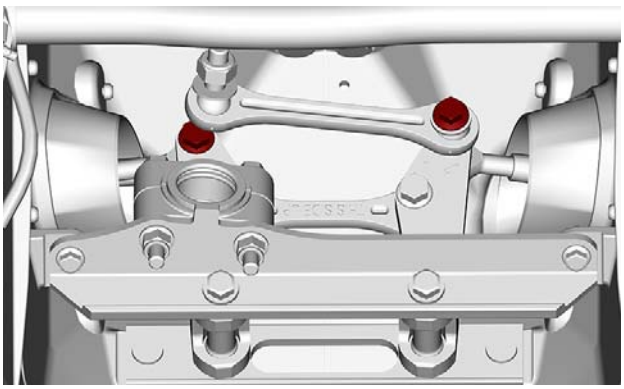

STEERING RACK - STEERING COLUMN REMOVED FOR CLARITY

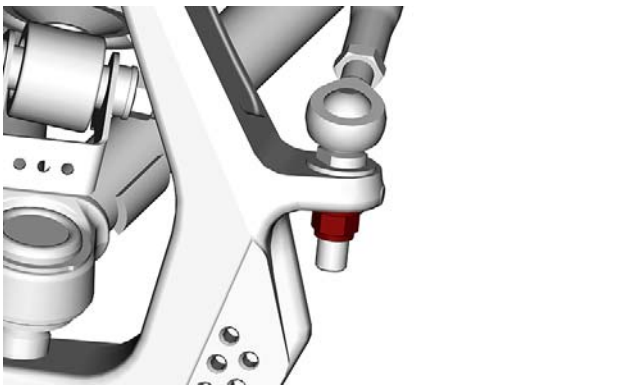

SKI LEG

3. Cut the locking tie on the steering boot.

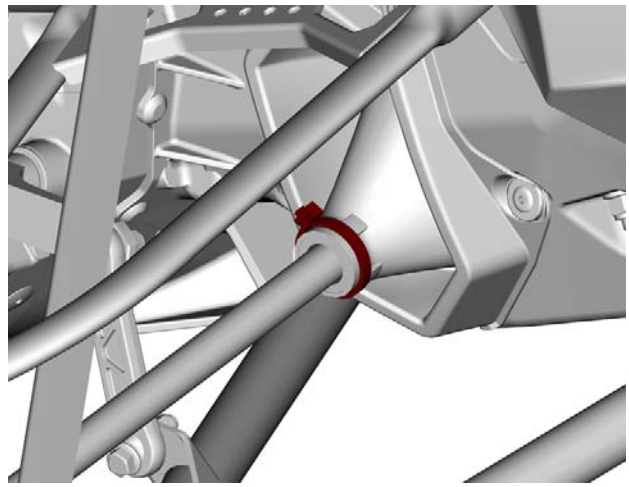

4. Remove tie-rod with ring from vehicle.

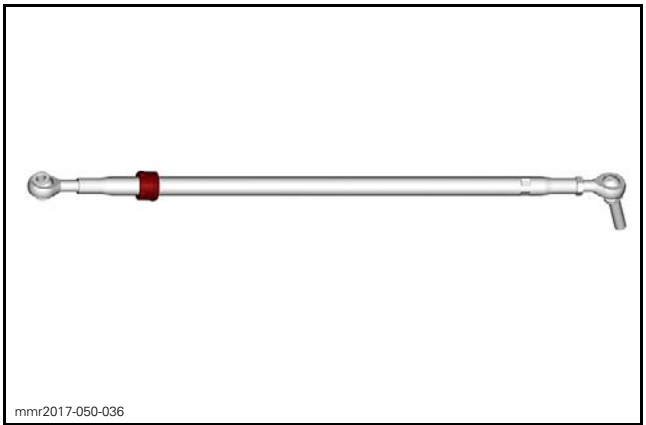

Installing the Tie-Rod

The installation is the reverse of the removal procedure. However, pay attention to the following.

Adjust the length of all tie-rod end to specification without tightening the jam nuts.

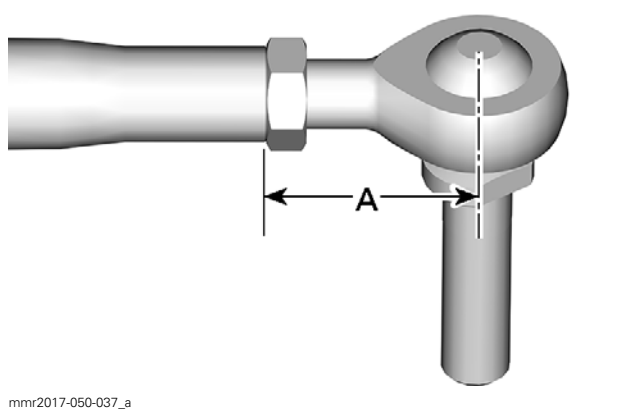

TIE-ROD LENGTH (A)
30 mm (1.181 in)

⚠ WARNING

The maximum tie-rod end length (A) not engaged in the tie rod must not exceed 34 mm (1.339 in).

Install tie-rod with the groove on ski leg side.

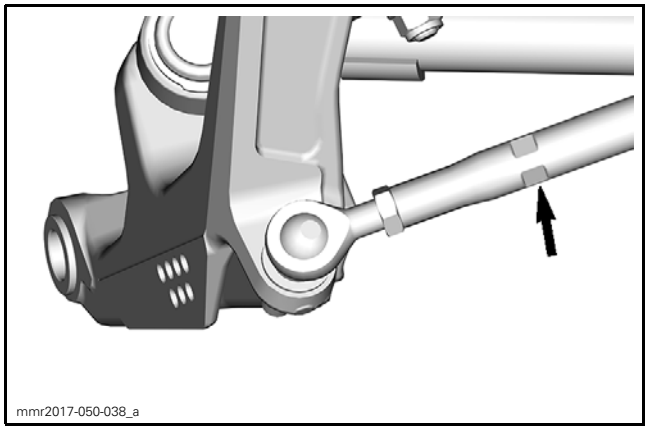
mmr2017-050-038_a

Install the washer and the nut, and tighten to specification.

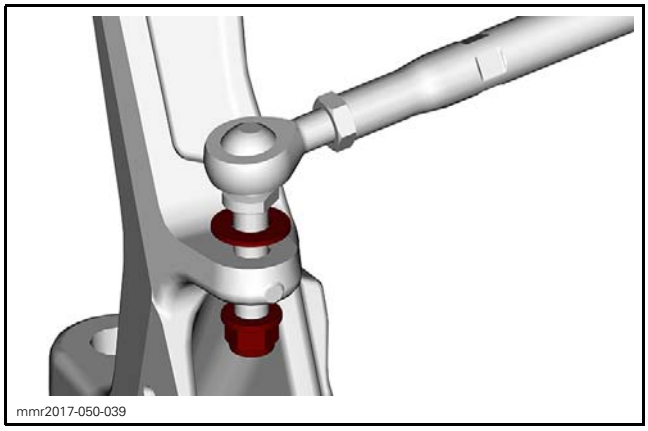
mmr2017-050-039

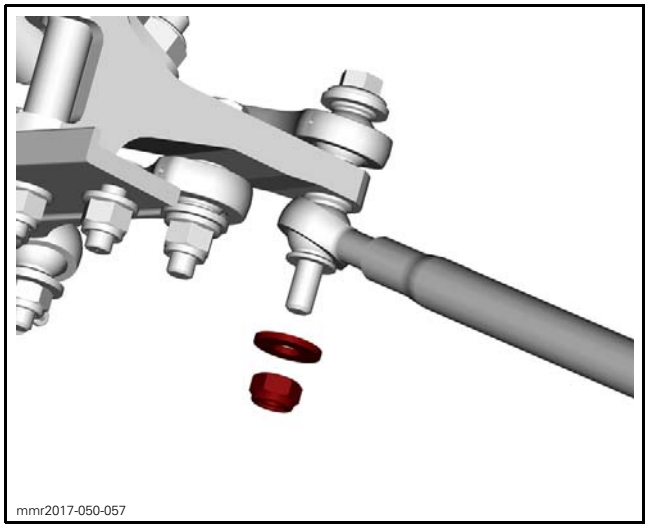
mmr2017-050-057

TIGHTENING TORQUE	
Outer tie-rod end nut	48 N•m ± 6 N•m (35 lbf•ft ± 4 lbf•ft)
Inner tie-rod end nut	24.5 N•m ± 3.5 N•m (18 lbf•ft ± 3 lbf•ft)

Ensure the new locking tie is fully seated and the head is positioned upwards.

NOTICE **To avoid bellows damage, make sure locking tie head is positioned upwards.**

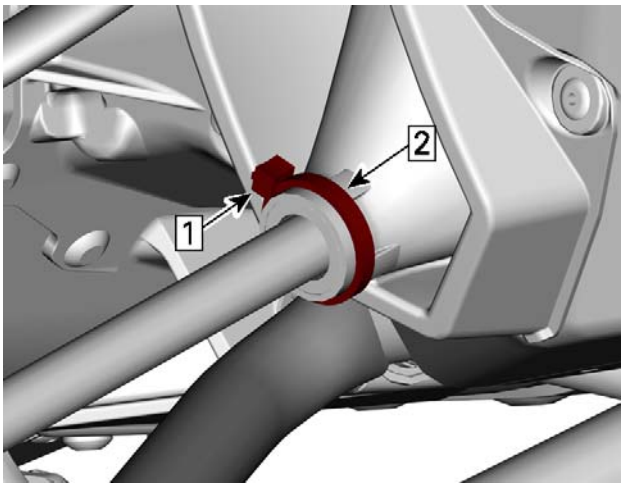

mmr2017-050-702_a

1. *Head up*
2. *Fully seated*

Perform the steering alignment, refer to *ALIGNING THE STEERING* in this section.

STEERING COLUMN

Removing the Steering Column - With Pitman Arm

1. Remove the tuned pipe. Refer to *EXHAUST SYSTEM* subsection.
2. Remove the rear console. Refer to *BODY* subsection.
3. Remove *HANDLEBAR EXTENSION* from steering column. Refer to the procedure in this subsection.
4. Remove the inner tie-rod end nuts and screws. Refer to *TIE-RODS* in this subsection.
5. Remove nuts and screws securing steering column upper support.

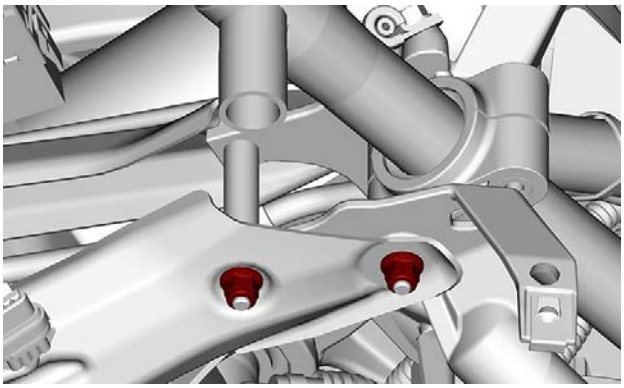
mmr2017-049-017

FRONTWARD POSITION COLUMN

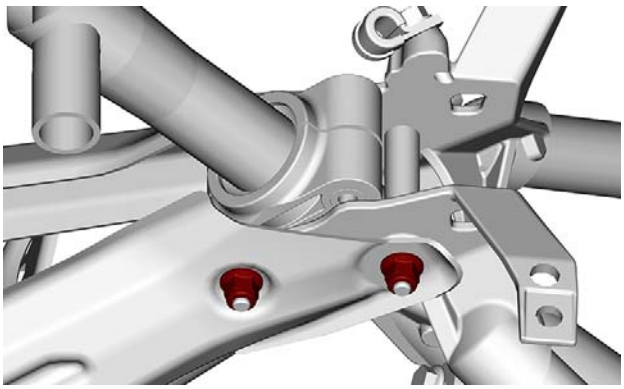
mmr2017-049-022

REARWARD POSITION COLUMN

6. Remove nuts and screws securing the steering column lower support.

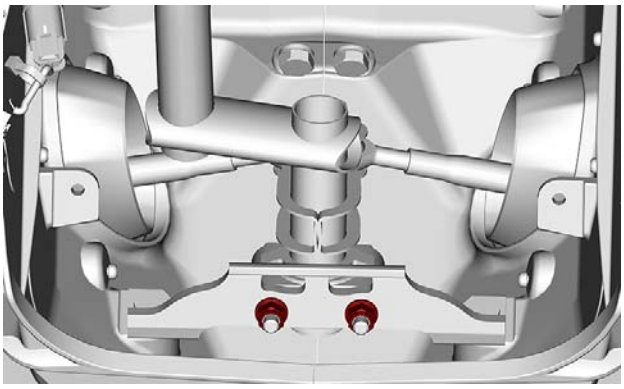
mmr2017-049-018

7. Pull steering column from top.

Removing the Steering Column - With Steering Rack

1. Remove the tuned pipe. Refer to *EXHAUST SYSTEM* subsection.
2. Remove the rear console. Refer to *BODY* subsection.
3. Remove *HANDLEBAR EXTENSION* from steering column. Refer to the procedure in this subsection.
4. Remove nuts and screws securing steering column upper support.

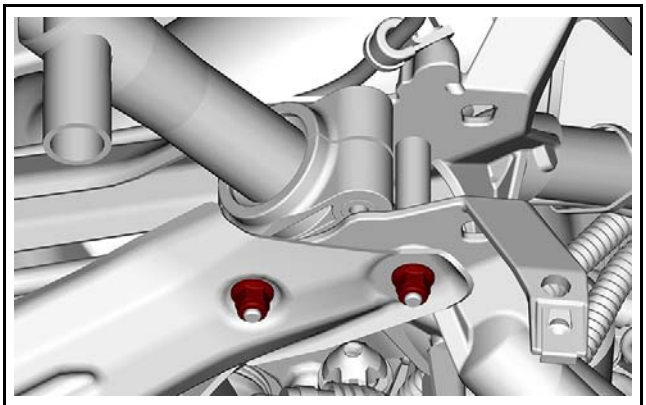
mmr2017-050-040

5. From inside engine compartment, remove the steering column pitman arm nut.

NOTE: Use an Allen key to lock the ball joint.

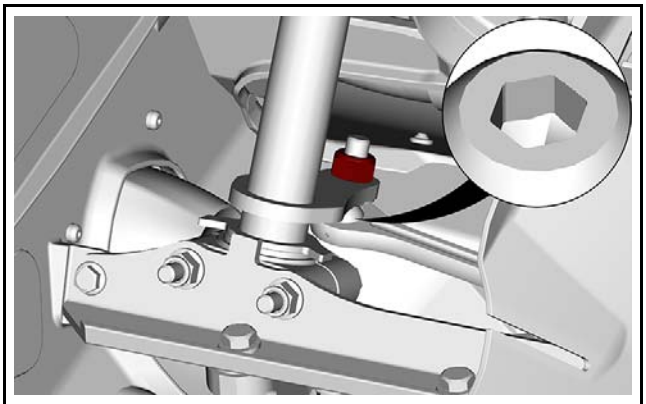
mmr2017-050-041

6. Remove nuts, stopper plate and screws securing the steering column lower support.

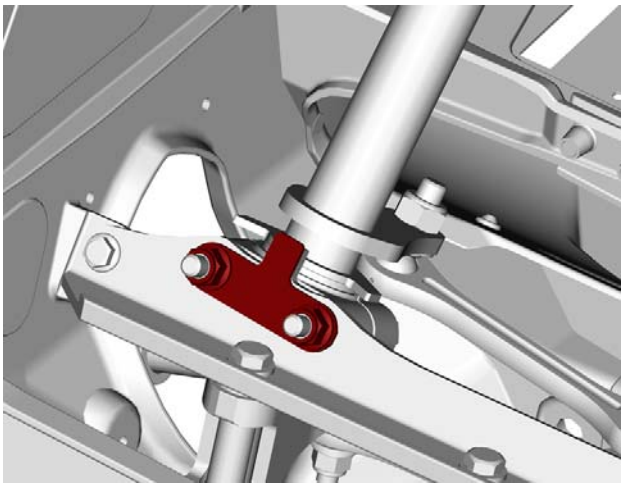
mmr2017-050-058

7. Pull steering column from top.

Inspecting the Steering Column

Check if steering column is:
- Cracked
- Bent
- Twisted
- Otherwise damaged.

Replace steering column if necessary.

⚠ WARNING

Do not try to repair a defective steering column.

Installing the Steering Column

The installation is the reverse of the removal procedure. However, pay attention to the followings.

1. Apply grease on vibration dampers before installing upper and lower supports.

SERVICE PRODUCT
SYNTHETIC SUSPENSION GREASE (P/N 779163)

2. Install new elastic nuts on the steering column retaining screws.
3. Tighten nuts to specification.

TIGHTENING TORQUE	
Upper steering column support nut	12.5 N•m ± 2.5 N•m (111 lbf•**in** ± 22 lbf•**in**)
Lower steering column support nut	23.5 N•m ± 3.5 N•m (17 lbf•ft ± 3 lbf•ft)

STEERING RACK

Inspecting the Steering Rack

Remove the tuned pipe. Refer to *EXHAUST SYSTEM* subsection.

Check if steering rack component are:
- Cracked
- Bent
- Twisted
- Otherwise damaged.

Check steering rack for looseness.

Check if stopper plate is deformed or otherwise damaged.

Replace component if necessary.

Removing the Steering Rack

1. Remove the tuned pipe. Refer to *EXHAUST SYSTEM* subsection.
2. Remove inner tie-rod end nuts and screws.
3. Remove the nuts, stopper plate and screws as per the following illustrations.

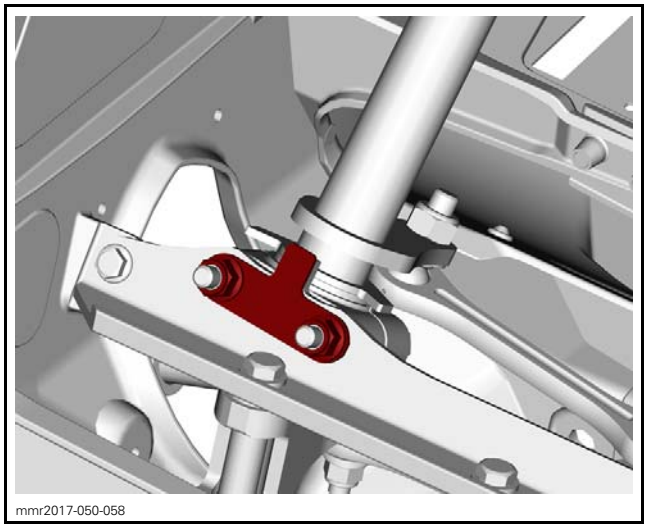
mmr2017-050-058
INSIDE ENGINE COMPARTMENT

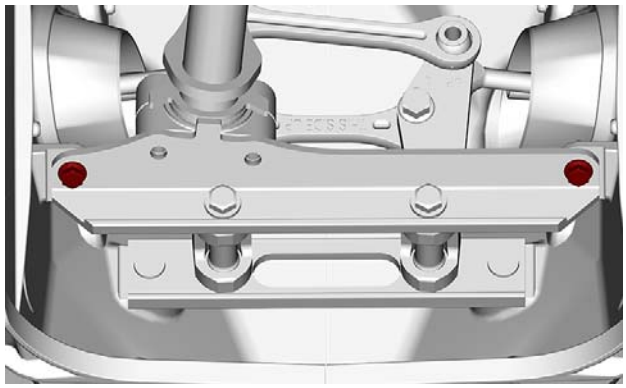

mmr2017-050-043

INSIDE ENGINE COMPARTMENT

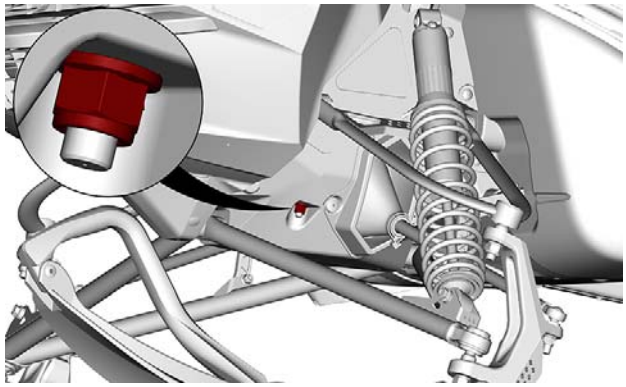

mmr2017-050-044

Installing the Steering Rack

The installation is the reverse of the removal procedure.

BODY (600R E-TEC AND 850 E-TEC)

SERVICE TOOLS

Description	Part Number	Page
SUPERTANIUM DRILL BIT 3/16"	529 031 800	321

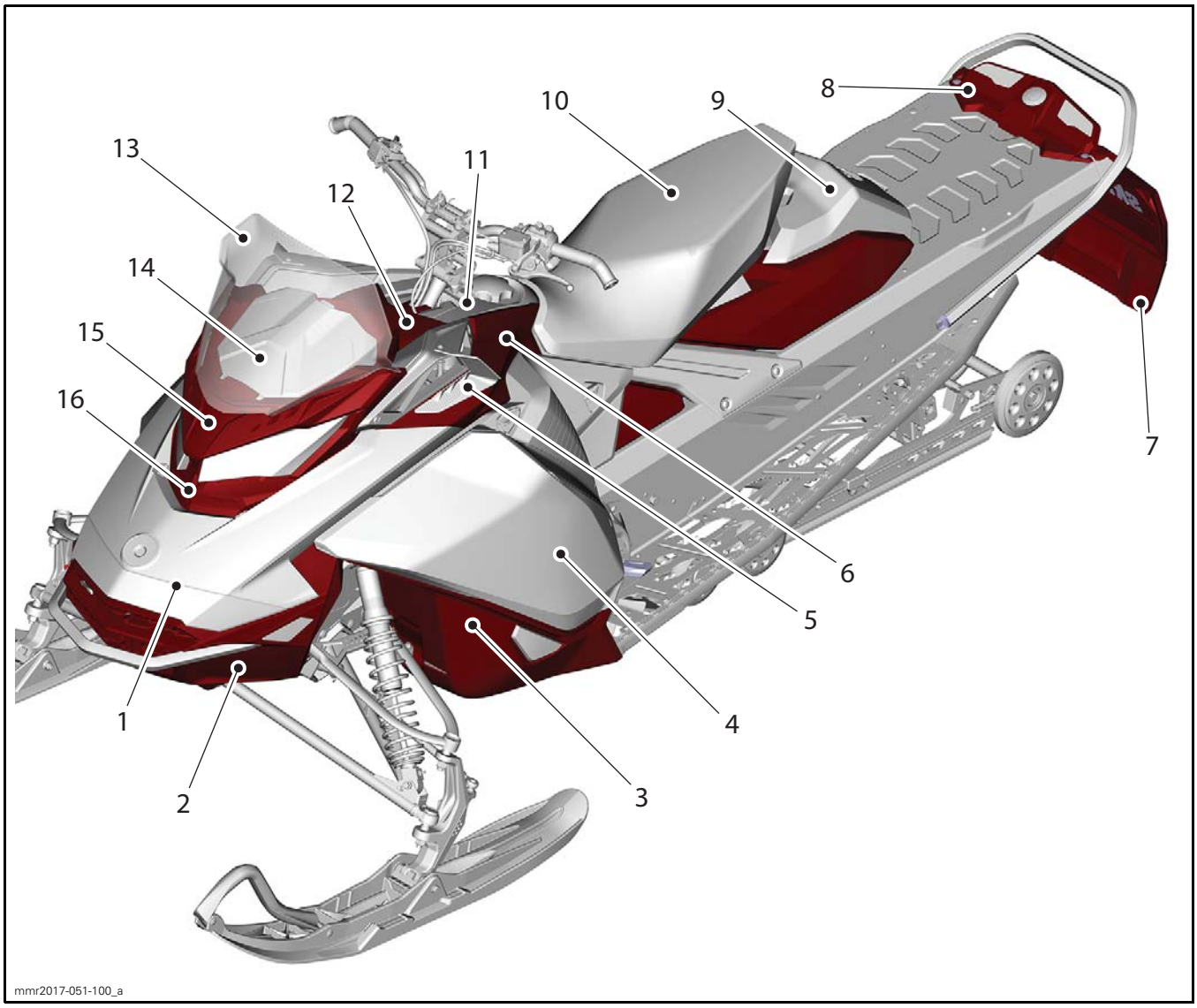

1. *Hood*
2. *Bottom pan*
3. *Side bottom pan*
4. *Side panel*
5. *Side wind deflector*
6. *Lateral hood*
7. *Snow guard*
8. *Taillight cover*
9. *Battery cover*
10. *Seat*
11. *Console*
12. *Gauge support*
13. *Windshield*
14. *Storage compartment cover*
15. *Windshield support*
16. *Headlight trim*

GENERAL

CLEANING

Cleaning the Seat

It is recommended to clean the seat with a solution of warm soapy water, using a soft clean cloth.

NOTICE **Avoid use of harsh detergents such as strong soaps, degreasing solvents, abrasive cleaners, paint thinners, etc. that may cause damage to the seat cover.**

Cleaning the Plastic

Clean the vehicle thoroughly, removing all dirt and grease accumulation.

To clean use a soft clean cloth and either soapy water or isopropyl alcohol.

To remove grease, oil or glue use isopropyl alcohol.

NOTICE **Do not apply isopropyl alcohol or acetone directly on decals.**

Follow these recommendations to protect the glossy finish of polypropylene parts.

Apply a non abrasive wax on glossy finish only.

Non Compatible Cleaning Products

NOTICE **Polypropylene is not compatible with PETROLEUM BASE PRODUCTS. Contact with petroleum base products, such as cleaners or lubricants will permanently alter the glossy finish of polypropylene parts.**

NOTICE **The following products must not be applied on the plastic components used on the vehicles:**

- Gasoline
- Brake fluid
- Kerosene
- Diesel fuel
- Lighter fluid
- Varsol
- Naphtha
- Acetone
- Strong detergents
- Abrasive cleaners
- Waxes containing an abrasive or a cleaning agent in their formula.

MATERIAL TYPE	NON-COMPATIBLE CLEANING PRODUCTS
Polypropylene	ANY PETROLEUM BASE CLEANING PRODUCTS
	XP-S ATV Finishing Spray (P/N 219 701 704)
	XP-S ATV Cleaning Kit (P/N 219 701 713) (it contains the above XP-S ATV Finishing Spray)

vbs2012-006-002_a

DO NOT USE ON POLYPROPYLENE

Compatible Cleaning Products

MATERIAL TYPE	COMPATIBLE CLEANING PRODUCT
Polypropylene	XPS ATV Wash (P/N 219 701 702)
	Soapy water

vbs2012-006-001

SAFE FOR POLYPROPYLENE

REPAIRING BODY PARTS

The very first step before repairing plastic materials is to find out exactly which type of material is involved.

On the inner surface of each part, the production date, part number, and material code are molded in.

PLASTIC PARTS	
CODE	MATERIAL
PP	Polypropylene
EMA+PA	Surlyn

NOTICE **Some repair products are not compatible with certain plastics.**

⚠ WARNING

Polycarbonate windshields must never be repaired by welding or otherwise.

The following company provides a complete line of products to repair plastic materials:

CREST INDUSTRIES, INC.
Trenton, MI 48183
Phone: 734 479-4141
Toll Free: 1 800 822-4100
Fax: 734 479-4040
E-Mail: info@crestauto.com
www.crestauto.com

PROCEDURES

NOTE: The same procedure applies for RH and LH side. Most of the time, only one side is described in this subsection.

DECAL

Replacing the Decal

1. To remove a decal; heat old decal with a heat gun (low temperature) and peel off slowly.
2. Using isopropyl alcohol, clean the surface and dry thoroughly.

NOTICE **Do not apply isopropyl alcohol or solvent directly on decals. Use only in a well ventilated area.**

3. Just before beginning to affix the new decals, wipe the surface with a clean damp cloth and allow to dry.
4. Use a pallet to affix the decal. Always work from the center towards the edges.

NOTICE **Do not remove the pre-mask yet.**

5. Once the decal is correctly affixed, carefully make a final pass with the pallet. Apply enough pressure to make sure the glue sticks well on the surface.
6. Remove the pre-mask.

SIDE PANEL

Removing the Side Panel

1. Release all lock devices.

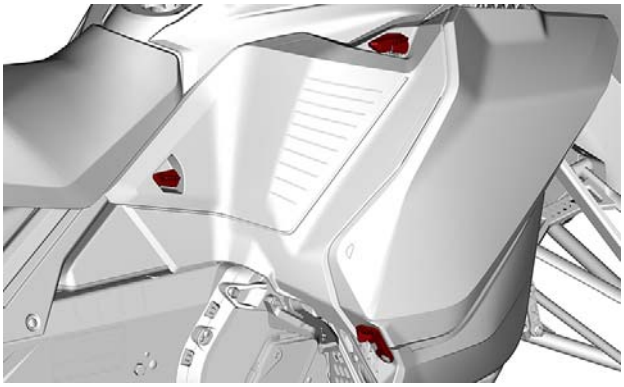
mmr2017-051-002

2. Open side panel.
3. Lift the side panel up and towards front.

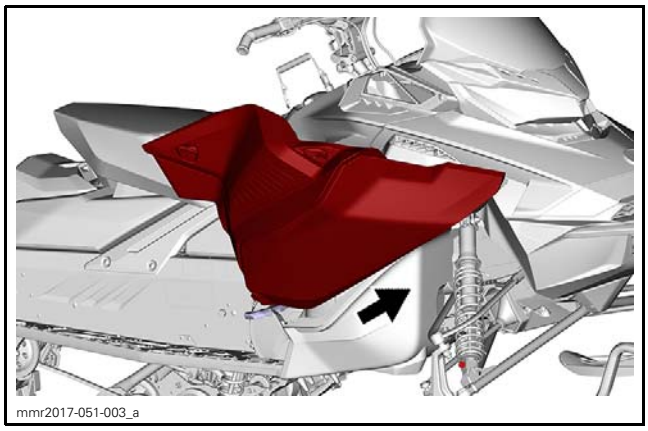
mmr2017-051-003_a

NOTICE **Make sure to place panels in a safe place to avoid scratching.**

Installing the Side Panel

The installation is the reverse of the removal procedure.

REWIND STARTER HANDLE HOUSING

Removing the Rewind Starter Handle Housing

1. Open RH side panel.
2. Remove screw retaining housing to bracket.

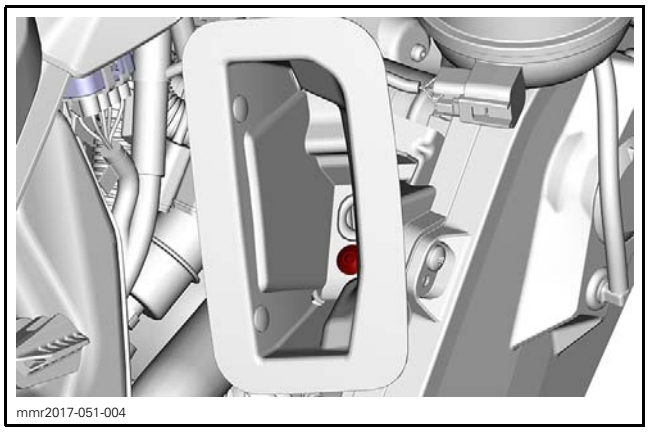
mmr2017-051-004

3. Remove rewind starter handle. Refer to *REWIND STARTER* subsection.

Installing the Rewind Starter Handle Housing

Installation is the reverse of removal procedure. Pay attention to the following.

TIGHTENING TORQUE	
Rewind starter handle housing screw	2.3 N•m ± 0.2 N•m (20 lbf•**in** ± 2 lbf•**in**)

WINDSHIELD

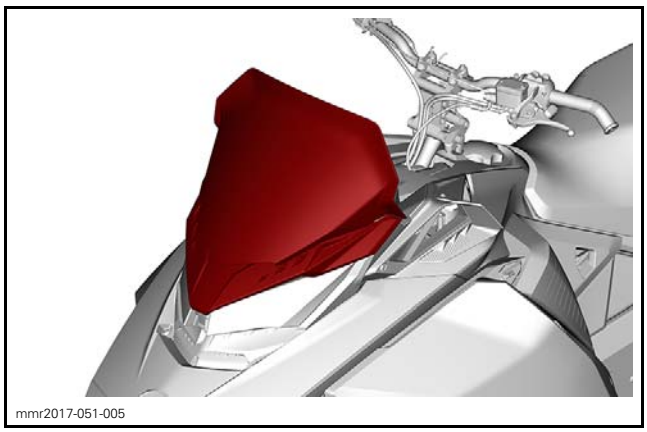
mmr2017-051-005

Removing the Windshield

Place your hands on each side of windshield.

Pull the windshield until its pins come out of rubber grommets then pull in the center to remove center pin from grommet.

Installing the Windshield

The installation is the reverse of removal procedure.

Lubricate the grommets using soapsuds.

NOTICE **Do not lubricate grommets with any type of grease.**

Secure windshield by inserting the windshield pins into the grommets.

NOTE: Make sure not to push grommets through gauge support holes.

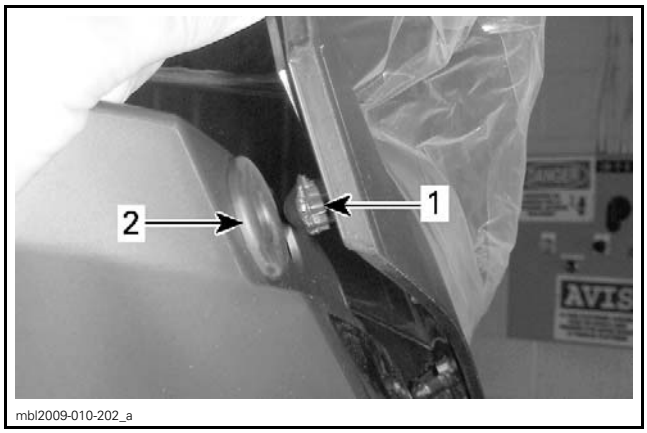

mbl2009-010-202_a

TYPICAL
1. Windshield tab
2. Gauge support front grommet

⚠ WARNING

Make sure that handlebar turns freely in both directions. Make sure that there is no contact at any time between handlebar wind deflectors (if so equipped) and windshield.

STORAGE COMPARTMENT COVER

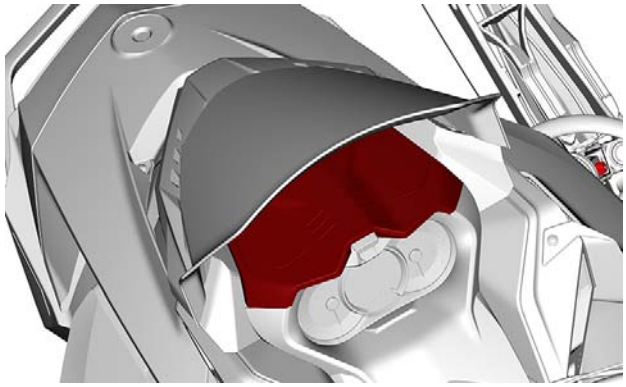

mmr2017-051-006

Removing the Storage Compartment Cover

1. Remove windshield.
2. Open storage cover until it is almost vertical.

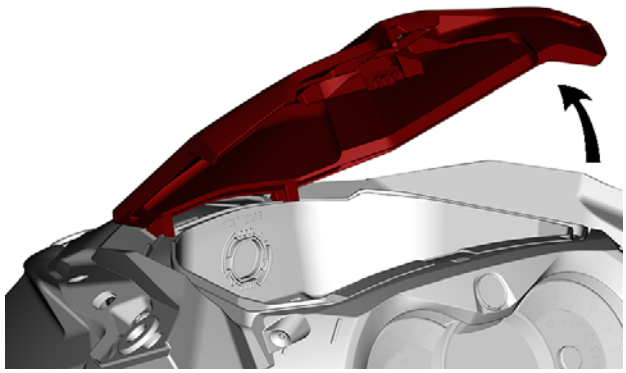

mmr2017-051-007_a

3. Pull out storage cover.

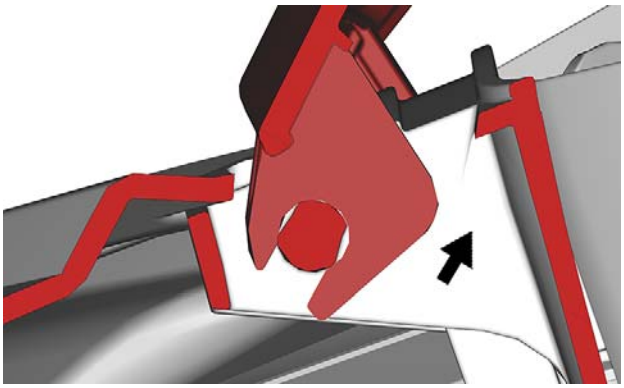

mmr2017-051-008_a

Installing the Storage Compartment Cover

The installation is the reverse of the removal procedure.

NOTICE Ensure windshield is NOT installed. Otherwise, the storage cover could be damaged during installation.

GAUGE SUPPORT

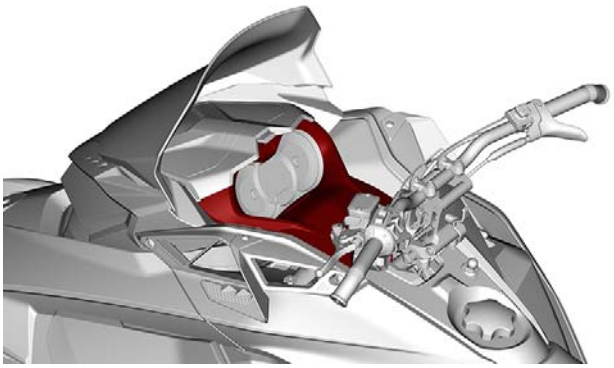

mmr2017-051-009

Removing the Gauge Support

1. Remove the windshield. Refer to procedure in this subsection.
2. Open the storage compartment cover
3. Remove the gauge support screws.

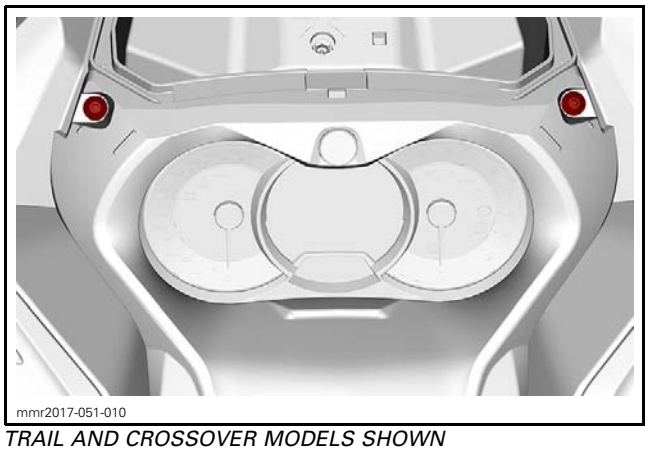
mmr2017-051-010

TRAIL AND CROSSOVER MODELS SHOWN

4. Lift the front of the gauge support, then slide it forward to remove it.

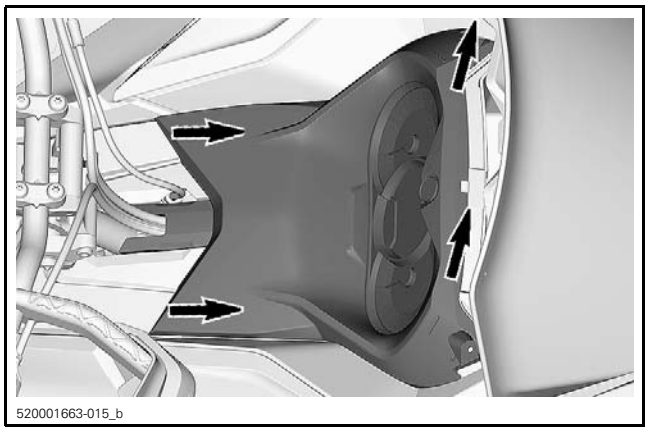
520001663-015_b

5. Remove the multifunction gauge from support. Refer to *GAUGE* subsection.

Installing the Gauge Support

The installation is the reverse of removal procedure.

TIGHTENING TORQUE	
Gauge support screw	2.3 N•m ± 0.2 N•m (20 lbf•**in** ± 2 lbf•**in**)

UPPER BODY MODULE

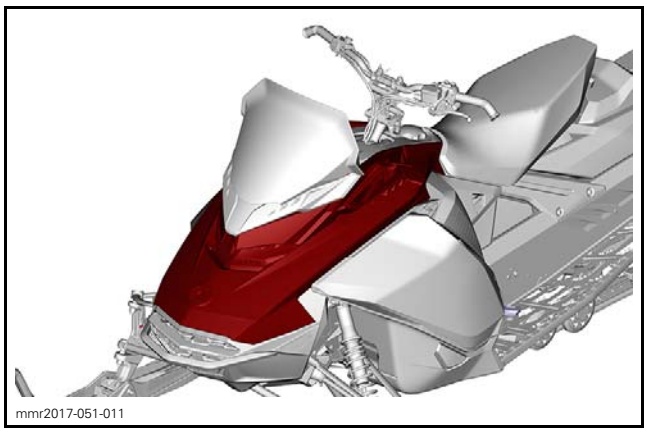
mmr2017-051-011

Removing the Upper Body Module

1. Refer to procedures in this subsection and remove:
   - Side panels
   - Gauge support
   - Storage compartment and its cover.
2. Disconnect the MAPTS and headlight connectors.

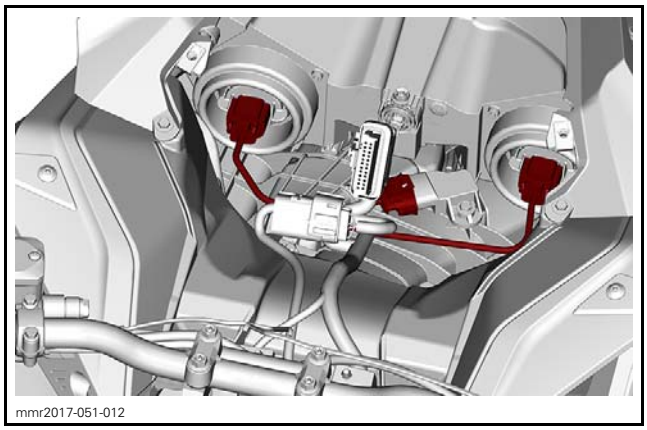
mmr2017-051-012

3. Loosen the air intake hose clamp.

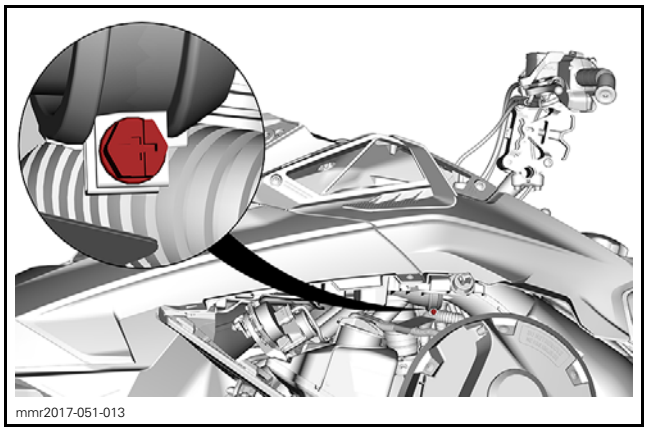
mmr2017-051-013

4. Remove the upper body module retaining screws.

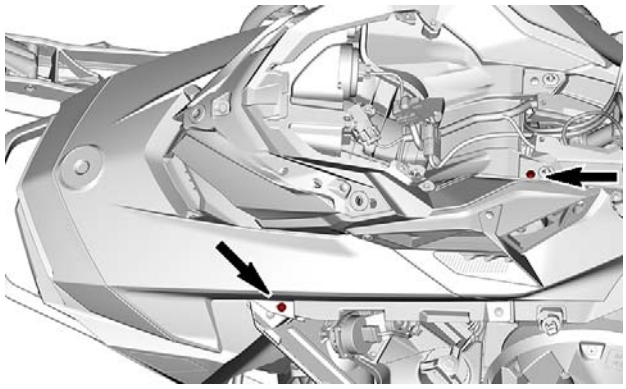
mmr2017-051-014_a

5. Pull on the rear end of both lateral hood until their tabs come out of the rear console.

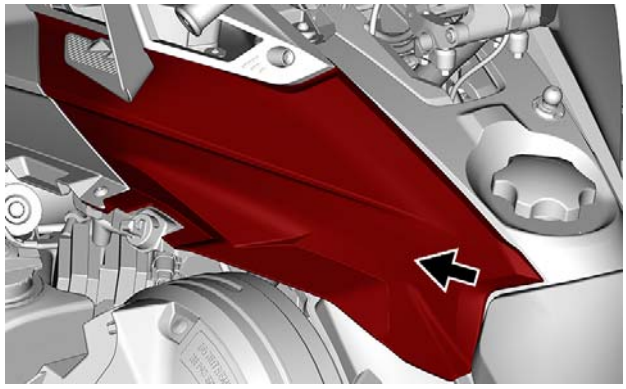
mmr2017-051-015_a

6. Remove the upper body module.
   6.1 Grab the upper body module in the gauge support section.
   6.2 Pull the module forward.
   6.3 Remove the module from the vehicle.

Installing the Upper Body Module

The installation is the reverse of the removal procedure. However, pay attention to the following.

Ensure to engage rear hood tabs in rear console.


mmr2017-051-016

Ensure to connect the air intake hose.

TIGHTENING TORQUE	
Upper body module screw	2.3 N•m ± 0.2 N•m (20 lbf•**in** ± 2 lbf•**in**)

HOOD

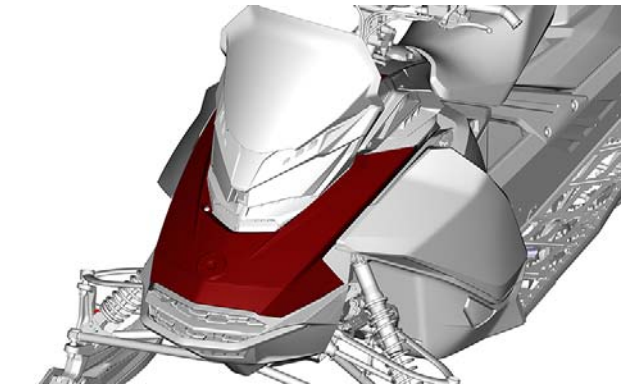
mmr2017-051-018

Removing the Hood

1. Remove the upper body module. Refer to procedure in this subsection.
2. Remove both sides air deflector and air intake filter.

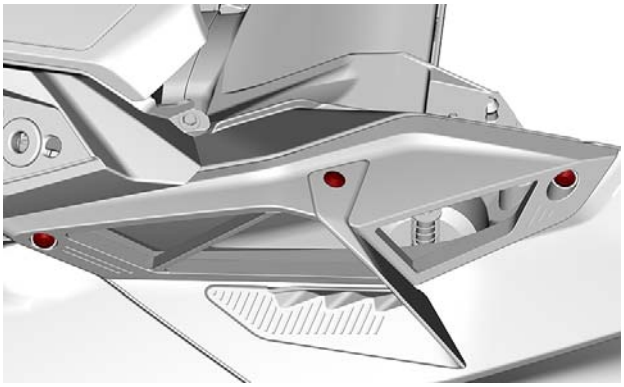
mmr2017-051-019

3. Remove the front push nut under the hood.

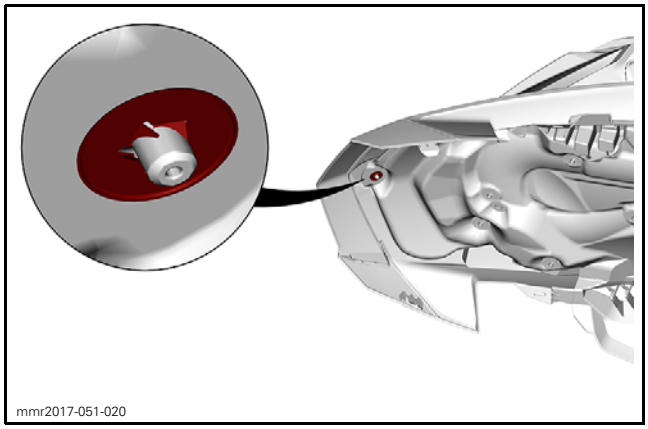
mmr2017-051-020

4. Remove hood screws.

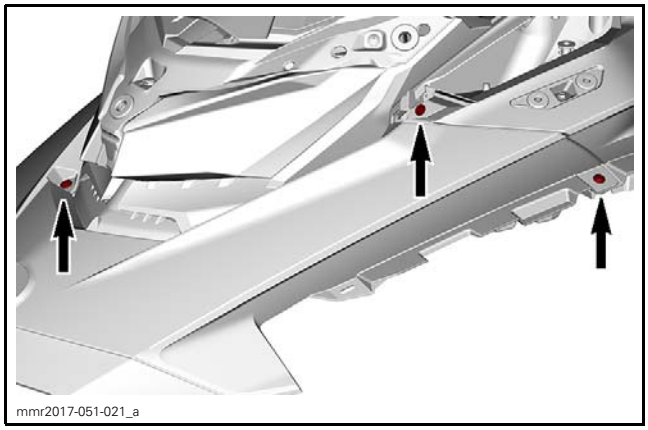
mmr2017-051-021_a

5. Pull out hood.

Installing the Hood

The installation is the reverse of removal procedure.

Install a new push nut.

TIGHTENING TORQUE	
Hood hexagonal screw	1.8 N•m ± 0.2 N•m (16 lbf•**in** ± 2 lbf•**in**)
Hood Torx screw	2.3 N•m ± 0.2 N•m (20 lbf•**in** ± 2 lbf•**in**)

HEADLIGHT MODULE

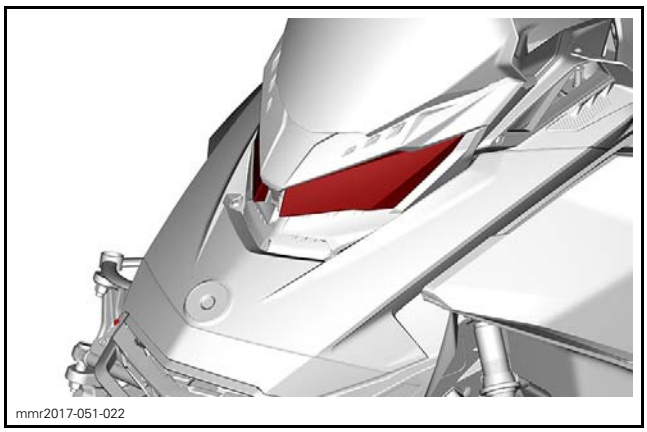
mmr2017-051-022

Removing the Headlight Module

1. Remove the hood. Refer to procedure in this subsection.
2. Remove the headlight trim fasteners.

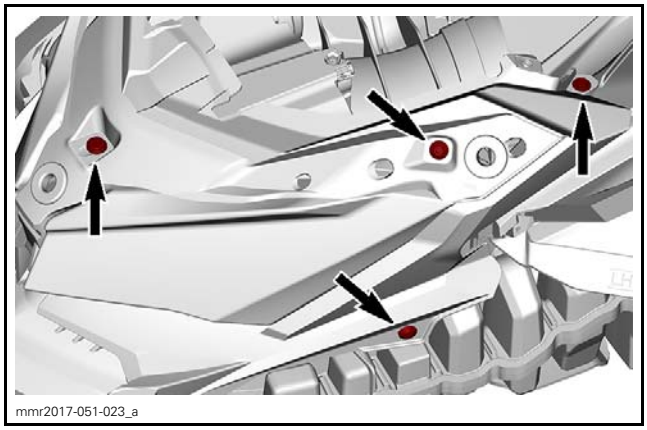
mmr2017-051-023_a

3. Pull out headlight housing and trim.

Installing the Headlight Module

The installation is the reverse of removal procedure.

TIGHTENING TORQUE	
Headlight hexagonal screw	1.8 N•m ± 0.2 N•m (16 lbf•**in** ± 2 lbf•**in**)
Headlight Torx screw	2.3 N•m ± 0.2 N•m (20 lbf•**in** ± 2 lbf•**in**)

CONSOLE

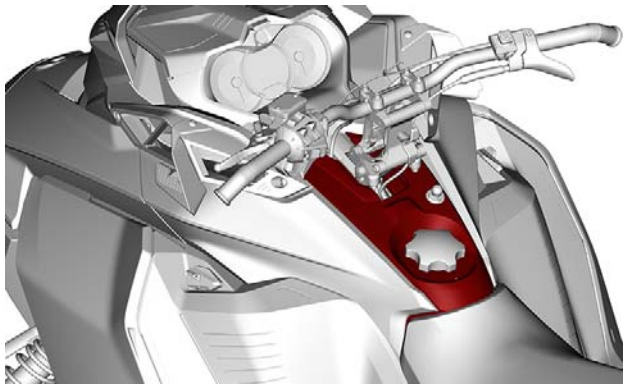
mmr2017-051-024

Removing the Console

1. Remove *UPPER BODY MODULE*. Refer to procedure in this subsection.
2. Remove the seat. Refer to *SEAT* subsection.
3. Cut harness locking ties.
4. Remove console nuts.

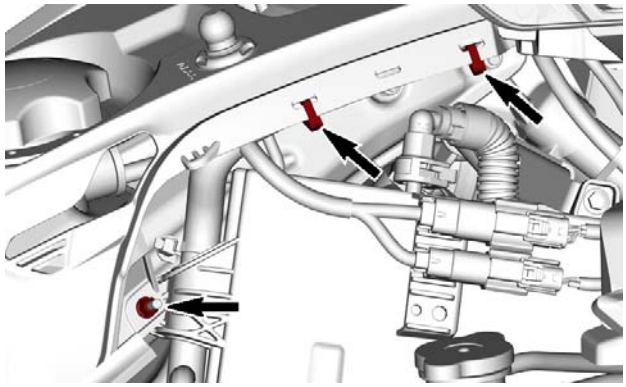
mmr2017-051-041_a

5. Remove fuel tank cap.
6. Lift up the console and unplug all connectors.
7. Install fuel tank cap.

Installing the Console

The installation is the reverse of the removal procedure.

TIGHTENING TORQUE	
Console nut	2.3 N•m ± 0.2 N•m (20 lbf•**in** ± 2 lbf•**in**)

FRONT BUMPER

Removing the Front Bumper

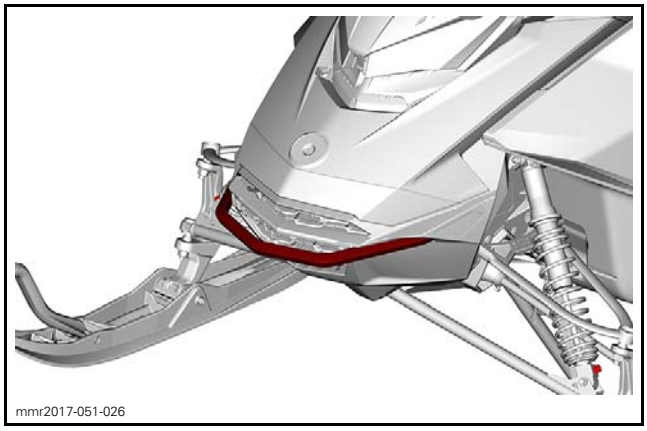
mmr2017-051-026

1. Remove tuned pipe. Refer to *EXHAUST SYSTEM* subsection.
2. Detach TCM from bumper.

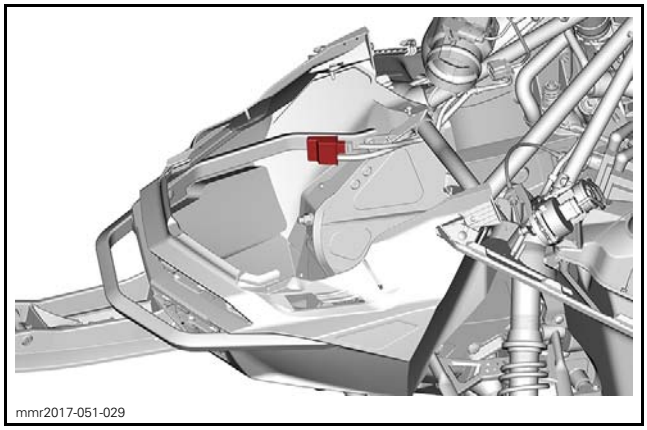
mmr2017-051-029

3. Drill out rivets from front bumper.

REQUIRED TOOL
SUPERTANIUM DRILL BIT 3/16" (P/N 529 031 800)

4. Remove front bumper screws.

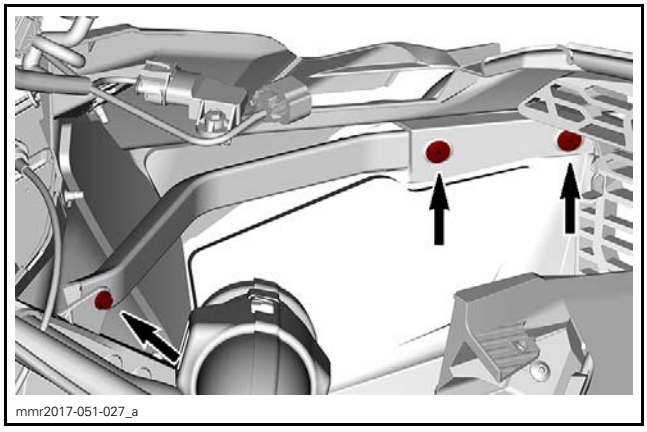
mmr2017-051-027_a

5. Pull out bumper towards front.

Installing the Front Bumper

The installation is the reverse of the removal procedure.

Ensure the small surface of the bumper extrusion is facing downwards.

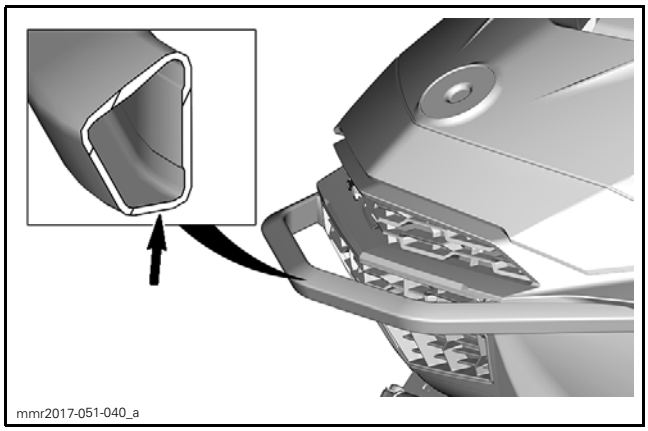
mmr2017-051-040_a

TIGHTENING TORQUE	
Front bumper nut	5 N•m ± 0.5 N•m (44 lbf•**in** ± 4 lbf•**in**)

FRONT BOTTOM PAN

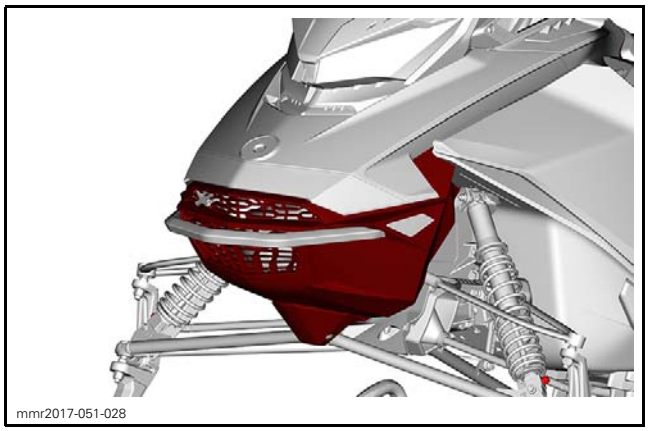
mmr2017-051-028
TYPICAL

Removing the Front Bottom Pan

1. Lift front of vehicle until skis are off the ground.
2. Place the front portion of frame on a wooden box to support it securely.

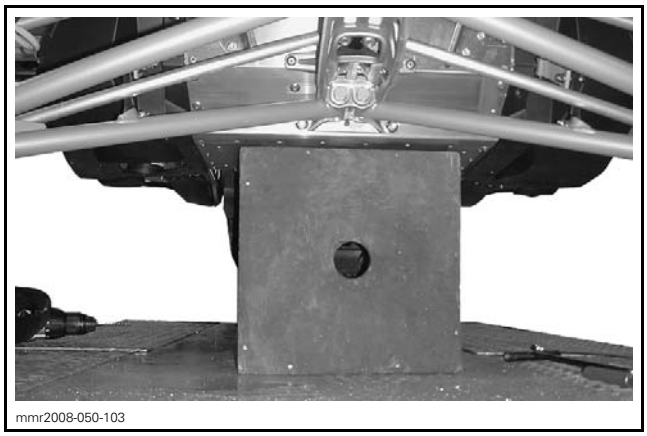
mmr2008-050-103

3. Remove the upper body module. Refer to procedure in this subsection.
4. Remove tuned pipe. Refer to *EXHAUST SYSTEM* subsection.
5. Detach TCM from bumper.

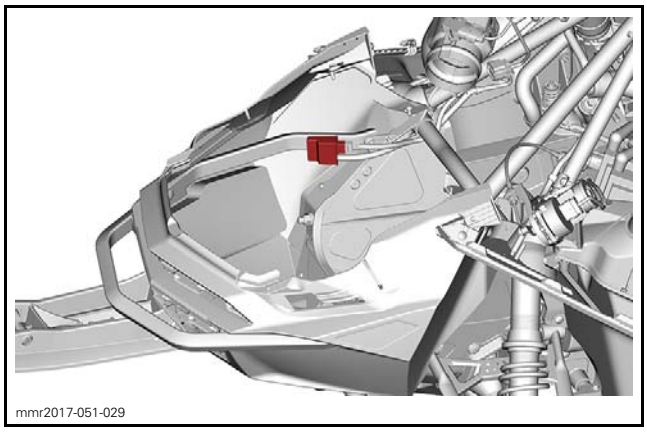
mmr2017-051-029

6. Remove *FRONT BUMPER*. See procedure in this subsection.

If the front bottom pan does not need to be replaced, the bumper may remain attached to bottom pan.

7. Remove bottom pan screws.

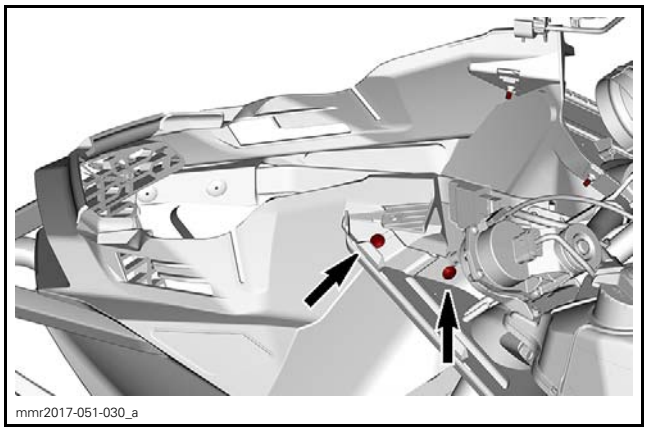
mmr2017-051-030_a

8. Remove front shock absorbers. Refer to *FRONT SUSPENSION* subsection.
9. Drill out all rivets retaining bottom pan.

NOTE: Refer to *FRAME* for proper procedure when drilling rivets retaining plastic parts.

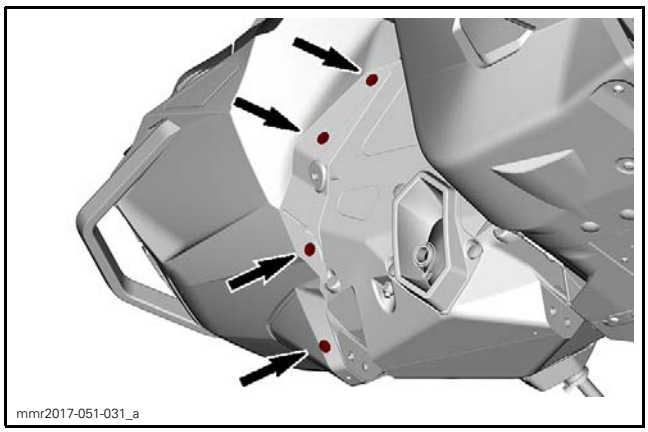
mmr2017-051-031_a

LH SIDE SHOWN — SOME PARTS REMOVED FOR CLARITY

10. Remove bottom pan.

Installing the Front Bottom Pan

The installation is the reverse of the removal procedure.

TIGHTENING TORQUE	
Bottom pan screw	1.8 N•m ± 0.2 N•m (16 lbf•**in** ± 2 lbf•**in**)

SIDE BOTTOM PAN

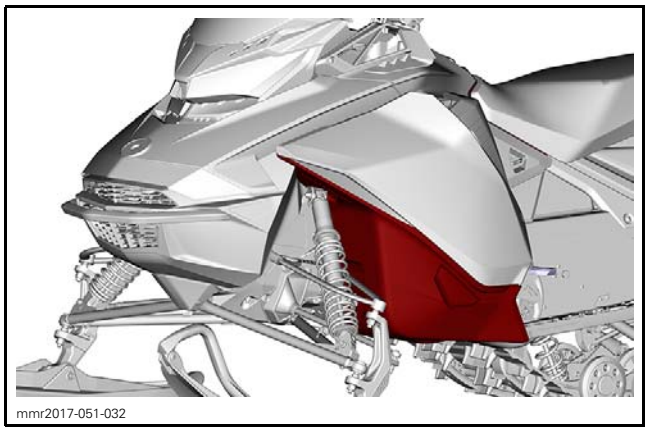
mmr2017-051-032

Removing the Side Bottom Pan

1. Remove the side panel. Refer to procedure in this subsection.
2. Lift front of vehicle until skis are off the ground.
3. Place the front portion of frame on a wooden box to support it securely.

NOTE: Ensure to clear side bottom pans so they can move freely.

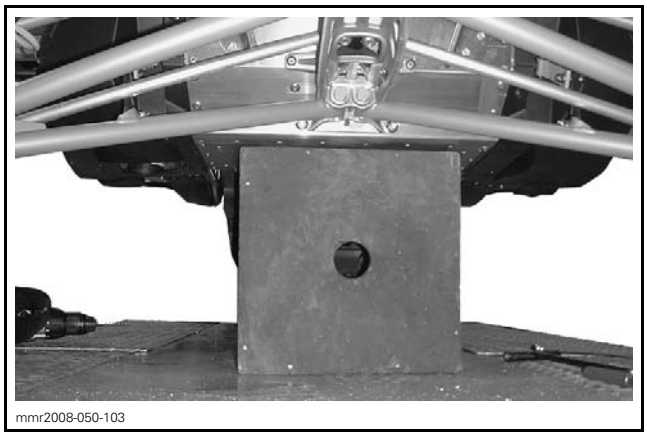
mmr2008-050-103

4. Disconnect vent tube from side bottom pan, and remove the screws.

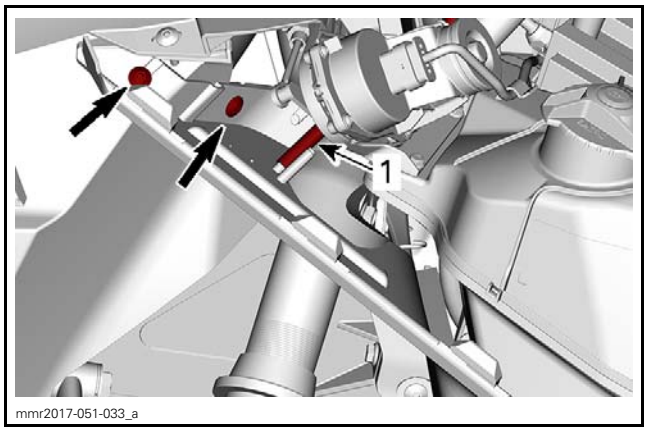

mmr2017-051-033_a

1. Vent tube

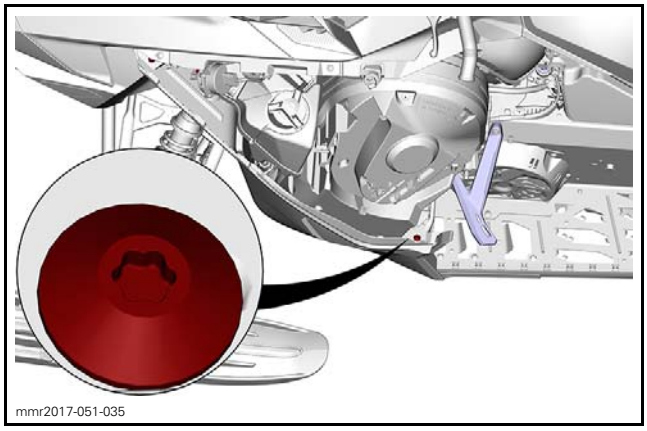
mmr2017-051-035

5. To remove the LH side bottom pan, remove the screws and washers.

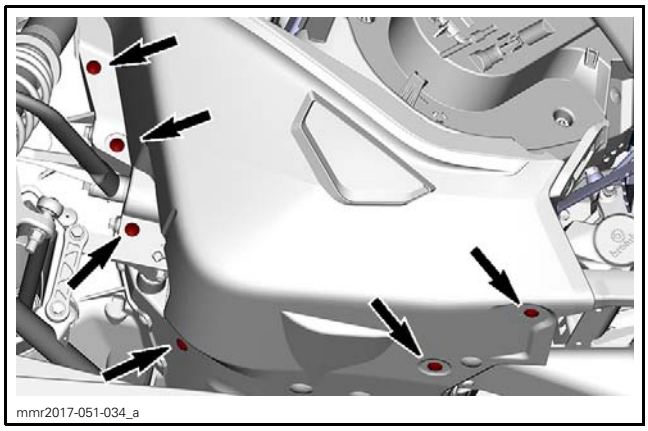
mmr2017-051-034_a

6. To remove the RH side bottom pan, drill out all rivets

NOTE: Refer to *FRAME* for proper procedure when drilling rivets retaining plastic parts.

NOTICE **Be careful not to drill through muffler.**

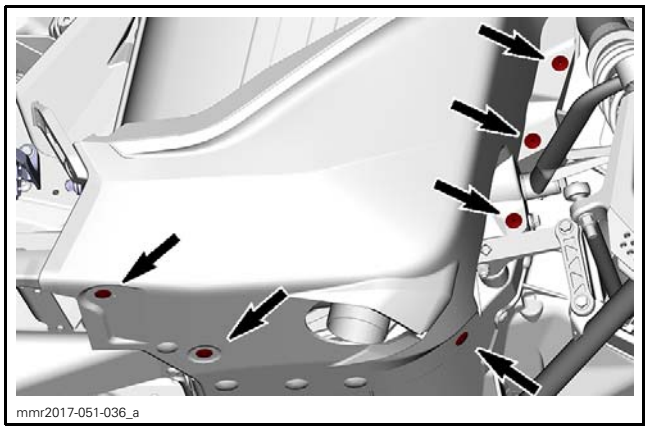
mmr2017-051-036_a

RH SIDE SHOWN

Installing the Side Bottom Pan

The installation is the reverse of the removal procedure.

Reinstall the washers at the correct position.

TIGHTENING TORQUE	
Side bottom pan screw	2.8 N•m ± 0.2 N•m (25 lbf•**in** ± 2 lbf•**in**)

SEAT

Seat Removal (Summit and Freeride models)

Roll up the front of the foam.

While pushing seat forward, pull up the latch.

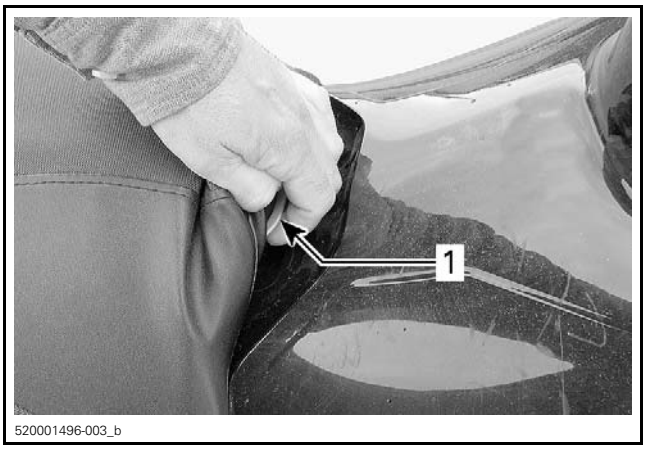

520001496-003_b

1. Seat latch

Slide seat rearwards to remove it.

Seat Installation

NOTICE **Riding the vehicle with any objects between the seat and the fuel tank could damage the fuel tank. NEVER place any objects between seat and fuel tank.**

Place seat over the hooks, then slide it forward.

Securely engage latch.

⚠ WARNING

Make sure seat is securely latched before riding.

Removing and Installing the Seat (All models exc. Summit and Freeride)

1. While pushing in the center of the seat towards front, pull on both sides, to unlock, and slide rearwards.

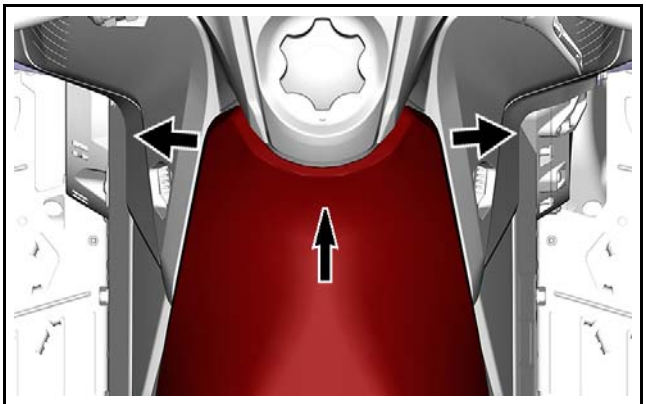
mmr2017-051-037_a

The Installation is the reverse of the removal procedure.

Ensure the seat is locked.

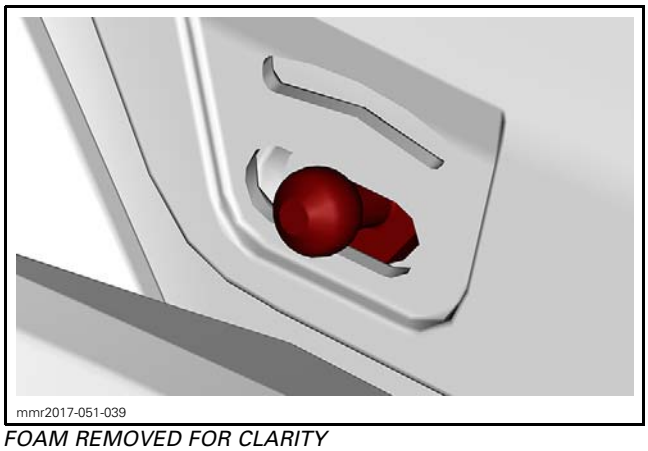

FOAM REMOVED FOR CLARITY

Replacing the Seat Cover

NOTE: We strongly reccommand the use of an electric stapler to recover the seat.

Remove seat.

Remove the old seat cover. Check the foam and replace it if necessary.

Install the new seat cover with staples.

NOTICE **Ensure to use the proper length staples. Extra long staples would pierce the exposed side of the leatherette.**

NOTE: For an easier installation, it is highly recommended to use an electric tacker.

Ensure that the seat rest firmly against a hard surface such as a piece of wood. This is done to get the staples completely pushed in place.

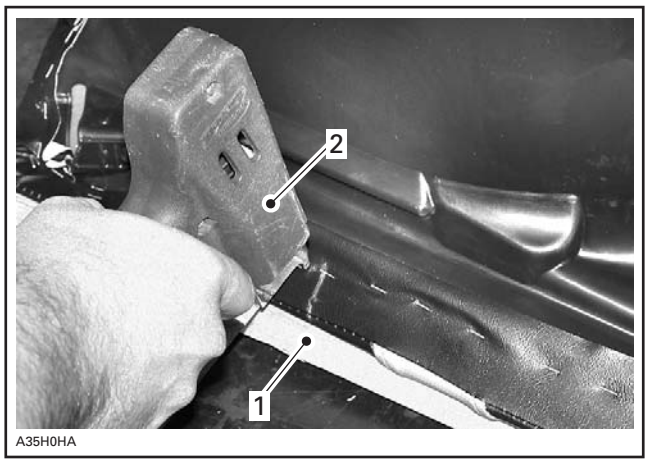

TYPICAL
1. *Piece of wood*
2. *Tacker*

All models except Summit and Freeride

The trail seat needs a special stapling procedure to ensure a strong and durable seat cover installation. Make sure the staples on the rear part of the seat are installed as shown.

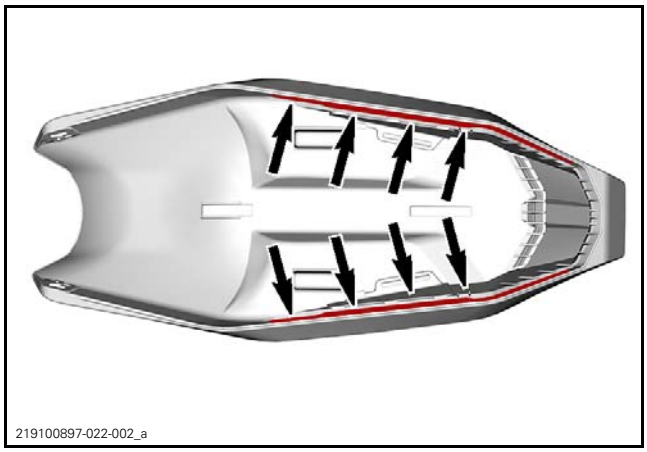

The staples go inside the crease on each side of the seat.

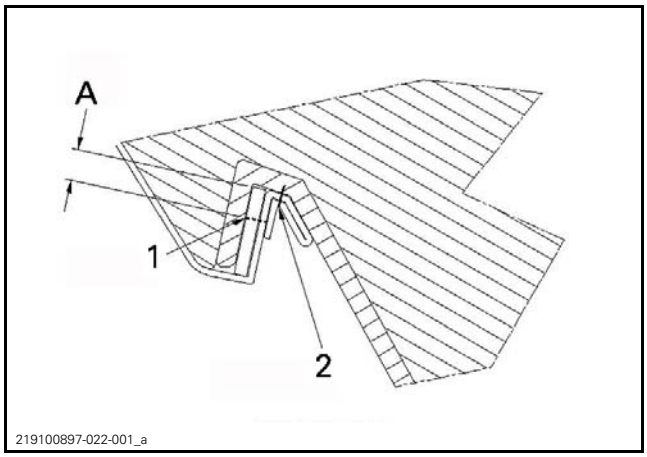

A = 5 MM (1/4 IN)
1. *Sewing*
2. *Staple*

After seat cover installation, cut out excess material leaving 5 mm (1/4 in) between staple and edge.

REAR BUMPER

TIGHTENING TORQUE	
Rear bumper screws	16 N•m ± 2 N•m (142 lbf•**in** ± 18 lbf•**in**)

TAIL LIGHT HOUSING

Drill out the rivets.

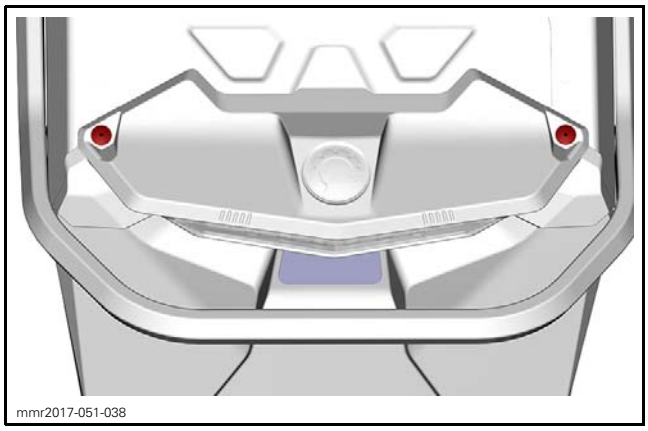

Pull housing towards rear.

BODY (850 E-TEC TURBO)

SERVICE TOOLS

Description	Part Number	Page
SUPERTANIUM DRILL BIT 3/16"	529 031 800	337

SERVICE PRODUCTS

Description	Part Number	Page
XPS ATV CLEANING KIT	219 701 713	330
XPS ATV FINISHING SPRAY	219 701 704	330
XPS ATV WASH	219 701 702	330

Models Equipped With a 850 E-TEC Turbo

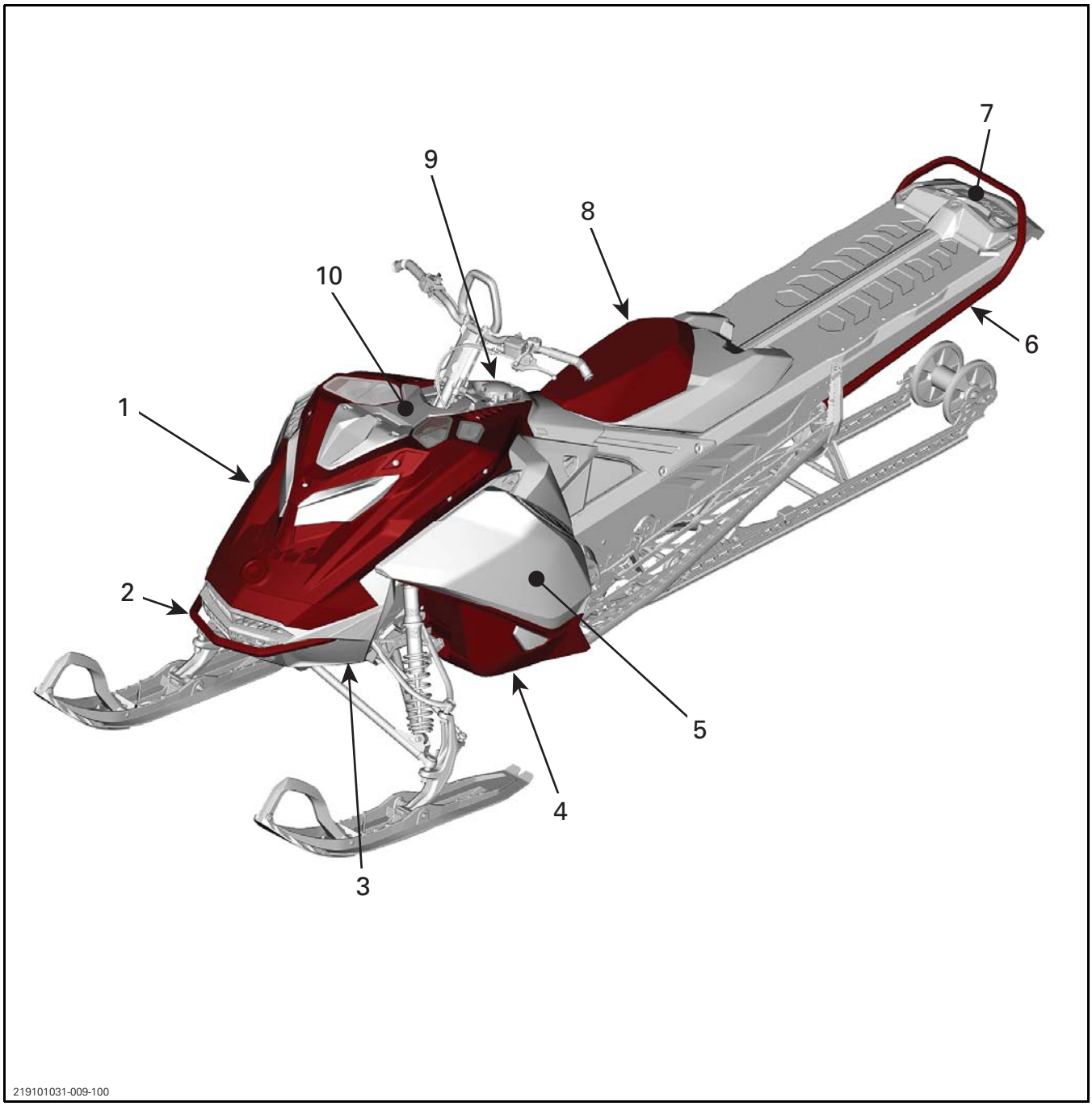

1. *Upper body module*
2. *Front bumper*
3. *Bottom pan*
4. *Side bottom pan*
5. *Side panel*
6. *Rear bumper*
7. *Snow guard*
8. *Operator seat*
9. *Console*
10. *Gauge support*

All Other Models

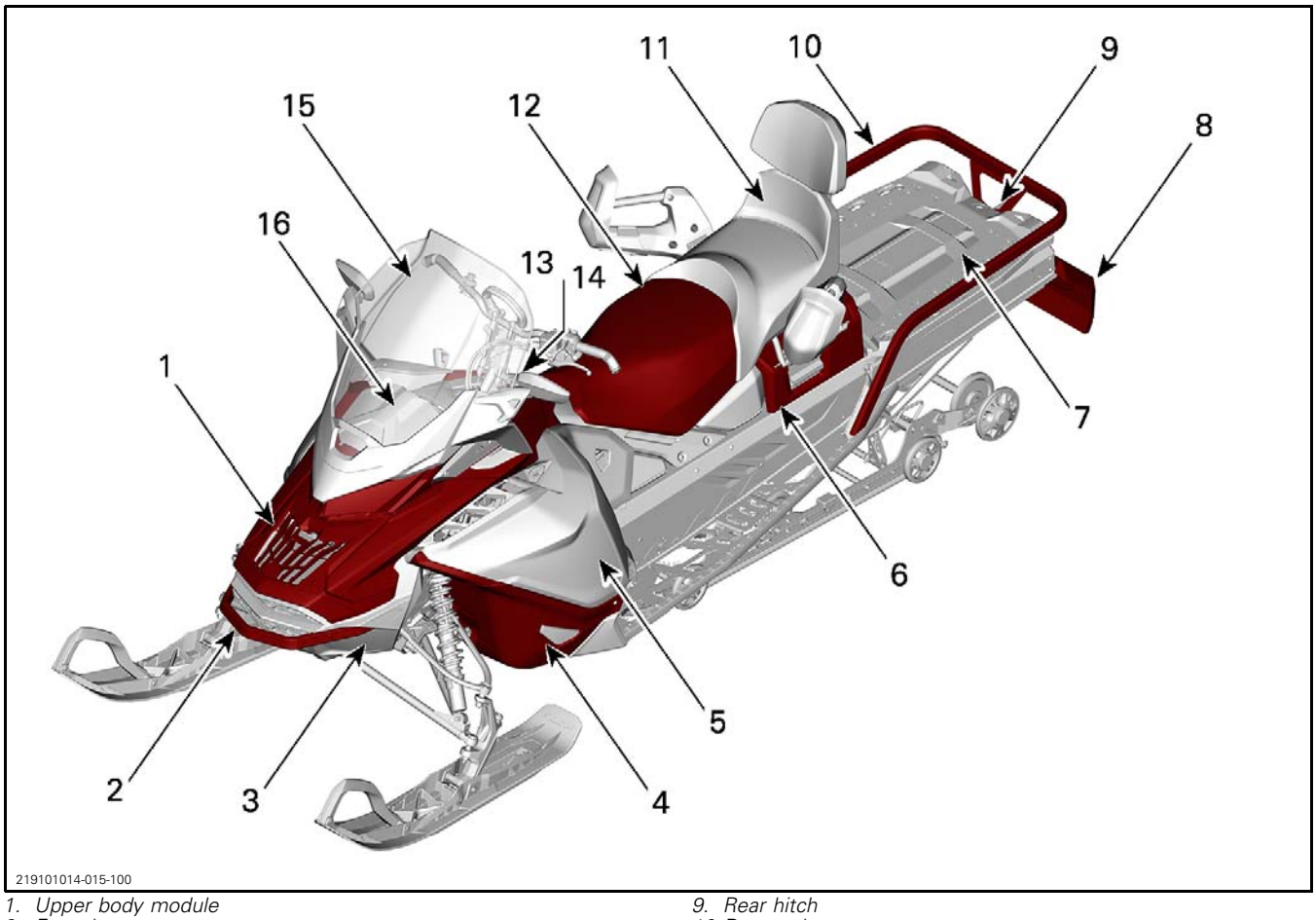

1. *Upper body module*
2. *Front bumper*
3. *Bottom pan*
4. *Side bottom pan*
5. *Side panel*
6. *Storage compartment*
7. *Multi-LinQ plate*
8. *Snow guard*
9. *Rear hitch*
10. *Rear rack*
11. *Passenger seat*
12. *Operator seat*
13. *Console*
14. *Gauge support*
15. *Windshield*
16. *Storage compartment cover*

GENERAL

CLEANING

Cleaning the Seat

It is recommended to clean the seat with a solution of warm soapy water, using a soft clean cloth.

NOTICE **Avoid use of harsh detergents such as strong soaps, degreasing solvents, abrasive cleaners, paint thinners, etc. that may cause damage to the seat cover.**

Cleaning the Plastic

Clean the vehicle thoroughly, removing all dirt and grease accumulation.

To clean use a soft clean cloth and either soapy water or isopropyl alcohol.

To remove grease, oil or glue use isopropyl alcohol.

NOTICE **Do not apply isopropyl alcohol or acetone directly on decals.**

Follow these recommendations to protect the glossy finish of polypropylene parts.

Apply a non abrasive wax on glossy finish only.

Non Compatible Cleaning Products

NOTICE **Polypropylene is not compatible with PETROLEUM BASE PRODUCTS. Contact with petroleum base products, such as cleaners or lubricants will permanently alter the glossy finish of polypropylene parts.**

NOTICE **The following products must not be applied on the plastic components used on the vehicles:**

- Gasoline
- Brake fluid
- Kerosene
- Diesel fuel
- Lighter fluid
- Varsol
- Naphtha
- Acetone
- Strong detergents
- Abrasive cleaners
- Waxes containing an abrasive or a cleaning agent in their formula.

MATERIAL TYPE	NON-COMPATIBLE CLEANING PRODUCTS
Polypropylene	ANY PETROLEUM BASE CLEANING PRODUCTS
	XPS ATV FINISHING SPRAY (P/N 219 701 704)
	XPS ATV CLEANING KIT (P/N 219 701 713)

vbs2012-006-002_a

DO NOT USE ON POLYPROPYLENE

Compatible Cleaning Products

MATERIAL TYPE	COMPATIBLE CLEANING PRODUCT
Polypropylene	XPS ATV WASH (P/N 219 701 702)
	Soapy water

vbs2012-006-001

SAFE FOR POLYPROPYLENE

REPAIRING BODY PARTS

The very first step before repairing plastic materials is to find out exactly which type of material is involved.

On the inner surface of each part, the production date, part number, and material code are molded in.

PLASTIC PARTS	
CODE	MATERIAL
PP	Polypropylene
EMA+PA	Surlyn

NOTICE **Some repair products are not compatible with certain plastics.**

⚠ WARNING

Polycarbonate windshields must never be repaired by welding or otherwise.

The following company provides a complete line of products to repair plastic materials:

CREST INDUSTRIES, INC.
Trenton, MI 48183
Phone: 734 479-4141
Toll Free: 1 800 822-4100
Fax: 734 479-4040
E-Mail: info@crestauto.com
www.crestauto.com

PROCEDURES

NOTE: The same procedure applies for RH and LH side. Most of the time, only one side is described in this subsection.

DECAL

Replacing the Decal

1. To remove a decal; heat old decal with a heat gun (low temperature) and peel off slowly.
2. Using isopropyl alcohol, clean the surface and dry thoroughly.

NOTICE **Do not apply isopropyl alcohol or solvent directly on decals. Use only in a well ventilated area.**

3. Just before beginning to affix the new decals, wipe the surface with a clean damp cloth and allow to dry.
4. Use a pallet to affix the decal. Always work from the center towards the edges.

NOTICE **Do not remove the pre-mask yet.**

5. Once the decal is correctly affixed, carefully make a final pass with the pallet. Apply enough pressure to make sure the glue sticks well on the surface.
6. Remove the pre-mask.

SIDE PANEL

Removing the Side Panel

1. Release all lock devices.

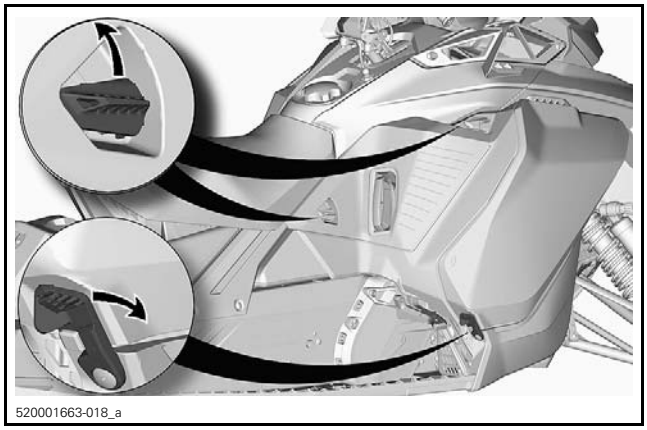

2. Open side panel.
3. Lift the side panel up and towards front.

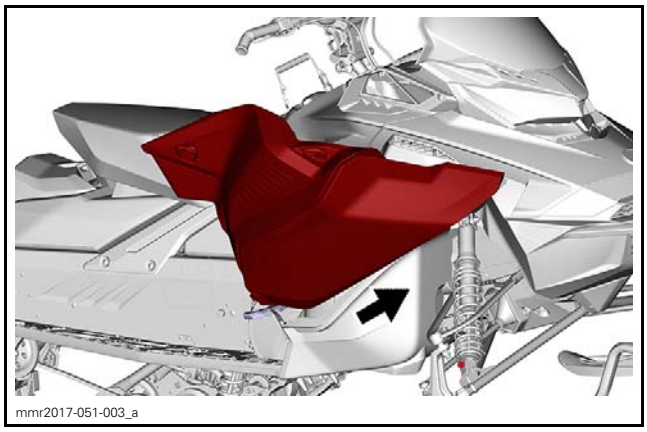

TYPICAL

NOTICE **Make sure to place panels in a safe place to avoid scratching.**

Installing the Side Panel

The installation is the reverse of the removal procedure.

WINDSHIELD

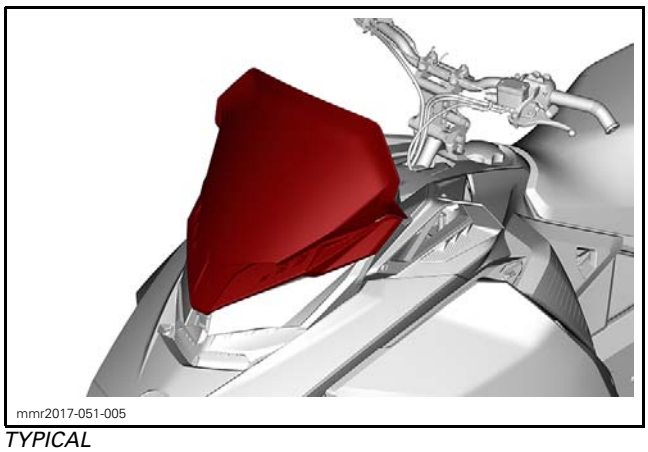

TYPICAL

Removing the Windshield

Place your hands on each side of windshield.

Pull the windshield until its pins come out of rubber grommets then pull in the center to remove center pin from grommet.

Installing the Windshield

The installation is the reverse of removal procedure.

Lubricate the grommets using soapsuds.

NOTICE **Do not lubricate grommets with any type of grease.**

Secure windshield by inserting the windshield pins into the grommets.

NOTE: Make sure not to push grommets through gauge support holes.

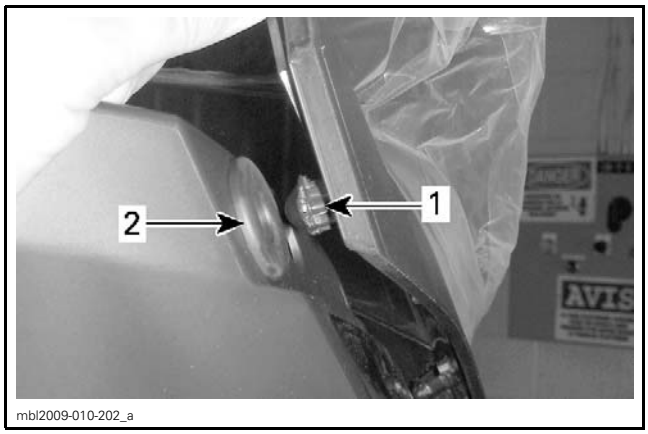

TYPICAL
1. Windshield tab
2. Gauge support front grommet

⚠ WARNING

Make sure that handlebar turns freely in both directions. Make sure that there is no contact at any time between handlebar wind deflectors (if so equipped) and windshield.

STORAGE COMPARTMENT COVER

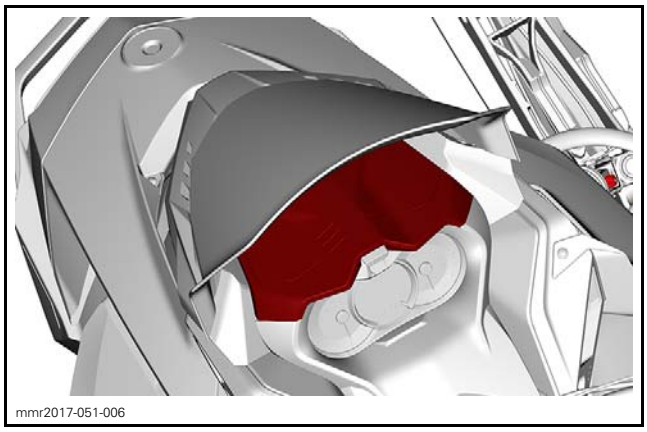

Removing the Storage Compartment Cover

1. Remove windshield. Refer to procedure in this subsection.
2. Open storage cover until it is almost vertical.

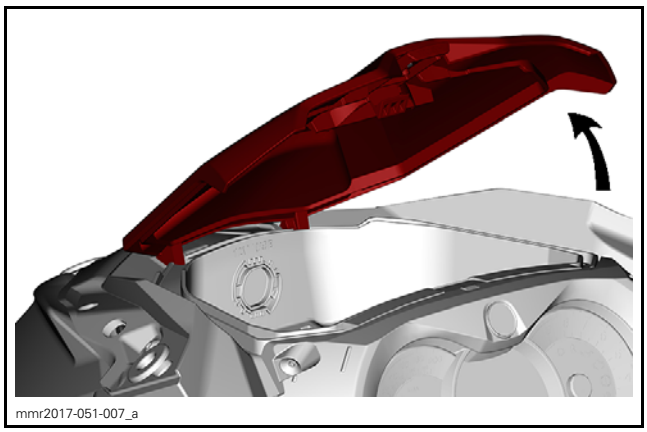

3. Pull out storage cover.

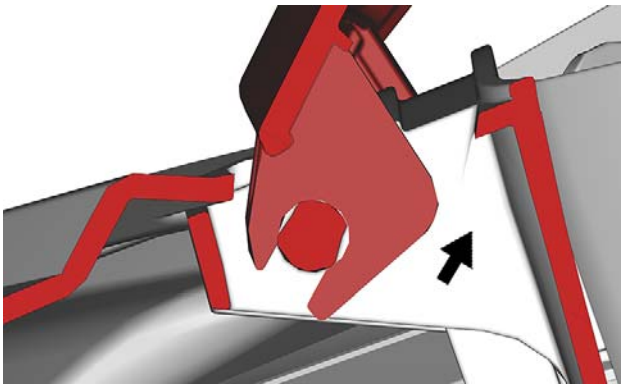
mmr2017-051-008_a

Installing the Storage Compartment Cover

The installation is the reverse of the removal procedure.

NOTICE **Ensure windshield is NOT installed. Otherwise, the storage cover could be damaged during installation.**

GAUGE SUPPORT

Removing the Gauge Support

Models Equipped With a 850 E-TEC Turbo

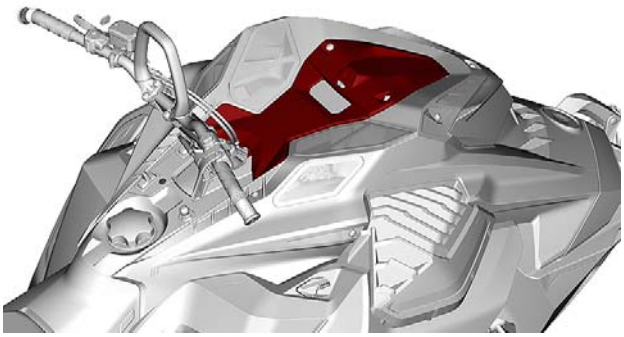
219101031-009-001

1. Remove the gauge support retaining screws.

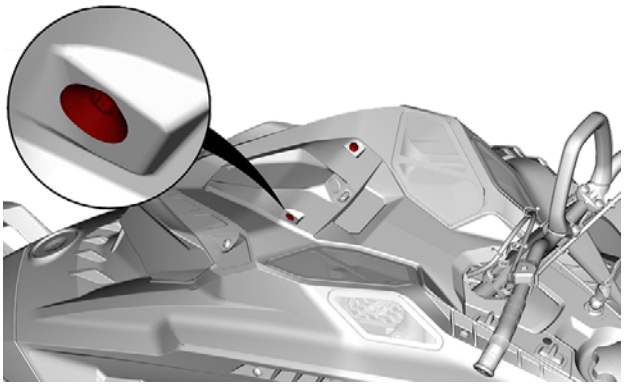
520002095-002

2. Remove the gauge support a per the illustration.

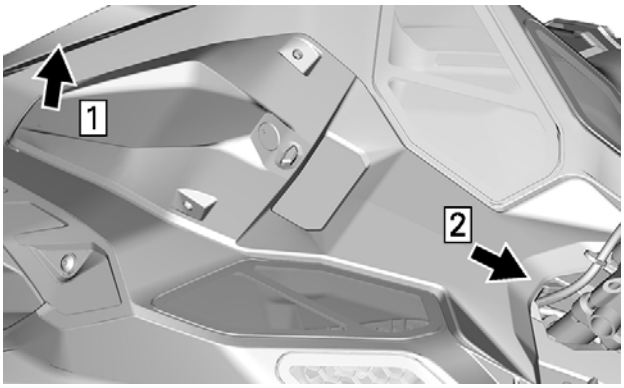

520002095-003_a

3. Disconnect the gauge and remove the support from the vehicle.

All other models

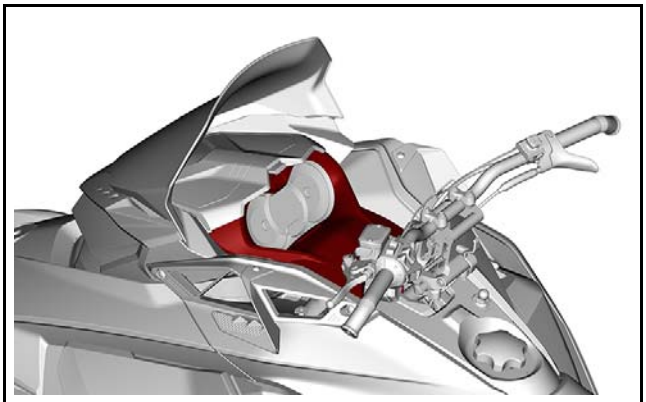
mmr2017-051-009

1. Remove the windshield. Refer to procedure in this subsection.
2. Open the storage compartment cover
3. Remove the gauge support screws.

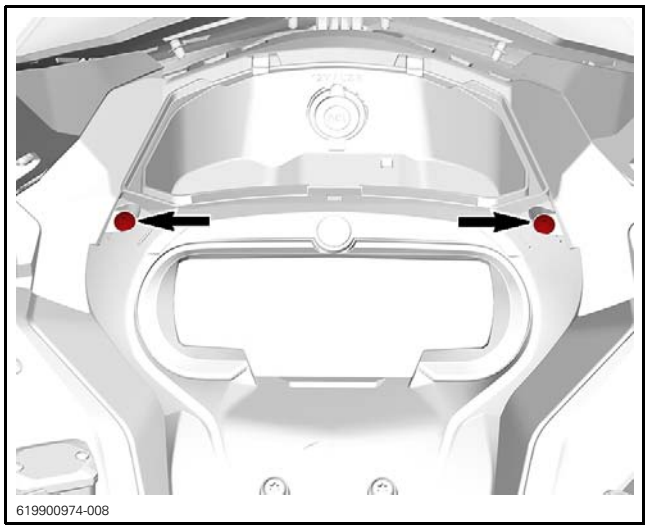

SE MODEL SHOWN

4. Lift the front of the gauge support, then slide it forward to remove it.

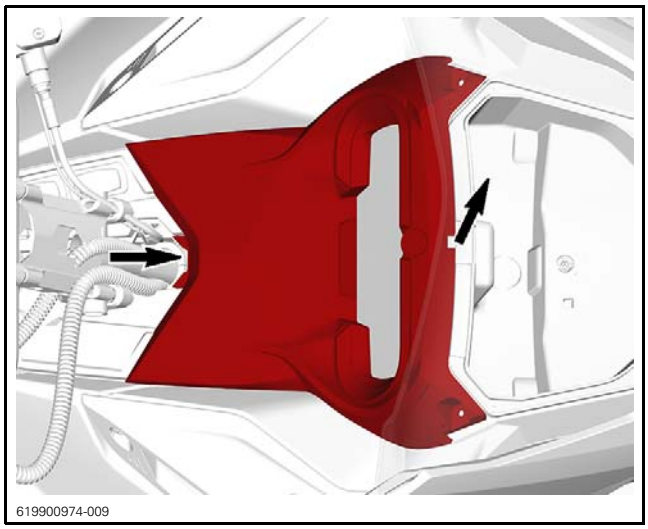

5. Remove the multifunction gauge from support. Refer to *GAUGE* subsection.

Installing the Gauge Support

The installation is the reverse of removal procedure.

TIGHTENING TORQUE	
Gauge support screw	2.3 N•m ± 0.2 N•m (20 lbf•**in** ± 2 lbf•**in**)

UPPER BODY MODULE

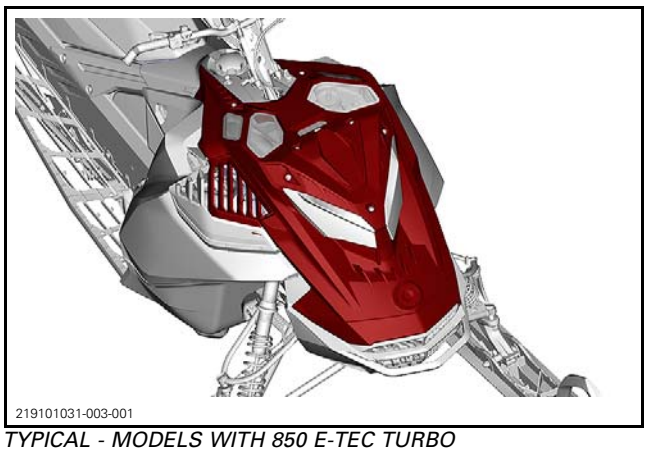

TYPICAL - MODELS WITH 850 E-TEC TURBO

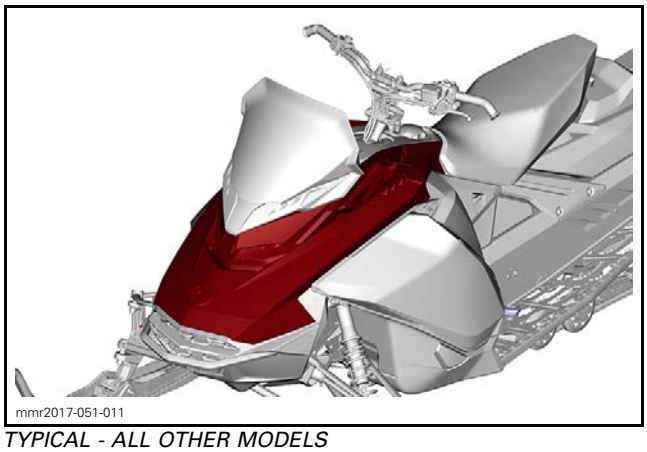

TYPICAL - ALL OTHER MODELS

Removing the Upper Body Module

1. Refer to procedures in this subsection and remove:
   - Side panels
   - Gauge support
   - Storage compartment and its cover.

Models with 850 E-TEC Turbo

2. Disconnect the headlight connectors.

All Other Models

3. Disconnect the MAPTS and headlight connectors.

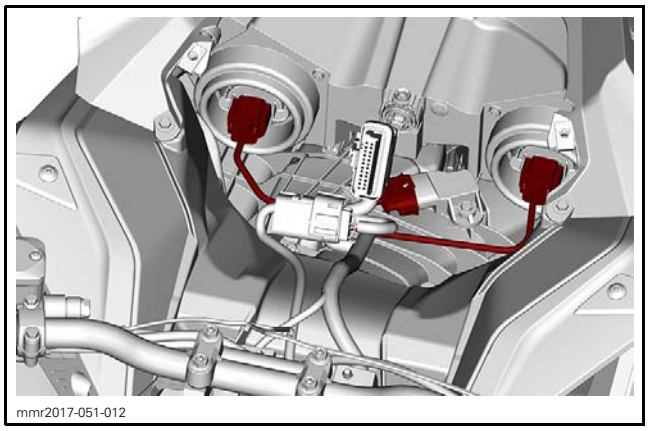
mmr2017-051-012

All Models

4. Loosen the air intake hose clamp.

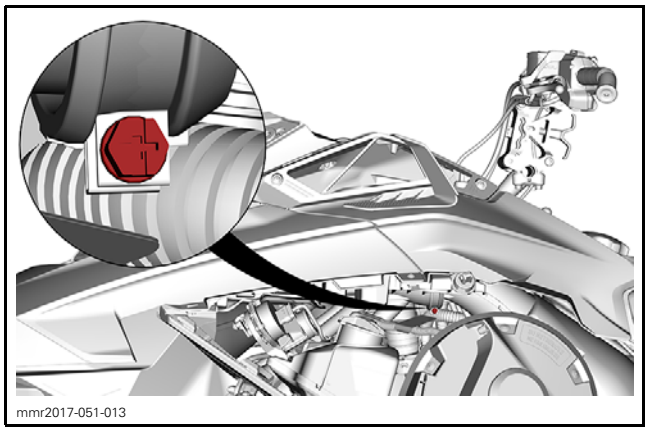
mmr2017-051-013

5. Remove the upper body module retaining screws.

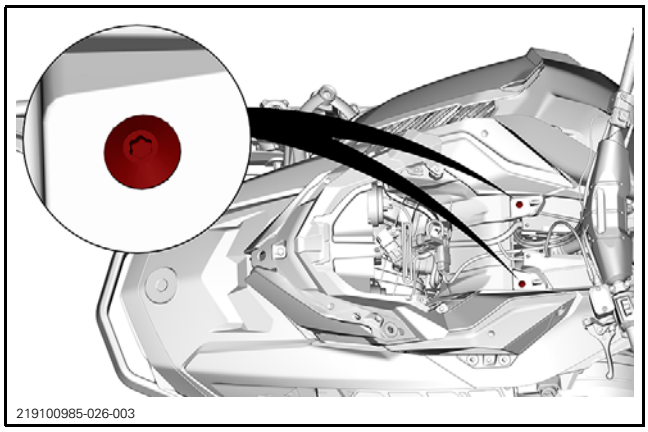
219100985-026-003

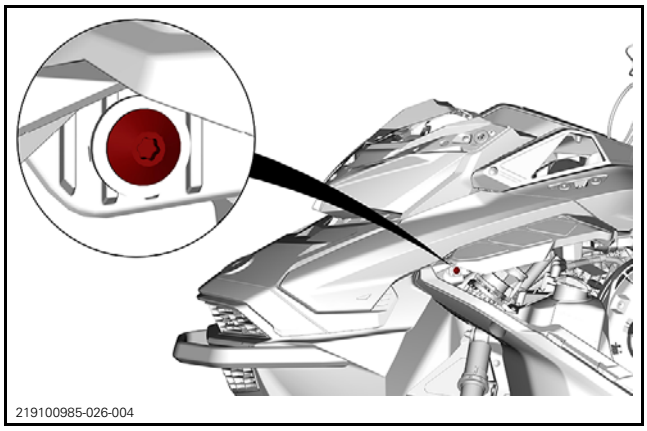
219100985-026-004

6. Lift the rear end of both lateral hood until their tabs come out of the rear console.

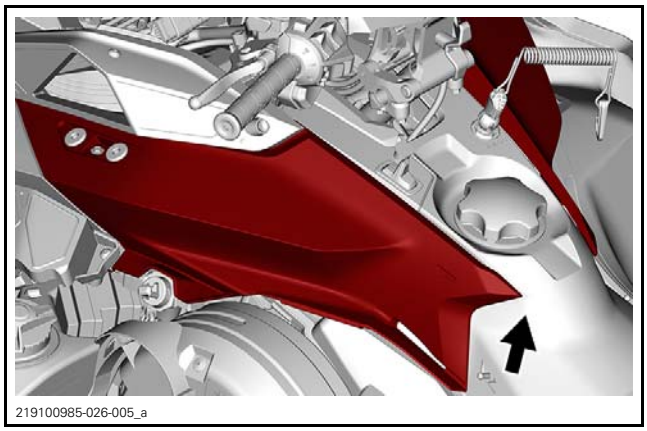
219100985-026-005_a

7. Remove the upper body module.
   7.1 Grab the upper body module in the gauge support section.
   7.2 Pull the module forward.
   7.3 Remove the module from the vehicle.

Installing the Upper Body Module

The installation is the reverse of the removal procedure. However, pay attention to the following.

Ensure to engage rear hood tabs in rear console.

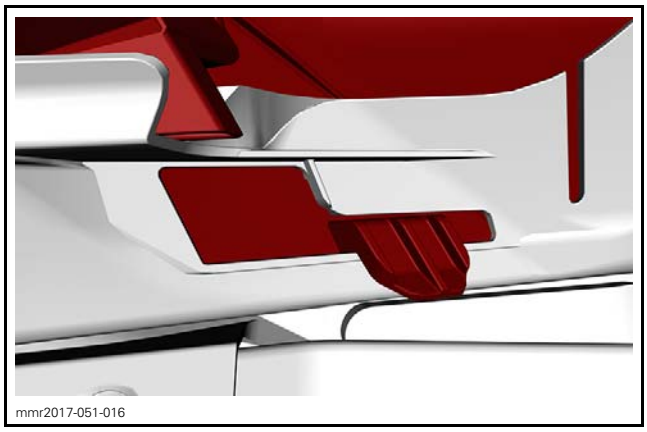
mmr2017-051-016

Ensure to connect the air intake hose.

TIGHTENING TORQUE	
Upper body module screw	1.8 N•m ± 0.2 N•m (16 lbf•**in** ± 2 lbf•**in**)

UPPER BODY MODULE COMPONENTS

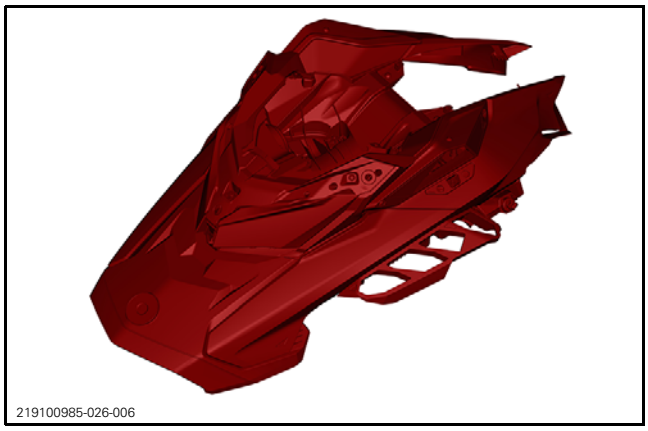

Disassembling the Upper Body Module

1. Remove the upper body module. Refer to procedure in this subsection.
2. Refer to *AIR INTAKE SYSTEM* subsection to disassemble the upper body module.
3. Remove both sides air deflector and air intake filter.

Assembling the Upper Body Module

The installation is the reverse of removal procedure.

TIGHTENING TORQUE	
Upper body module screw	1.8 N•m ± 0.2 N•m (16 lbf•**in** ± 2 lbf•**in**)

CONSOLE

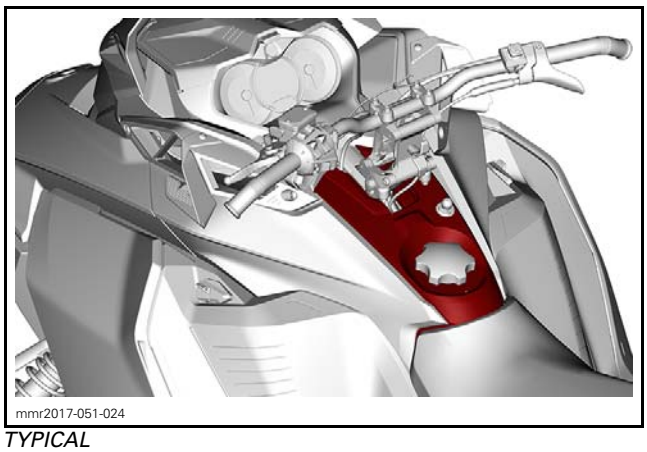

TYPICAL

Removing the Console

1. Remove *UPPER BODY MODULE*. Refer to procedure in this subsection.
2. Remove the seat. Refer to procedure in this subsection.
3. Cut harness locking ties.
4. Remove console nuts.

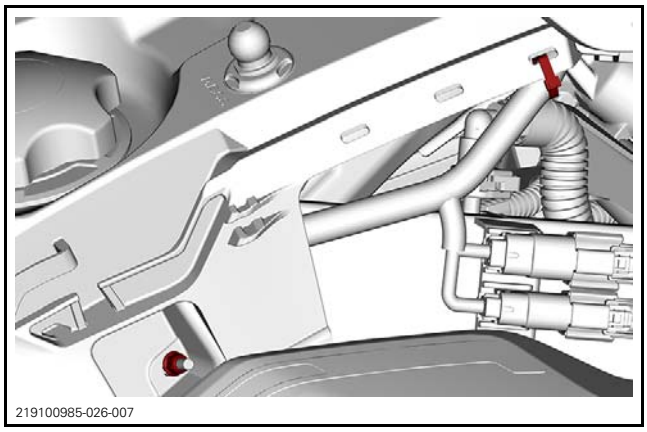

5. Remove fuel tank cap.
6. Lift up the console and unplug all connectors.
7. Install fuel tank cap.

Installing the Console

The installation is the reverse of the removal procedure.

TIGHTENING TORQUE	
Console nut	2.3 N•m ± 0.2 N•m (20 lbf•**in** ± 2 lbf•**in**)

FRONT BUMPER

Removing the Front Bumper

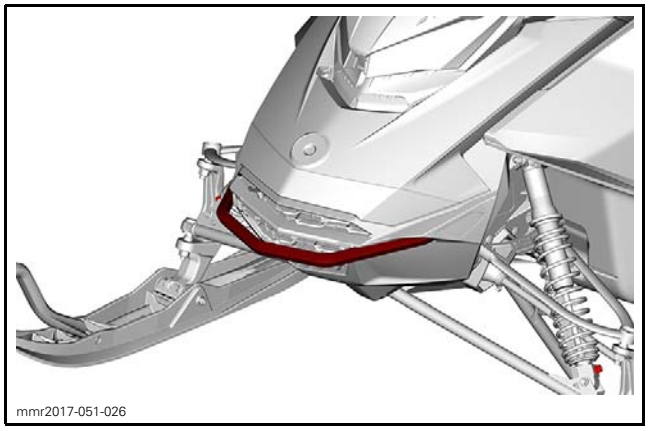
mmr2017-051-026

1. Remove tuned pipe. Refer to *EXHAUST SYSTEM* subsection.
2. Drill out rivets from front bumper.

REQUIRED TOOL
SUPERTANIUM DRILL BIT 3/16" (P/N 529 031 800)

3. Remove front bumper screws.

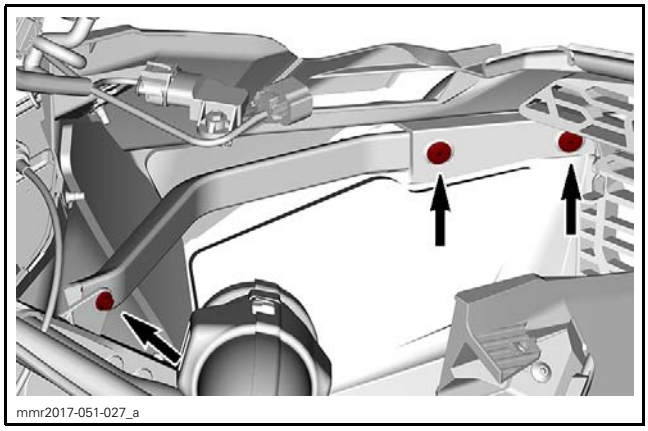
mmr2017-051-027_a

4. Pull out bumper towards front.

Installing the Front Bumper

The installation is the reverse of the removal procedure. However, pay attention to the following.

Make sure to install front bumper as shown.

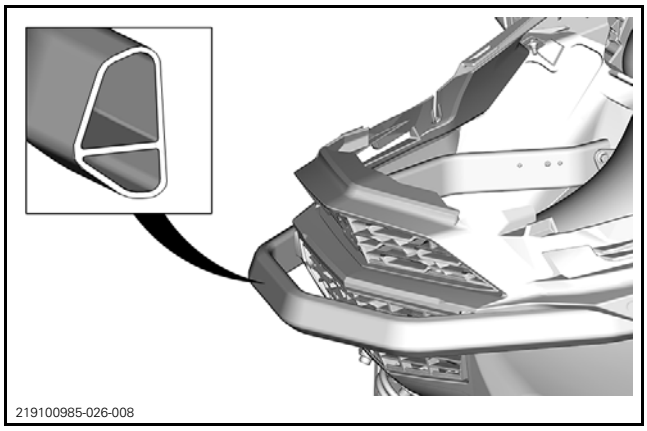
219100985-026-008

TIGHTENING TORQUE	
Front bumper nut	5 N•m ± 0.5 N•m (44 lbf•**in** ± 4 lbf•**in**)

FRONT BOTTOM PAN

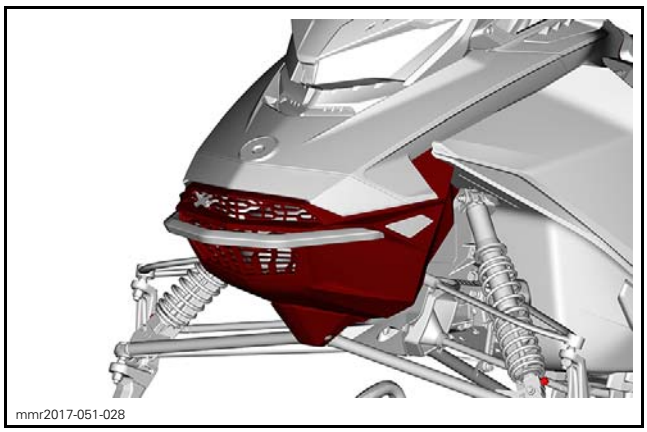
mmr2017-051-028

TYPICAL

Removing the Front Bottom Pan

1. Lift front of vehicle until skis are off the ground.
2. Place the front portion of frame on a wooden box to support it securely.

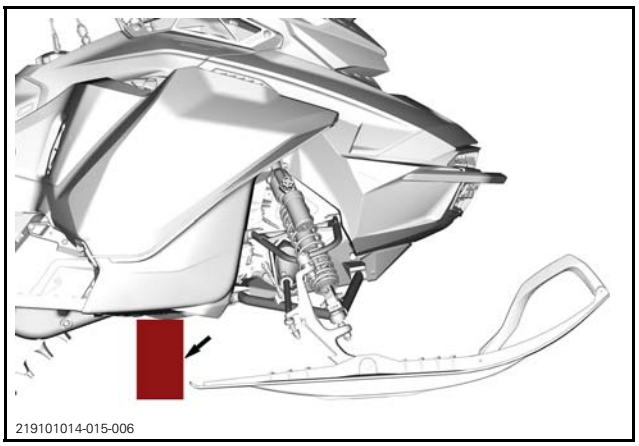
219101014-015-006

3. Remove *FRONT BUMPER*. Refer to procedure in this subsection.

If the front bottom pan does not need to be replaced, the bumper may remain attached to bottom pan.

4. Remove bottom pan screws.

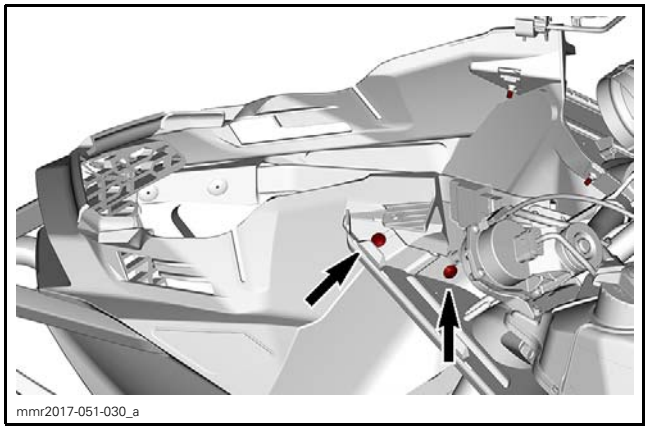

TYPICAL

5. Remove front shock absorbers. Refer to *FRONT SUSPENSION* subsection.
6. Drill out all rivets retaining bottom pan.

NOTE: Refer to *FRAME* for proper procedure when drilling rivets retaining plastic parts.

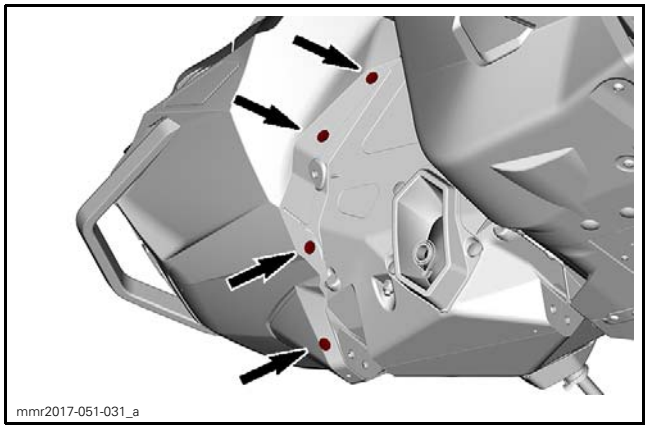

LH SIDE SHOWN — SOME PARTS REMOVED FOR CLARITY

7. Remove bottom pan.

Installing the Front Bottom Pan

The installation is the reverse of the removal procedure.

TIGHTENING TORQUE	
Bottom pan screw	1.8 N•m ± 0.2 N•m (16 lbf•**in** ± 2 lbf•**in**)

SIDE BOTTOM PAN

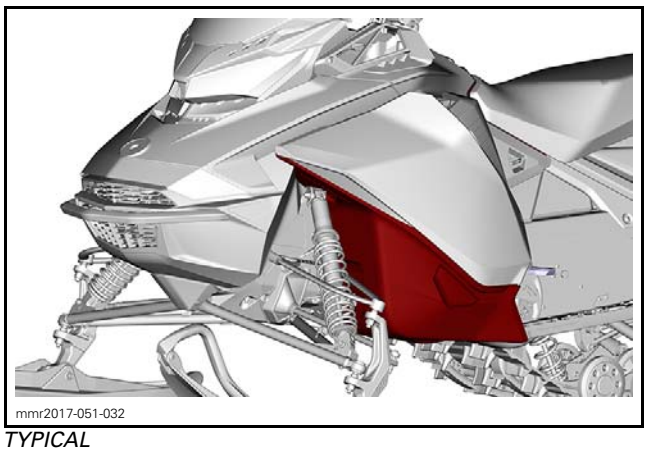

TYPICAL

Removing the Side Bottom Pan

1. Remove the side panel. Refer to procedure in this subsection.
2. Lift front of vehicle until skis are off the ground.
3. Place the front portion of frame on a wooden box to support it securely.

NOTE: Ensure to clear side bottom pans so they can move freely.

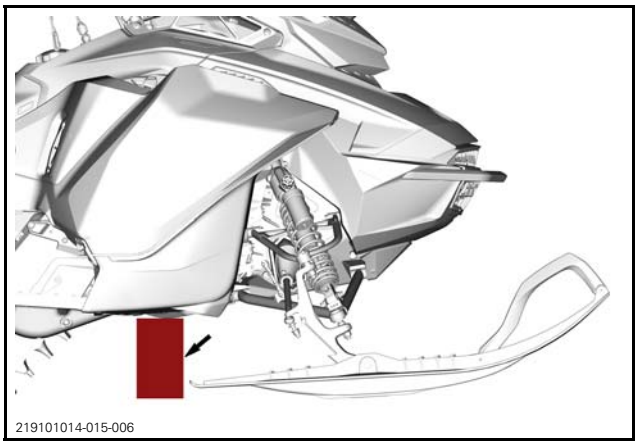

4. Disconnect vent tube from side bottom pan, and remove the screws.

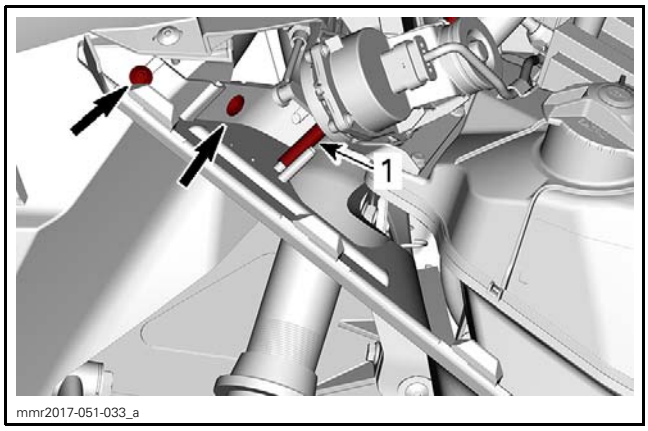

1. Vent tube

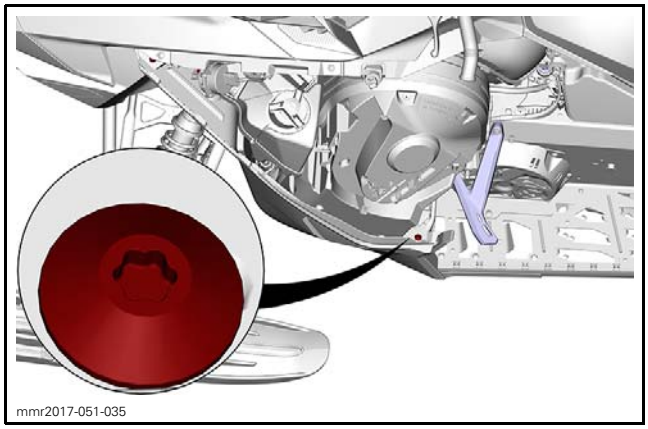

TYPICAL

5. To remove the LH side bottom pan, remove the screws and washers.

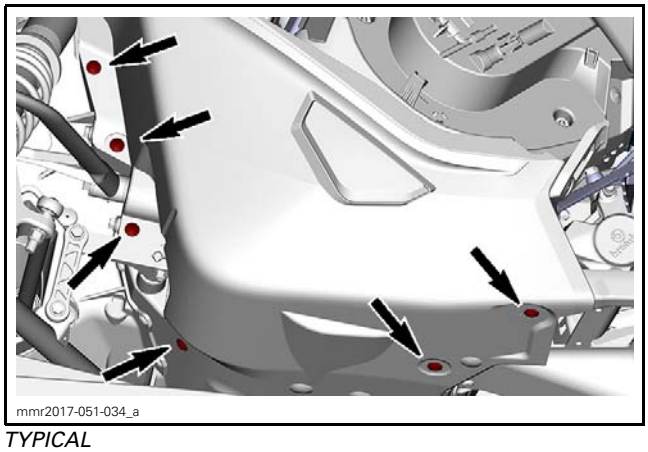

TYPICAL

6. To remove the RH side bottom pan, drill out all rivets

NOTE: Refer to *FRAME* for proper procedure when drilling rivets retaining plastic parts.

NOTICE **Be careful not to drill through muffler.**

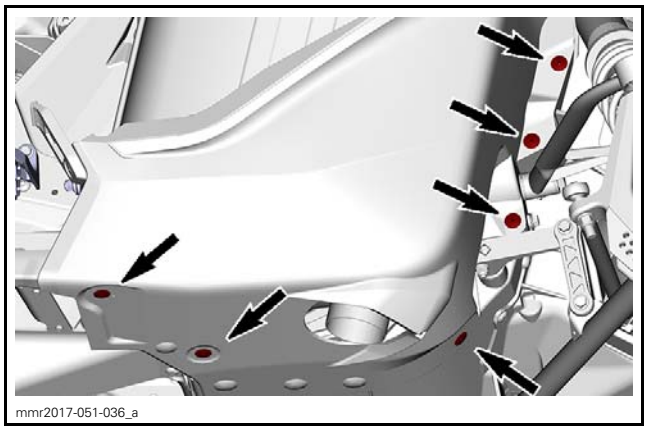

TYPICAL - RH SIDE SHOWN

Installing the Side Bottom Pan

The installation is the reverse of the removal procedure. However, pay attention to the following.

Make sure to install side bottom hull flip into the frame slot.

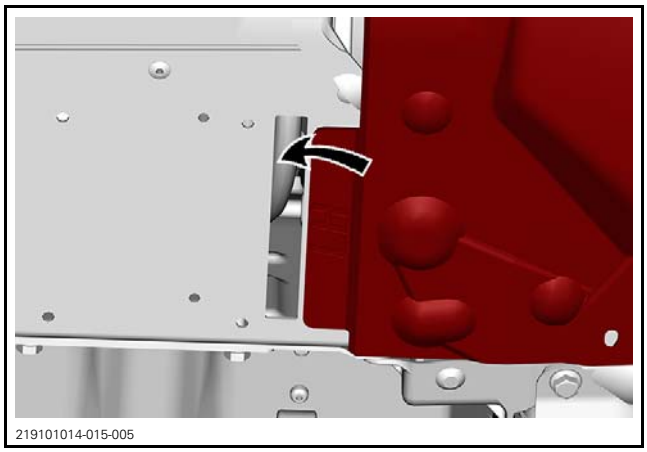

BOTTOM VIEW

Reinstall the washers at the correct position.

TIGHTENING TORQUE	
Side bottom pan screw on pinched nut	2.8 N•m ± 0.2 N•m (25 lbf•**in** ± 2 lbf•**in**)
Side bottom pan screw on panel nut	1.8 N•m ± 0.2 N•m (16 lbf•**in** ± 2 lbf•**in**)

OPERATOR SEAT

Removing and Installing the Operator Seat

1. Remove passenger seat if equipped. Refer to procedure in this subsection.
2. While pushing in the center of the seat towards front, pull on both sides, to unlock, and slide rearwards.

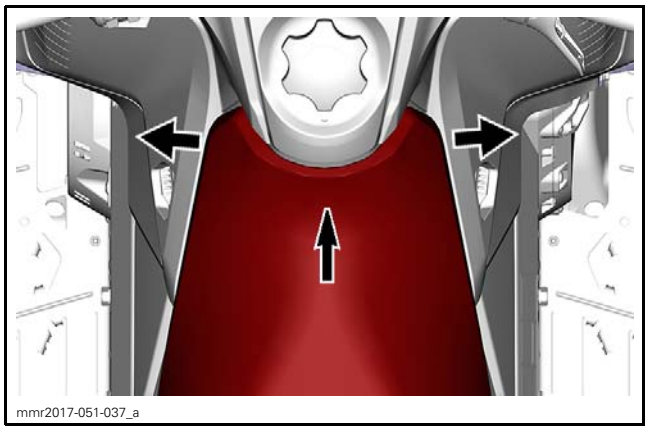

The installation is the reverse of the removal procedure.

Ensure the seat is locked.

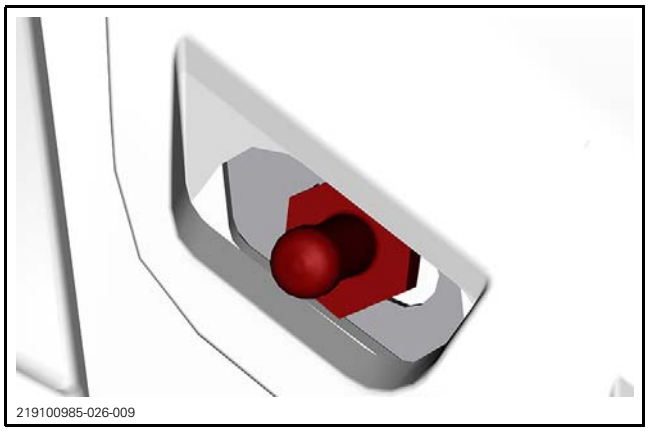

FOAM REMOVED FOR CLARITY

Replacing the Seat Cover

Remove seat.

Remove the old seat cover. Check the foam and replace it if necessary.

Install the new seat cover with staples.

NOTICE **Ensure to use the proper length staples. Extra long staples would pierce the exposed side of the leatherette.**

NOTE: For an easier installation, it is highly recommended to use an electric stapler.

Ensure that the seat rest firmly against a hard surface such as a piece of wood. This is done to get the staples completely pushed in place.

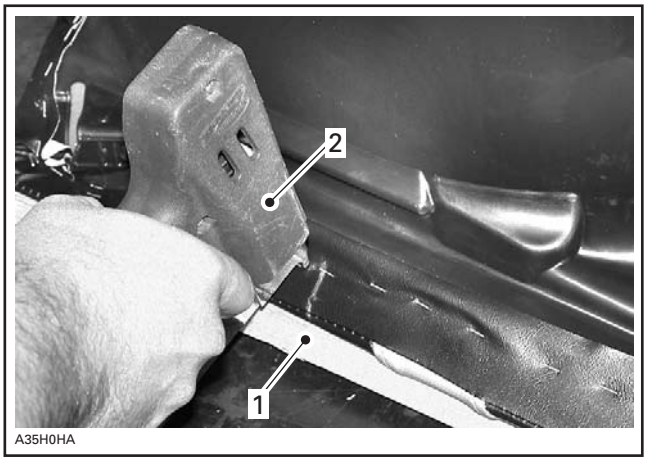

TYPICAL
1. *Piece of wood*
2. *Tacker*

The seat needs a special stapling procedure to ensure a strong and durable seat cover installation. Make sure the staples on the rear part of the seat are installed as shown.

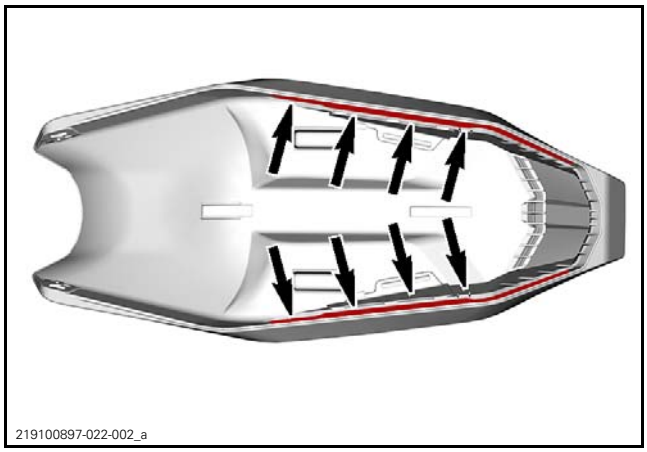

The staples go inside the crease on each side of the seat.

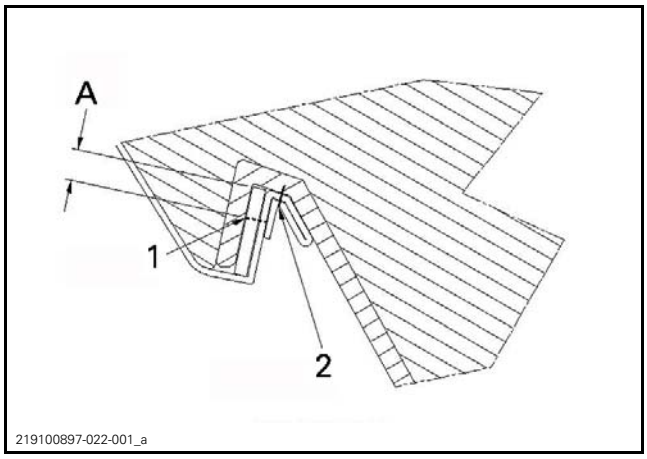

A = 5 MM (1/4 IN)
1. *Sewing*
2. *Staple*

After seat cover installation, cut out excess material leaving 5 mm (1/4 in) between staple and edge.

PASSENGER SEAT (ON APPLICABLE MODELS)

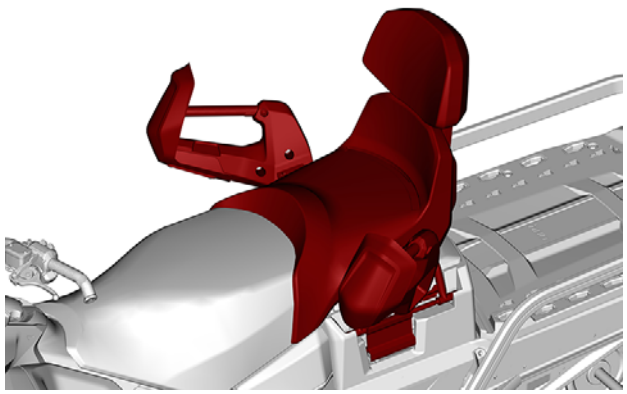

520002132-010

⚠ WARNING

Any passenger must be able to firmly lay is feet on the footrests and keep his hands on the handholds at all times when seated. Respecting those physical criteria is important to ensures that the passenger is stable and to reduce the risks of ejection.

Removing the Passenger Seat

1. Unlock seat latch on both sides.

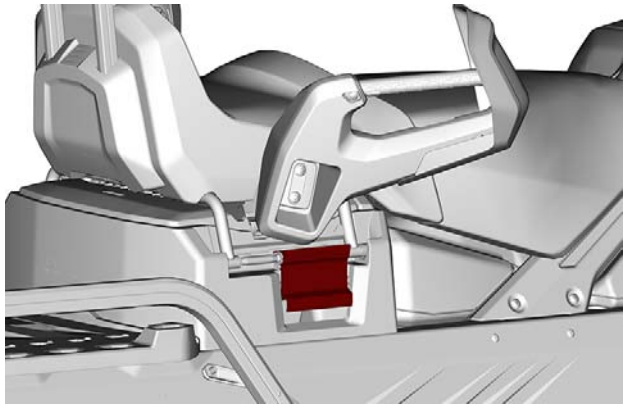

520002131-300

2. Lift the seat to disconnect the electrical connector.
3. Remove passenger seat.

Installing the Passenger Seat

The installation is the reverse of removal procedure. However, pay attention to the following.

Ensure to reach the second step when latching.

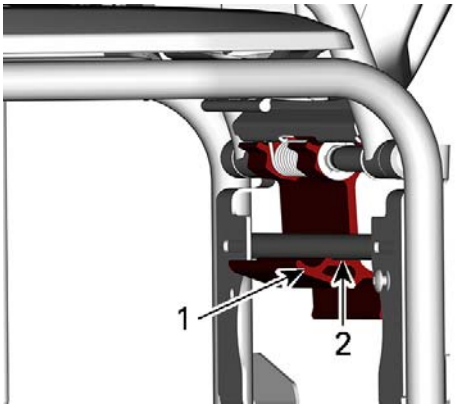

520002131-301

1. First step
2. Second step

⚠ CAUTION Ensure the latch is on the second step before riding.

STORAGE COMPARTMENT

Removing the Storage Compartment

1. Remove passenger seat and backrest. Refer to this subsection.
2. Open storage compartment, remove battery cover and all mounting screws.

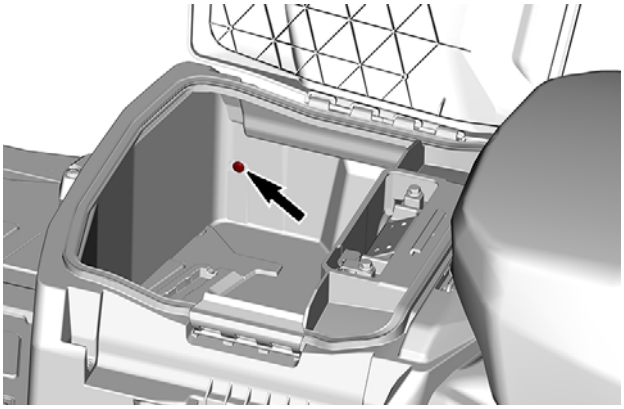

520002131-016

LH SIDE SCREW SHOWN

3. Remove storage compartment.

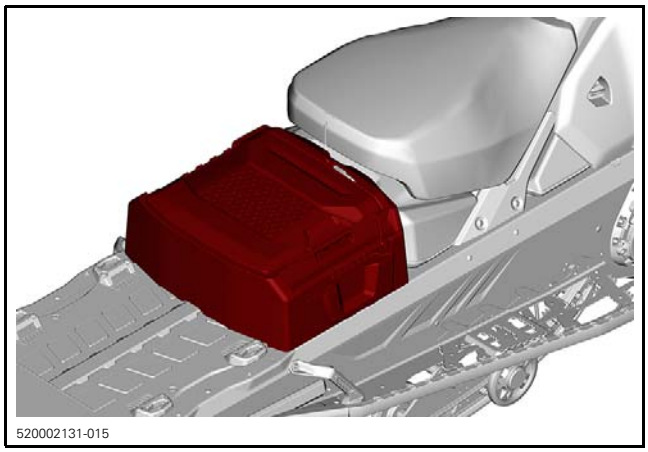
520002131-015

Installing the Storage Compartment

The installation is the reverse of removal procedure.

REAR HITCH

Removing the Rear Hitch

Remove following fasteners.

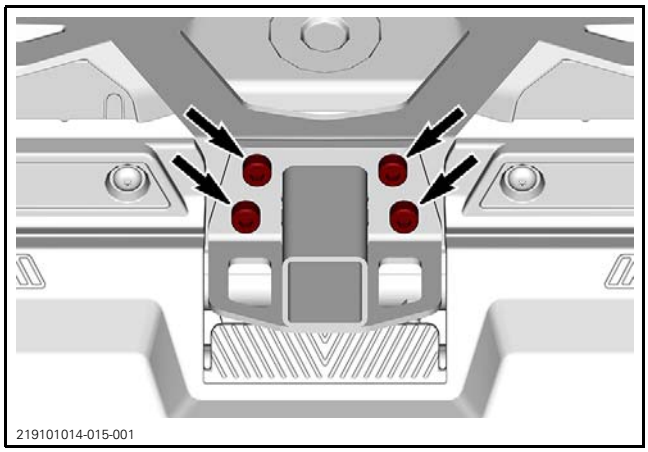
219101014-015-001

Installing the Rear Hitch

The installation is the reverse of removal procedure. However, pay attention to the following.

TIGHTENING TORQUE	
Rear hitch nuts	31.5 N•m ± 3.5 N•m (23 lbf•ft ± 3 lbf•ft)

REAR RACK

Removing the Rear Rack

Remove rear hitch. Refer to procedure in this subsection.

Remove following fasteners on both side.

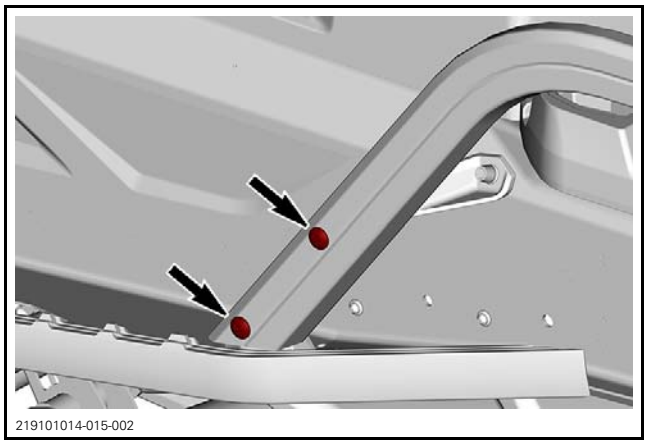
219101014-015-002

Installing the Rear Rack

The installation is the reverse of removal procedure.

REAR BUMPER (IF EQUIPPED)

TIGHTENING TORQUE	
Rear bumper screws	16 N•m ± 2 N•m (142 lbf•**in** ± 18 lbf•**in**)

MULTI-LINQ PLATE

Removing the Multi-LinQ Plate

Remove storage compartment under passenger seat. Refer to this subsection.

Remove following fasteners.

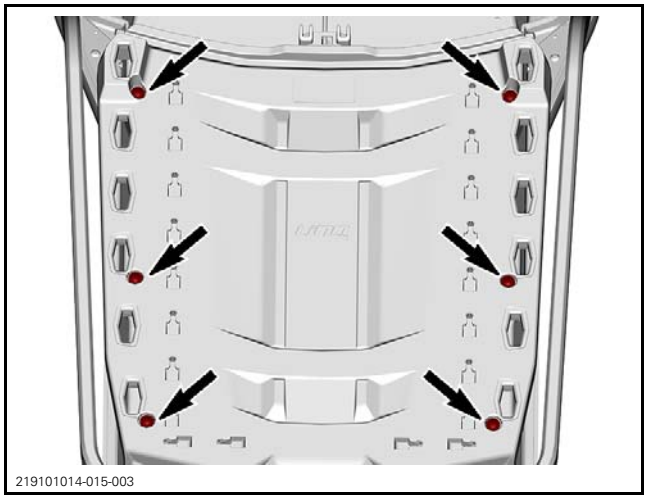
219101014-015-003

Slightly lift the rear portion of the multi-LinQ plate to disconnect the taillight connectors.

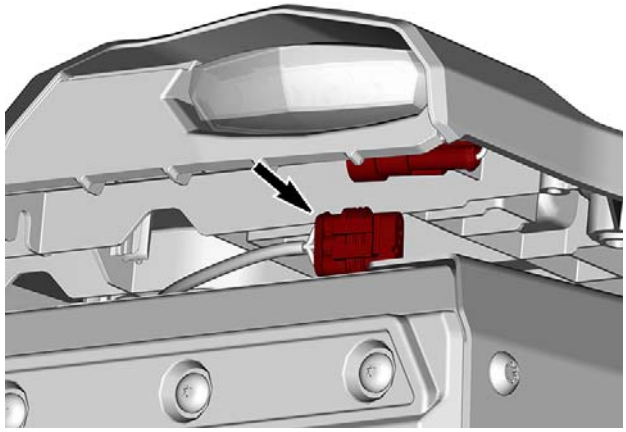

219101014-015-004

Installing the Multi-LinQ Plate

The installation is the reverse of removal procedure. However, pay attention to the following.

Make sure to avoid pinching the wiring harness when installing the multi-LinQ plate in its place.

TIGHTENING TORQUE	
Multi-LinQ plate screws	7 N•m ± 1 N•m (62 lbf•**in** ± 9 lbf•**in**)

FRAME

SERVICE TOOLS

Description	Part Number	Page
RADIATOR INSTALLATION GAUGES	529 036 422	357
SUPERTANIUM DRILL BIT 3/16"	529 031 800	348

SUSPENSION MODULE

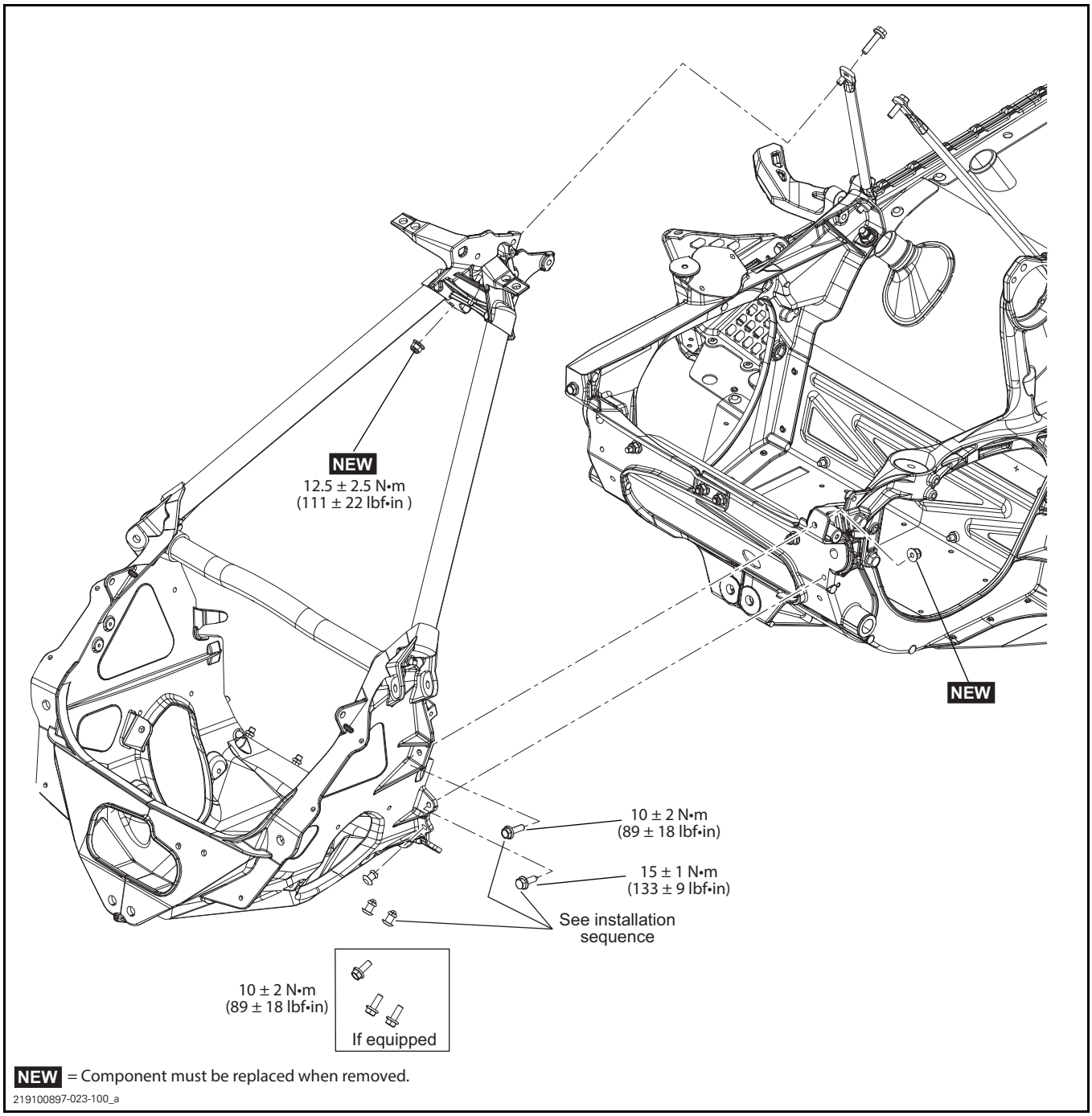

ENGINE MODULE

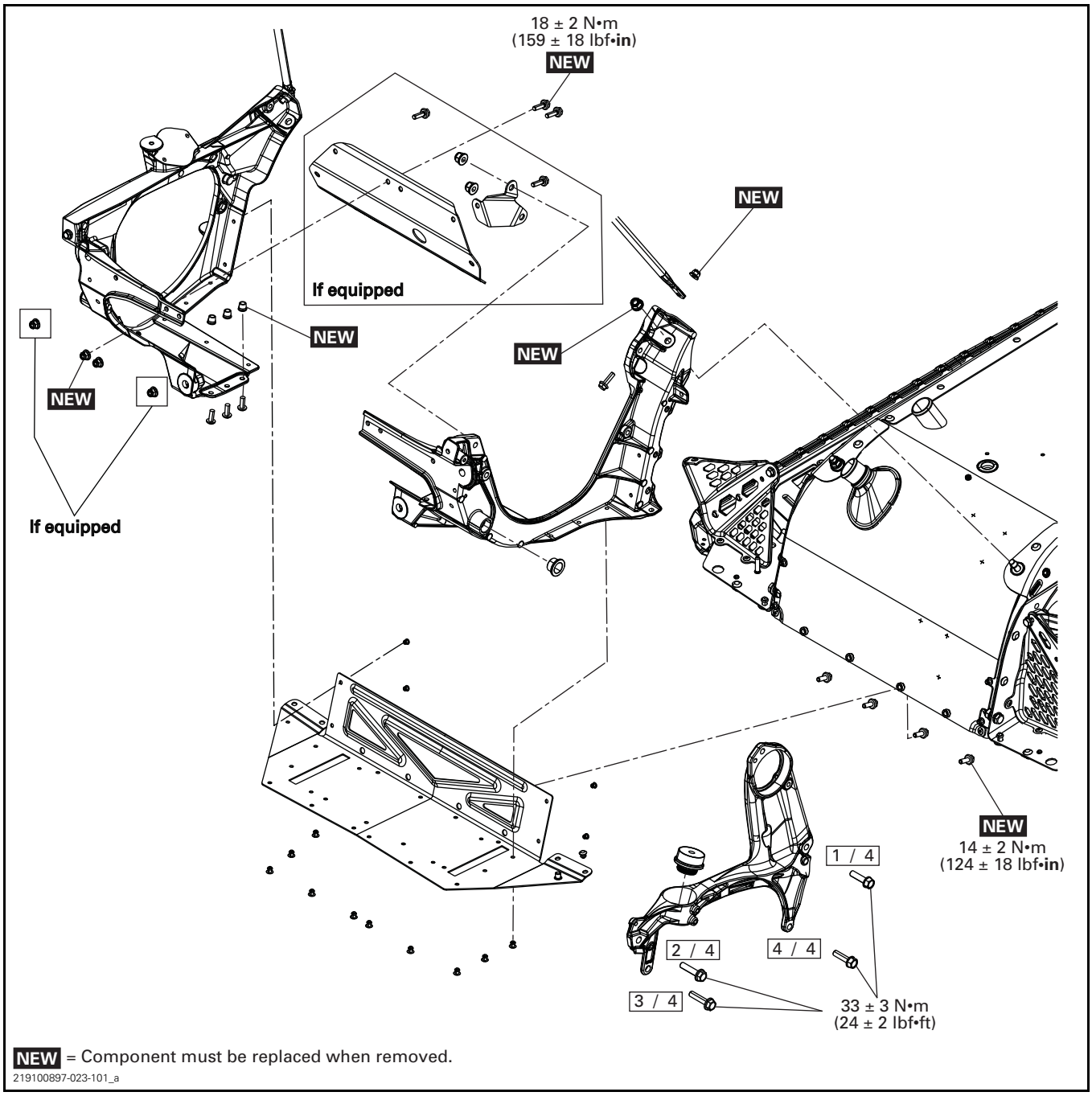

NEW = Component must be replaced when removed.

219100897-023-101_a

TUNNEL MODULE

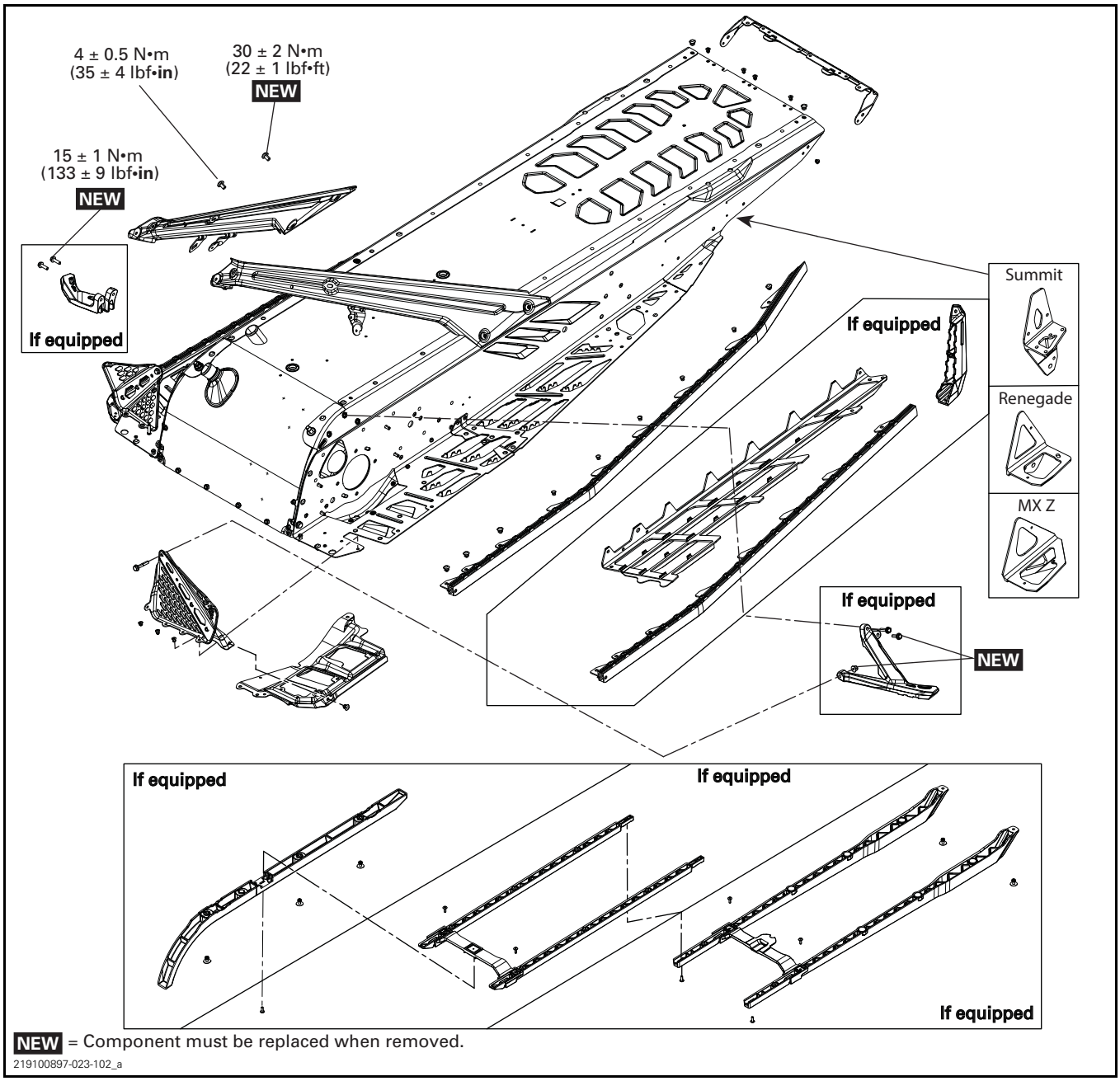

NEW = Component must be replaced when removed.

219100897-023-102_a

GENERAL

During assembly/installation, use the torque values and the service products as in the exploded views.

Clean threads before applying a threadlocker. Refer to *SELF-LOCKING FASTENERS* and *LOCTITE APPLICATION* at the beginning of this manual for complete procedure.

⚠ WARNING

Torque wrench tightening specifications must be strictly adhered to.
Locking devices (e.g.: locking tabs, elastic stop nuts, cotter pins, etc.) must be replaced with new ones.

Check for loose, bent, worn out, rusted or otherwise damaged components. Replace the faulty components.

PROCEDURES

RIVETS

For proper drilling instructions and to prevent premature wear, follow the procedures as detailed.

NOTICE **When removing rivets, do not enlarge or deform the rivet holes in the frame.**

Removing a Self-Percing Rivet

Henrob and Thomson rivets are self-piercing rivets. They are installed with specific robotized equipment.

1. Using a grinding disk, grind the rivet end.

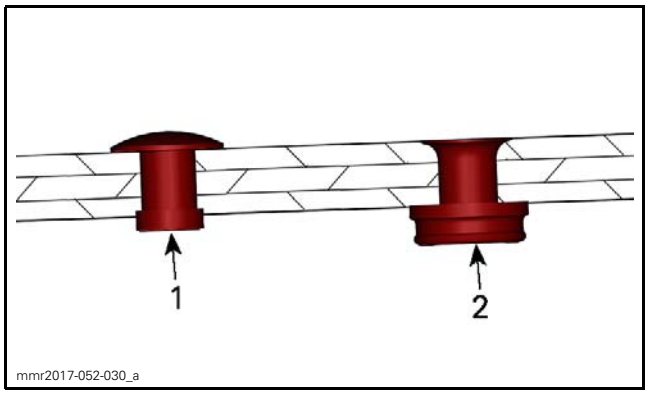

1. Thomson rivet
2. Henrob rivet

2. Support the frame around the rivet head with a socket on the opposite side to avoid warpage.

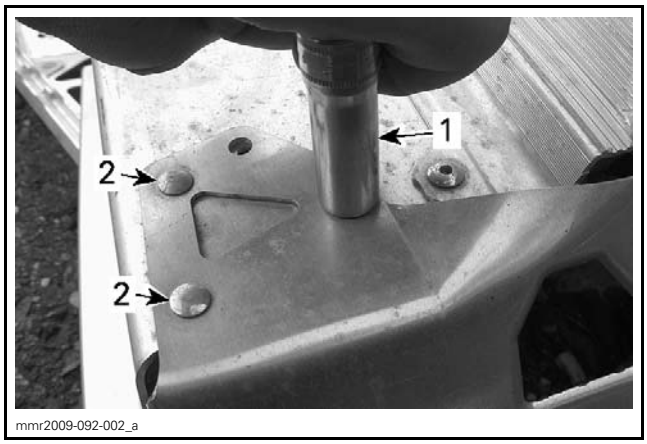

TYPICAL
1. 11 mm socket over a rivet head
2. Rivet heads

3. Drive out remaining rivet using a punch.

Removing a Pop Rivet

Stavex, Avibulb, and Hemlock rivets are standard pop rivets. They are installed with standard manual or pneumatic tool.

1. Drill rivet head sufficiently to cut through it.

NOTE: To drill a Hemlock rivet, remove the riveting nail using a punch first.

NOTICE **It is highly recommended to support the frame locally around a Hemlock rivet when punching its nail out.**

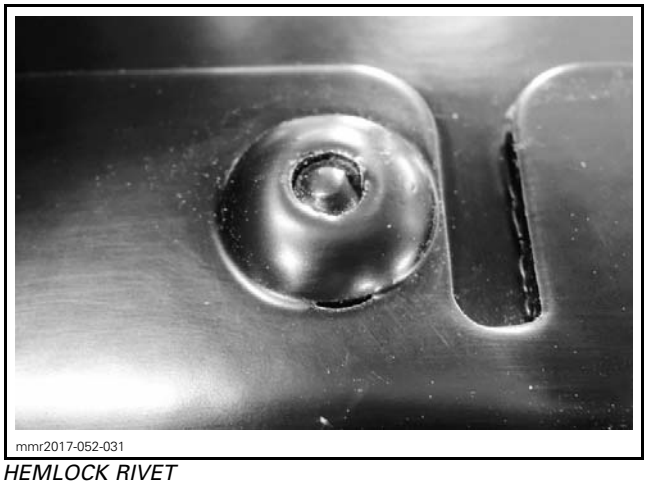

HEMLOCK RIVET

RECOMMENDED TOOL
SUPERTANIUM DRILL BIT 3/16" (P/N 529 031 800)

NOTICE **Drill only sufficiently to cut rivet head. Do not drill into frame material, or part secured using the rivet. When rivet is used to secure a plastic part, use pliers to avoid rotation of rivet with drill bit and heating or melting of the plastic part.**

2. Using a small punch, drive out the remaining rivet end.

Removing a HUCK Rivet

Huck rivet is a 2 parts type rivet. It is installed with a specific pneumatic tool.

1. Using a cut-off tool, cut the rivet retainer without touching the retainer's shoulder.

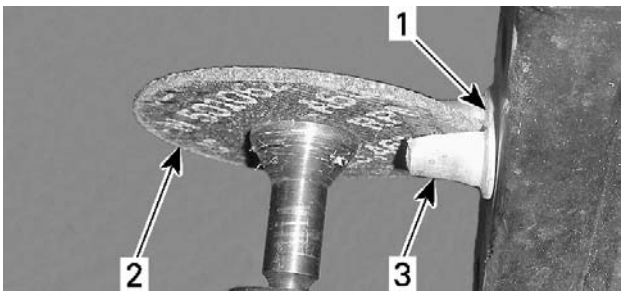

mmr2008-051-125_a

1. Rivet retainer's shoulder
2. Cutter wheel
3. Rivet retainer

NOTE: Apply a thin layer of grease on cutter wheel to increase its durability.

2. Break the rivet retainer's shoulder using a chisel.
3. Use a small punch to drive out the rivet stem.

FRAME

Cleaning the Frame

Clean frame and tunnel with appropriate cleaners and rinse with high pressure hose.

NOTE: For bare aluminum frames use only aluminum cleaner and follow instructions on container.

NOTICE **Never direct high-pressure water jet towards decals. They will peel off.**

Welding the Frame

No welding is permitted unless it is specified on a BRP bulletin.

Repairing the Frame

NOTE: The following is specific information for aluminum chassis painting. Use common painting techniques.

1. Sand the area to be painted.
2. Clean and dry the area.
3. Apply a thin layer of paint of the appropriate color.
4. Allow paint to dry before re-coating.

NOTE: Paint takes approximately 15 minutes to dry following application.

5. Apply a thin coat of clear.

NOTE: Immediately after the clear coat application, apply a thin coat of HR50 blending solvent **around** the painted area.

6. Allow clear coat to dry.

NOTE: Clear coat takes approximately 2 hours to dry following application.

REAR BUMPER

Refer to *BODY* subsection for rear bumper removal and installation procedure.

REAR FRAME MEMBER

Removing the Rear Frame Member

1. Refer to *BODY* subsection to remove the following:
   – Seat
   – Upper body module
   – Rear console.
2. Remove fasteners as per the following illustrations.

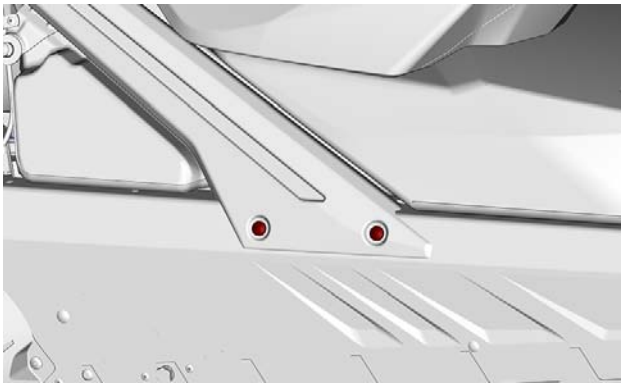
mmr2017-052-001

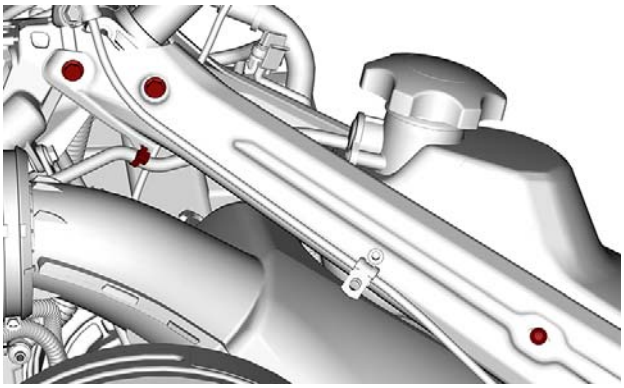
mmr2017-052-002

3. Remove rear frame member.

Installing the Rear Frame Member

The installation is the reverse of the removal procedure. However, pay attention to the following.

NOTE: Install all screws and nuts before tightening them.

Refer to exploded view for proper tightening torque.

FRONT SUSPENSION MODULE

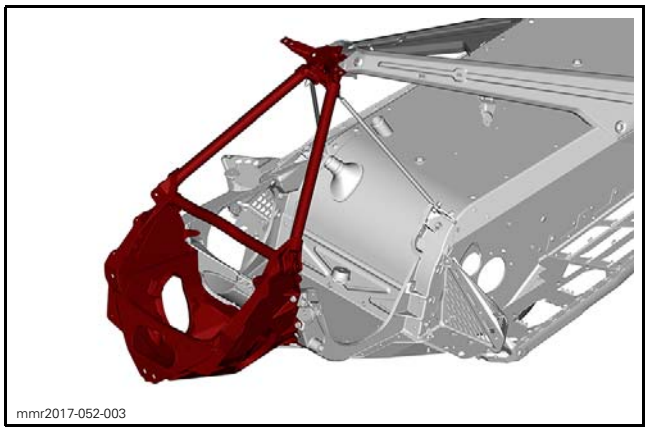
mmr2017-052-003

Removing the Front Suspension Module

1. Lift front of vehicle until skis are off the ground.
2. Place a wooden box under the engine module to support the frame securely.
3. Refer to the appropriate subsection and remove:
   – Engine
   – Steering column.
4. Detach the brake hose clamp next of the upper steering column support.
5. Detach side frame members from upper steering column support.

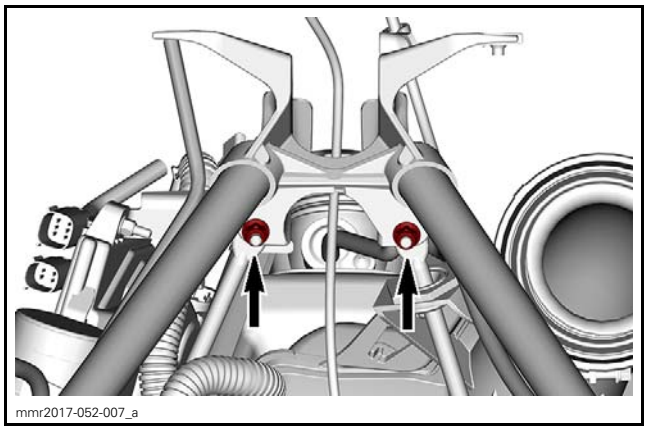
mmr2017-052-007_a

6. Remove the front suspension assembly in the following manner:
   6.1 Detach tie-rod ends from steering column.
   6.2 Remove upper shock absorber screws.
   6.3 Remove screw that secures stabilizer link to lower arm.

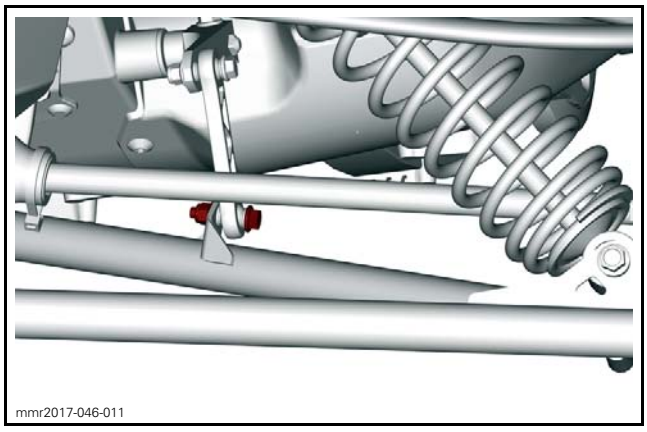
mmr2017-046-011

   6.4 Remove upper and lower suspension arms screws and nuts. Refer to *FRONT SUSPENSION* subsection.
   6.5 Remove front suspension assembly from vehicle.
7. Remove the stabilizer bar. Refer to *FRONT SUSPENSION* subsection.
8. Remove the front bottom pan. Refer to *BODY* subsection.

NOTE: Keep the front bumper installed on front bottom pan.

9. Cut locking ties that secure vents and electrical harness to module tubes.

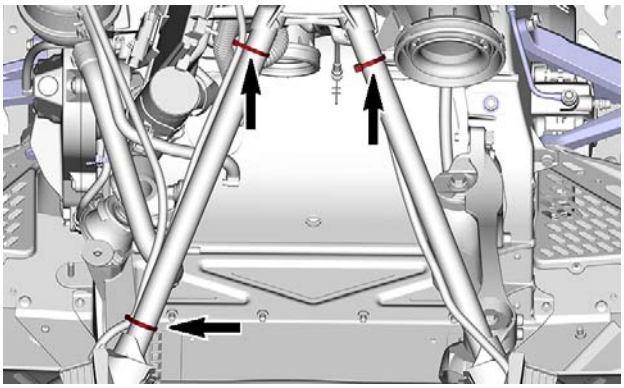
mmr2017-052-004_a

10. If the suspension module needs to be replaced, remove:
    - Steering rack / lower steering column support
    - Tie rod boots.

    Refer to *STEERING SYSTEM* subsection.
11. Remove the lower retaining fasteners.

For riveted models, refer to *REMOVING A POP RIVET* at the beginning of this subsection for procedure.

NOTICE **It is highly recommended to support the frame locally around a Hemlock rivet when punching its nail out.**

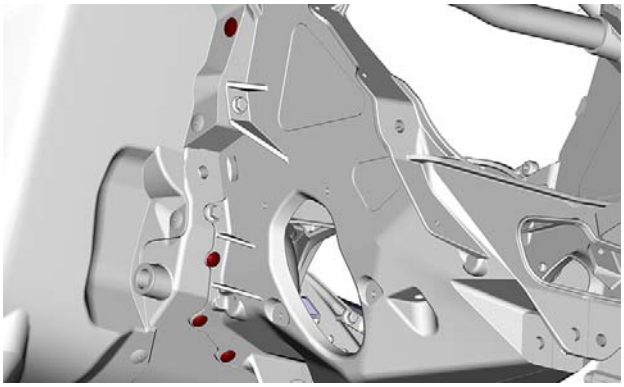
mmr2017-052-005
RH SIDE SHOWN

12. Remove the upper retaining fasteners.

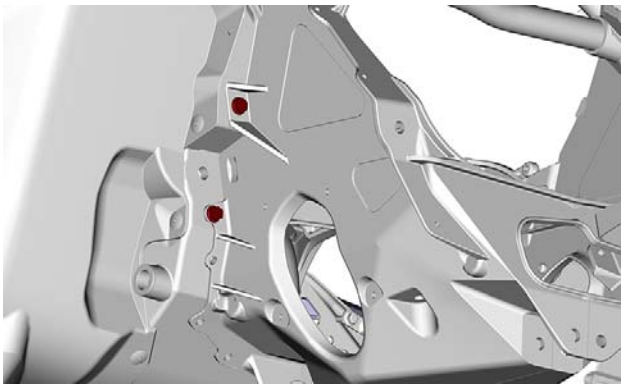
mmr2017-052-006
RH SIDE SHOWN

13. Remove the front suspension module.

Installing the Front Suspension Module

The installation is the reverse of the removal procedure. However, pay attention to the following.

Refer to exploded view for proper tightening torque.

Install fasteners as per the following sequence.

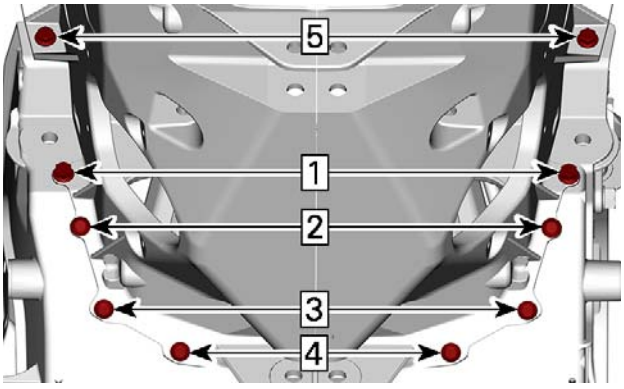

mmr2017-052-025_a

ENGINE MODULE

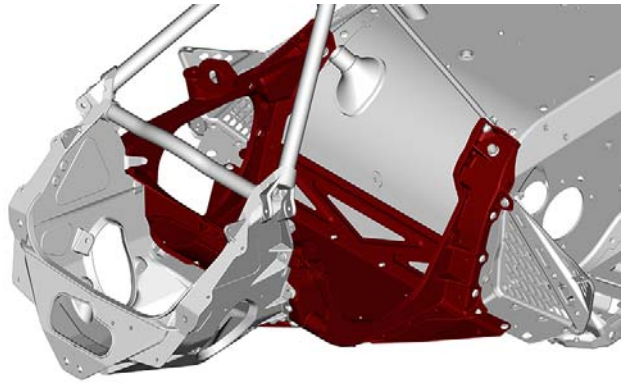
mmr2017-052-008

Removing the Engine Module

1. Remove the *FRONT SUSPENSION MODULE*, see procedure in this subsection.
2. Remove RH side bottom pan. Refer to *BODY* subsection.
3. Remove the RH side engine rubber mount. Refer to *ENGINE*.subsection.
4. Detach side frame members from engine module.

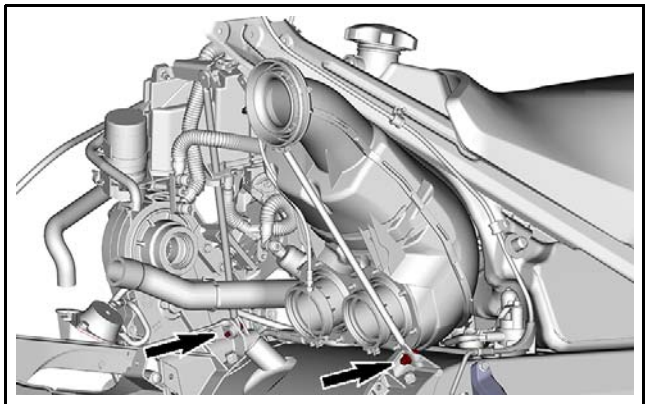
mmr2017-052-009_a

5. Remove toe hook fasteners, if equipped.

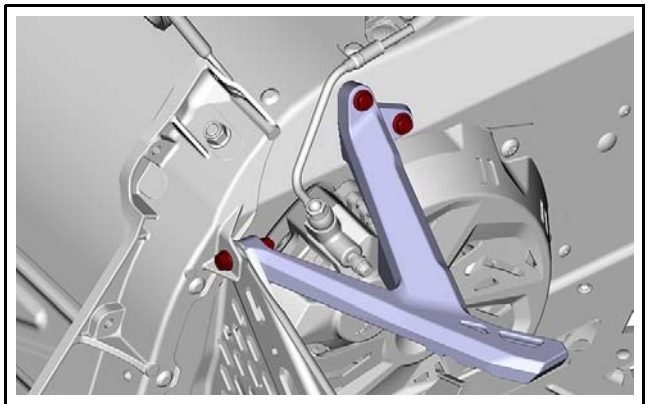
mmr2017-052-010

6. Remove the chaincase cover. Refer to *CHAINCASE* subsection.
7. Remove the screw that secure the chaincase to the engine module.

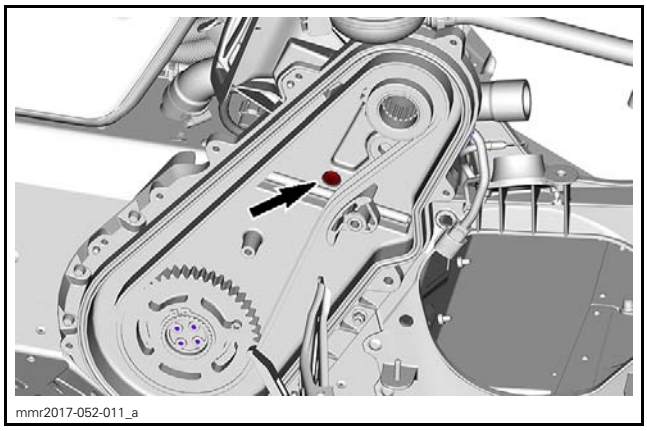
mmr2017-052-011_a

8. Remove the electrical ground screw located between the chaincase and the engine mount.

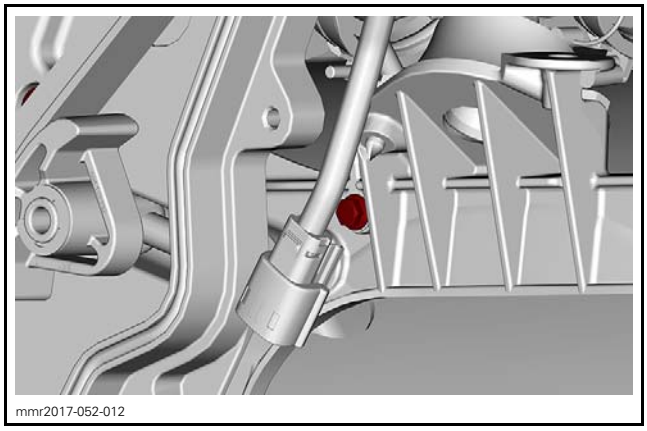
mmr2017-052-012

9. Remove rivets and bolts as per the following illustrations. Refer to *REMOVING A POP RIVET* in this subsection.

NOTICE **It is highly recommended to support the frame locally around a Hemlock rivet when punching its nail out.**

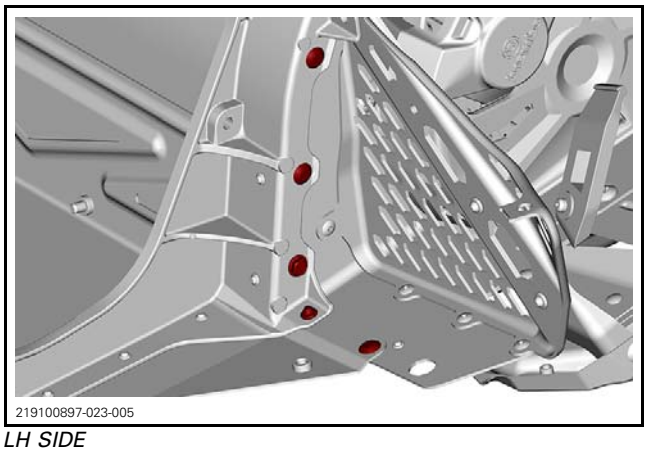
219100897-023-005

LH SIDE

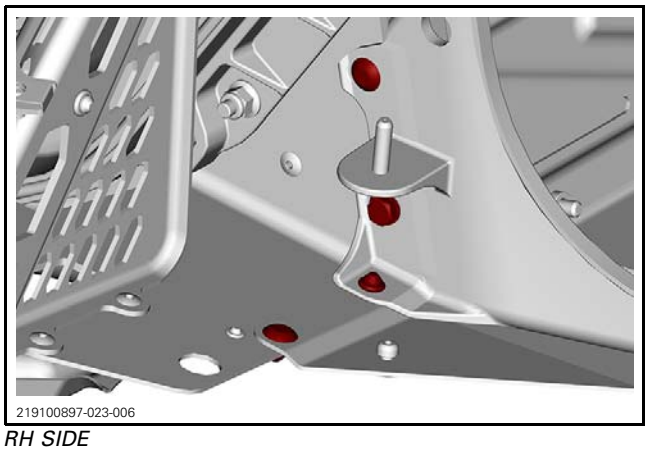

RH SIDE

10. Remove nuts and screws securing the engine module to the tunnel.

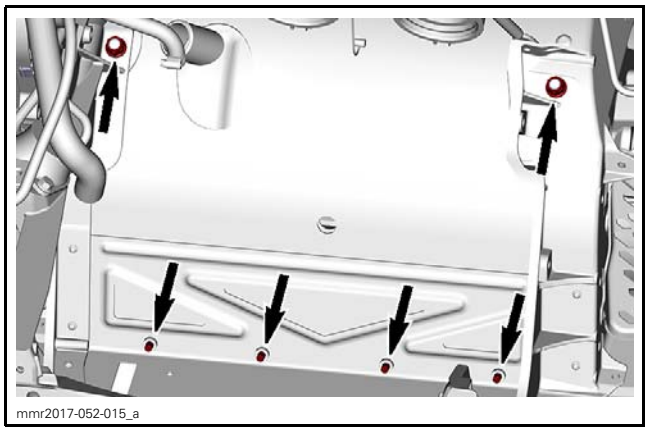

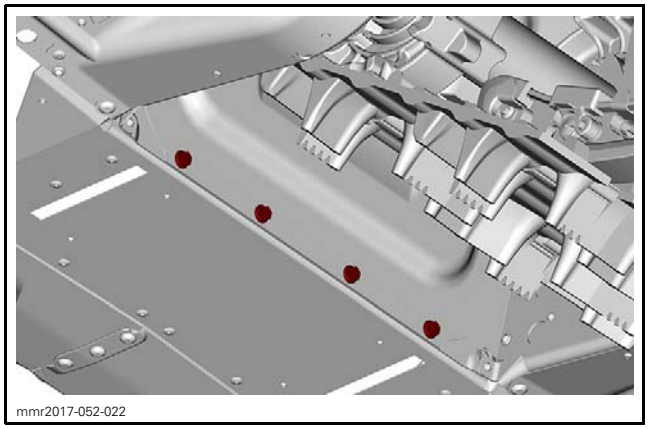

VIEW FROM INSIDE THE TUNNEL

11. Remove the engine module.

If only one of the two side members is replaced:

Models with Reinforcement Plate

Remove the rivets and bolts retaining the reinforcement plate.

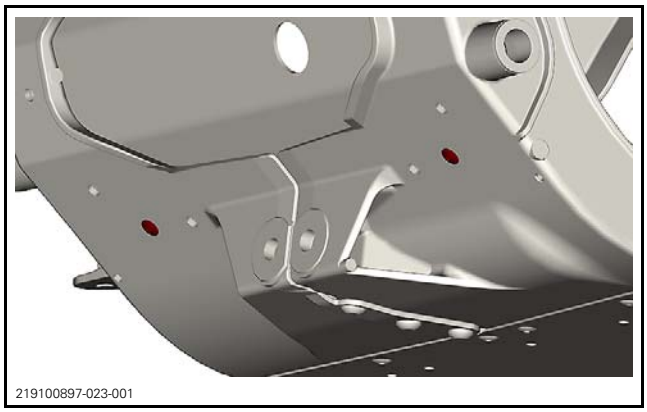

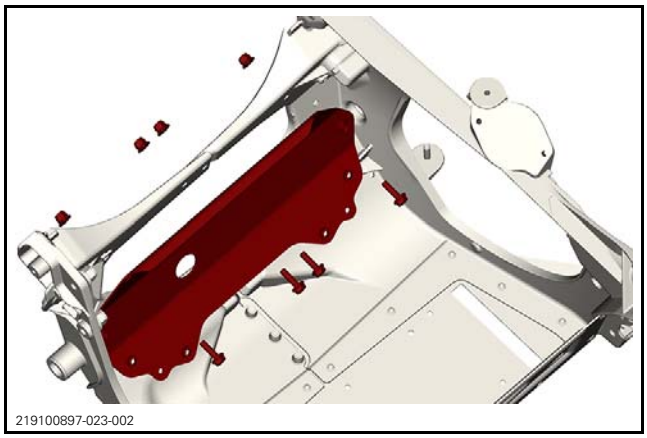

Remove HUCK rivets as per the procedure in this subsection.

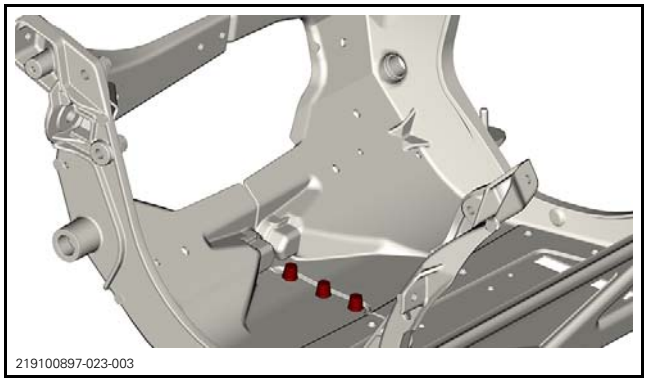

Models without Reinforcement Plate

Remove HUCK rivets and bolts as per the procedure in this subsection.

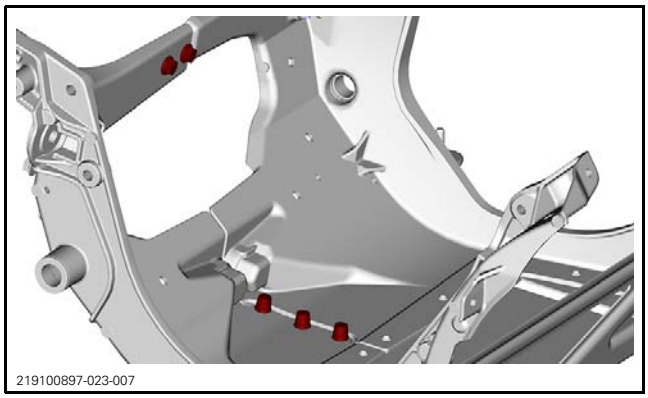
219100897-023-007

Engine Module Installation

The installation is the reverse of the removal procedure. However, pay attention to the following.

Assemble LH and RH side frame member before to fix on the tunnel module.

If the HUCK rivets were removed, replace with the following parts.

NEW FASTENERS	
Torx screw M6 x 20	(P/N 250000712)
Hexagonal flanged elastic stop nut M6	(P/N 233261414)

NOTE: Install the 3 bottom screws with heads downwards and the 2 upper screws with heads towards the engine.

Install all screws and rivets in there hole (including reinforcement fasteners) before tightening and riveting.

Refer to exploded view for proper tightening torque. Use standard tightening torque when not specified.

TUNNEL MODULE

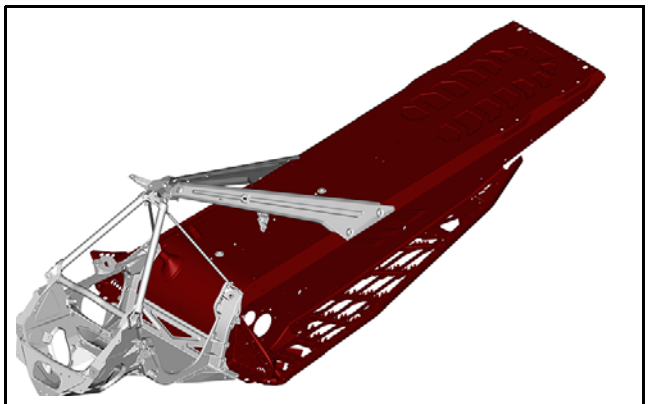
mmr2017-052-017

Removing the Tunnel Module

1. Drain cooling system, Refer to *COOLING SYSTEM DRAINING* in *PERIODIC MAINTENANCE PROCEDURES* subsection.
2. Place a wooden box under the engine module to support the frame.
3. Refer to the appropriate subsection and remove:
   - Driven pulley and countershaft
   - Fuel tank
   - Primary air intake silencer
   - LH bottom pan
   - Track
4. Remove the remaining drive belt guard bracket screw.

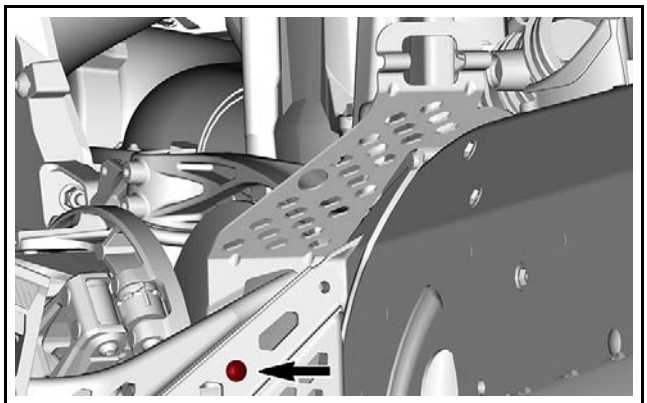
mmr2017-052-018_a

5. Disconnect the starter cable from the solenoid, if equipped.
6. Disconnect and remove the electric harness from the plastic bracket.

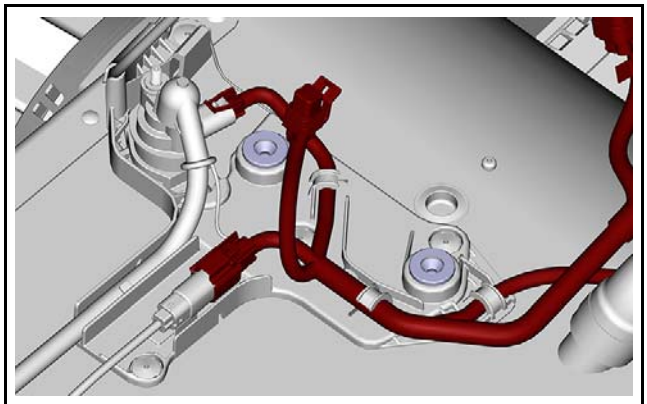
mmr2017-052-019

7. If the tunnel is replaced, remove:
   - Chaincase
   - The plastic bracket
   - Devices that retain the battery cable, if equipped

– Rear bumper
– Taillight
– Snowguard.

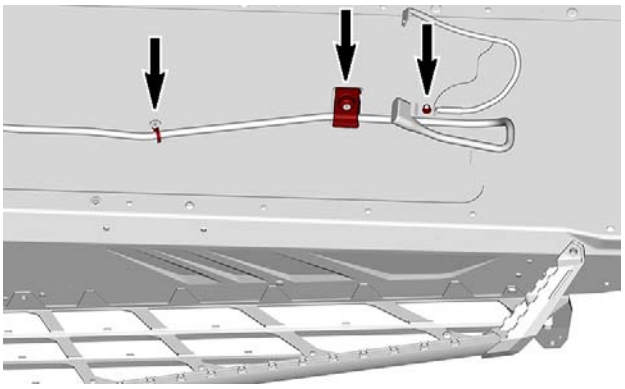
mmr2017-052-023_a

8. Move the plastic bracket, electrical harness, and fuel hoses aside to clear the tunnel.
9. Loosen the coolant hose clamps and disconnect hoses.

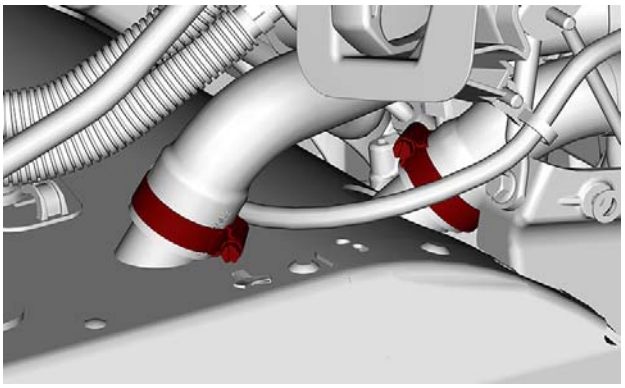
mmr2017-052-021

10. Remove rivets as per the following illustrations. Refer to *REMOVING A POP RIVET* in this subsection.

NOTICE **It is highly recommended to support the frame locally around a Hemlock rivet when punching its nail out.**

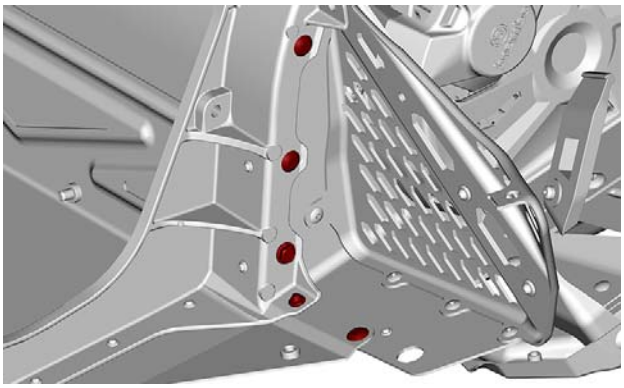
219100897-023-005

LH SIDE

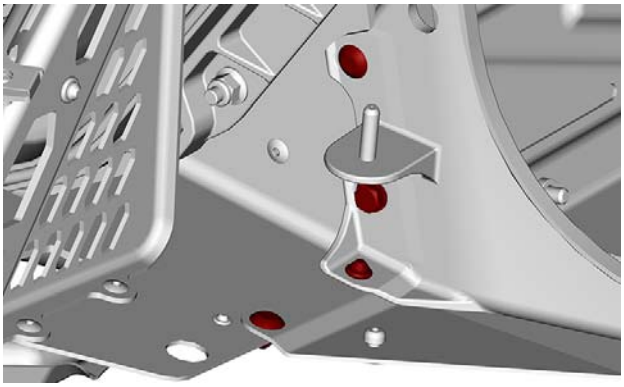
219100897-023-006

RH SIDE

11. Remove nuts and screws securing the engine module to the tunnel.

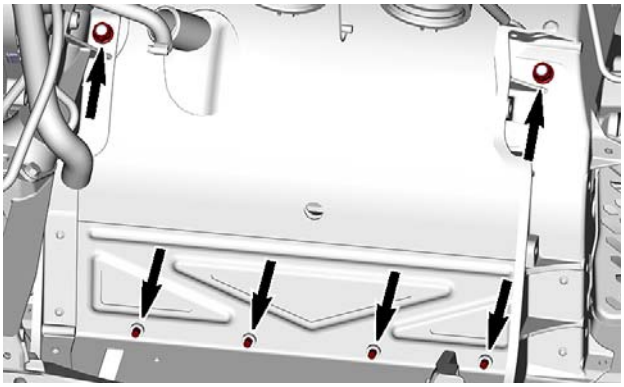
mmr2017-052-015_a

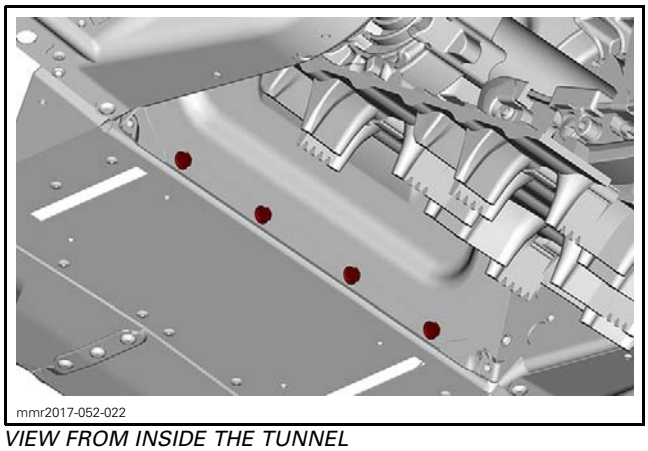

VIEW FROM INSIDE THE TUNNEL

12. Separate the tunnel module from the rest of the frame.
13. Remove the tunnel protectors under the tunnel, if equipped.

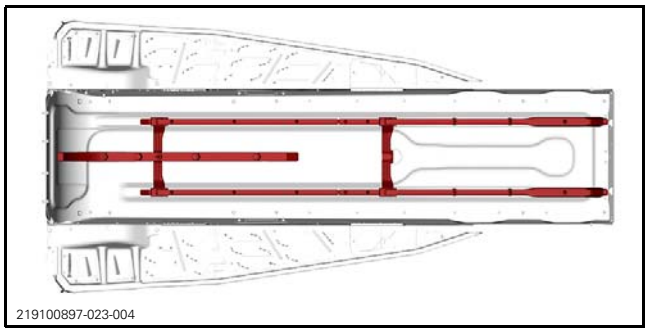

Installing the Tunnel Module

The installation is the reverse of the removal procedure. However, pay attention to the following.

Refer to exploded views or appropriate subsections for proper tightening torque.

Properly refill cooling system. Refer to *COOLING SYSTEM REFILL AND BLEEDING* in *PERIODIC MAINTENANCE PROCEDURES* subsection.

HEAT EXCHANGER

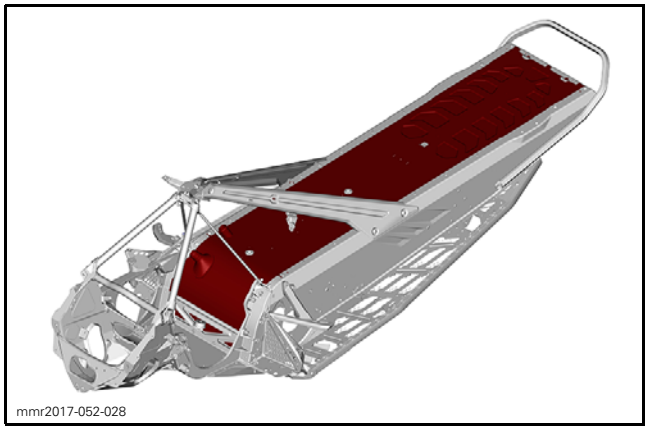

Replacing the Heat Exchanger

1. Remove the tunnel. Refer to the procedure in this subsection.

Do not remove the chaincase.

2. Remove the tunnel rear cap. Refer to *RIVETS* in this subsection.

NOTICE **It is highly recommended to support the frame locally around a Hemlock rivet when punching its nail out.**

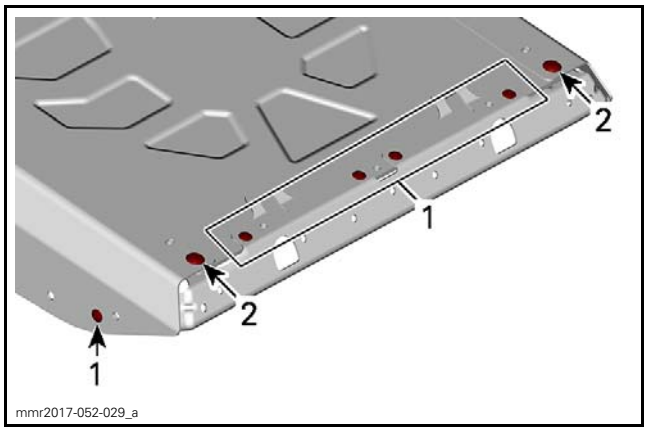

1. *Avibulb rivets (pop rivets)*
2. *Hemlock rivets (pop rivets)*

3. Remove the following rivets.

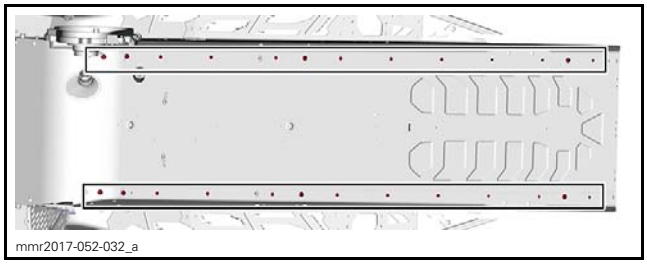

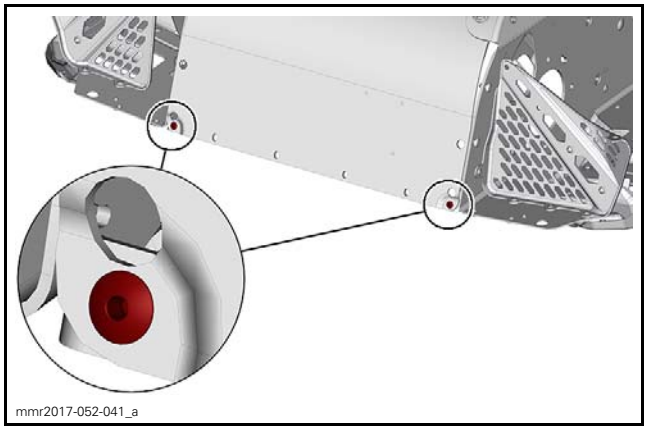

4. Position the new heat exchanger.
5. Install M6 screws and nuts loosely in the Hemlock rivet holes.

NOTE: M6 screws will not fit in self-piercing rivet holes.

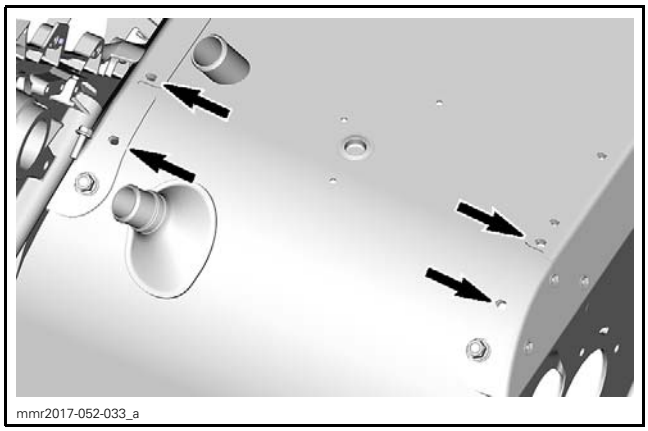

FRONT RIVET HOLES

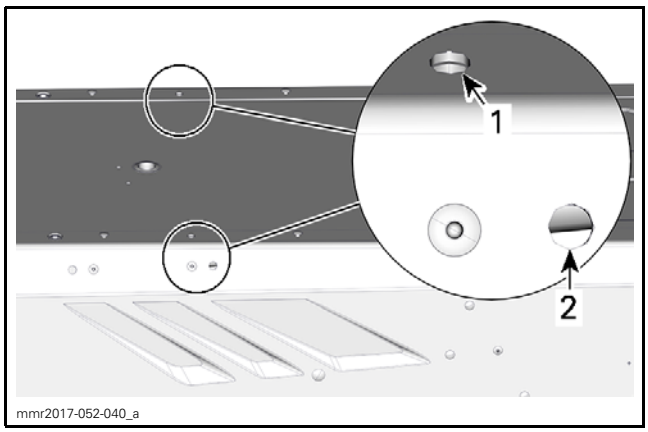

MID-LENTGH RIVET HOLES
1. *Install M6 screws and nuts here*
2. *Rear mounting hole for rear frame member*

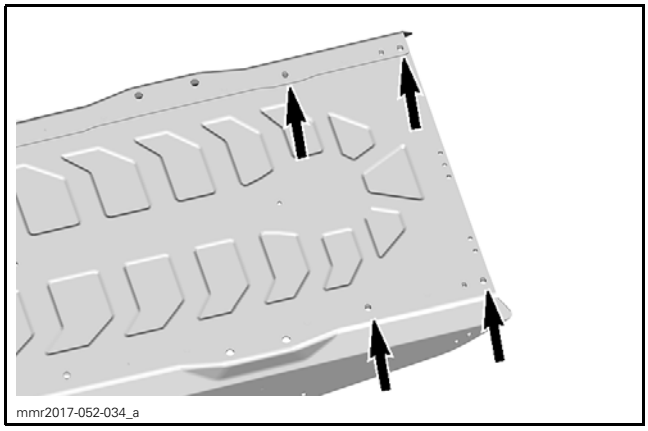

REAR RIVET HOLES

6. Install the gauge kit loosely with the appropriate screws, as per the following illustrations.

NOTICE It is imperative to use the gauge kit and to follow each steps of this procedure to avoid drive axle misalignment.

REQUIRED TOOL	
RADIATOR INSTALLATION GAUGES (P/N 529 036 422)	

CYLINDRICAL GAUGES LENGHT	
Rear suspension hole gauges	419.2 mm (16-1/2 in)
Tail gauge	426.4 mm (16-25/32 in)

The gauge kit fits all tunnel sizes.

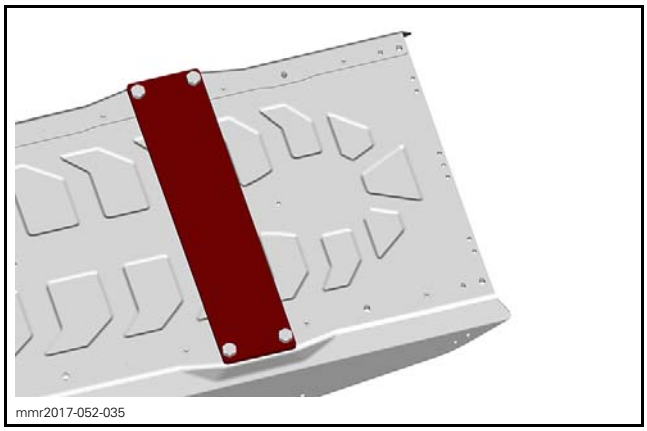

1 LINQ KIT FRAME

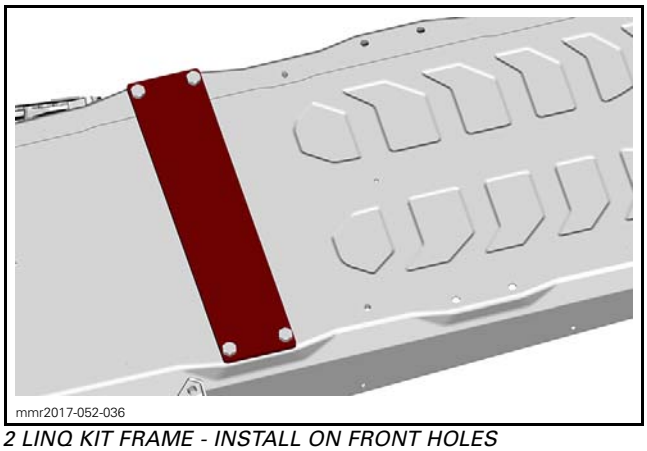

2 LINQ KIT FRAME - INSTALL ON FRONT HOLES

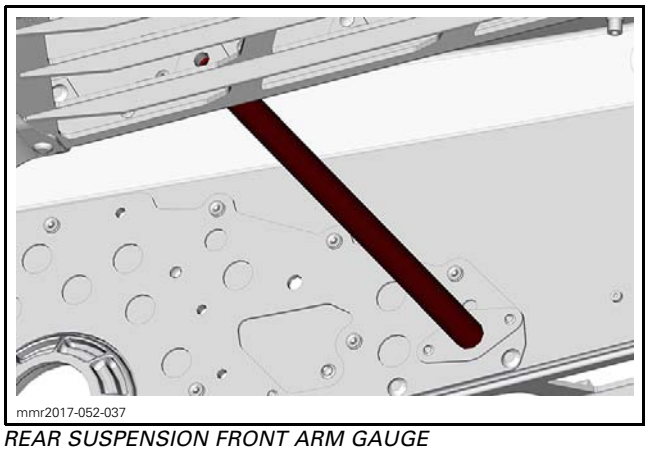

REAR SUSPENSION FRONT ARM GAUGE

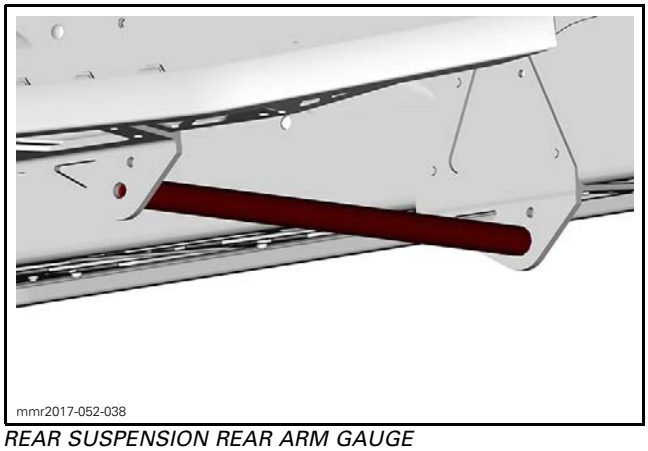

REAR SUSPENSION REAR ARM GAUGE

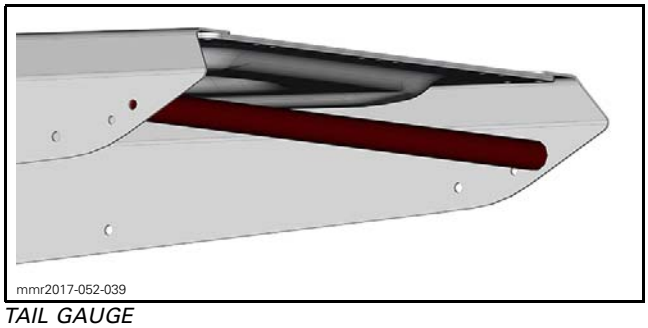

TAIL GAUGE

7. Install the drive axle. Refer to *DRIVE AXLE* subsection.

NOTE: It is not required to install the chain and the brake disc.

8. Tighten gauges and M6 screws with standard torque.
9. Enlarge self-piercing rivet holes.

REQUIRED TOOL
Drill bit6.35 mm (1/4 in)

10. Install Hemlock rivets in enlarged holes.

REQUIRED PARTS	
Hemlock rivets	293150119

11. Install the tunnel rear cap.

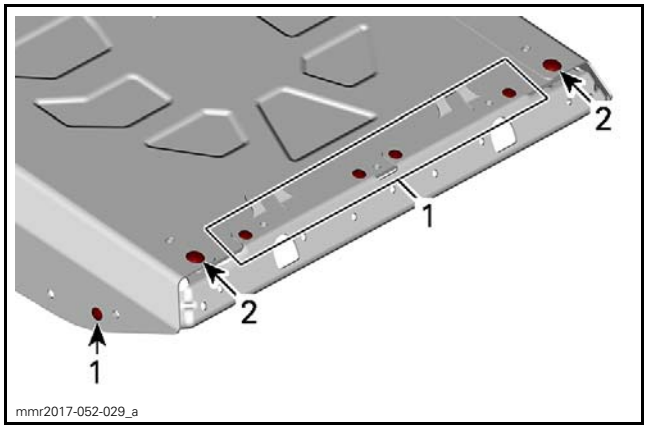

1. *Avibulb 4.76 mm (3/16 in) rivets*
2. *Hemlock 6.4 mm (1/4 in) rivets*

12. Remove the M6 screws and nuts, and install Hemlocks rivets.
13. Remove all gauges and the drive axle.
14. Reassemble the vehicle.

COUNTERSHAFT BEARING SUPPORT

Removing the Countershaft Bearing Support

1. Refer to the appropriate subsection and remove:
   - Driven pulley and countershaft
   - LH side bottom pan.
2. Disconnect the Rave valve cable. Refer to *RAVE* subsection in *ENGINE*.
3. Install a shim between the engine bottom end and the engine module.
4. Remove both engine mount screws.

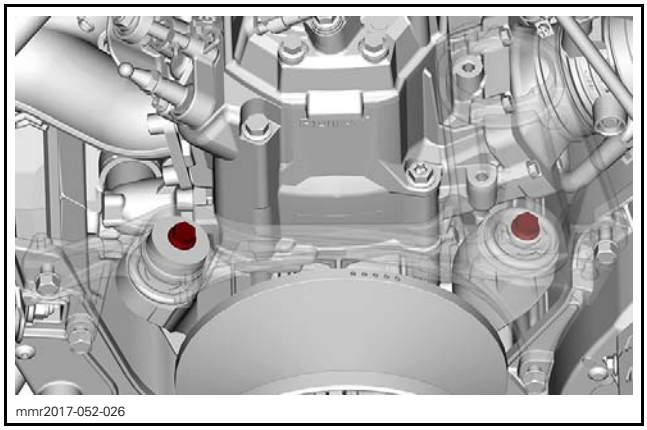

FRAME MEMBER IS TRANSPARENT FOR CLARITY

5. Remove countershaft bearing support screws.

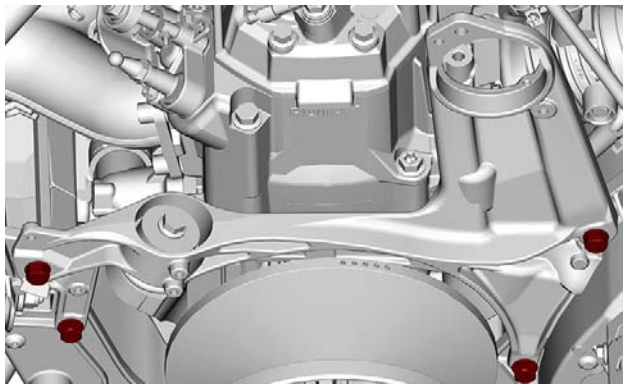

mmr2017-052-027

6. Remove the countershaft bearing support.

Installing the Countershaft Bearing Support

The installation is the reverse of the removal procedure. However, pay attention to the following.

IF INSTALLED ON THE SAME FRAME MEMBER	
M8 Hexagonal flange screw (all fasteners)	207683044
IF INSTALLED ON A NEW FRAME MEMBER	
M8 Hexagonal flange self-tapping screw (at rear of bearing support)	210283040

Refer to exploded view for tightening torque and sequence.

VEHICLES (600R E-TEC AND 850 E-TEC)

COOLING SYSTEM			
Coolant	Type	Recommended	XPS EXTENDED LIFE PRE-MIXED COOLANT
		Alternative, or if not available	Ethyl glycol and distilled water (50%/50%) or coolant specifically formulated for aluminum engines.
	Quantity	MXZ	6.2 L (6.6 qt (U.S. liq.))
		Grand Touring Renegade	6.5 L (6.9 qt (U.S. liq.))
		Backcountry 146" Freeride 146" Summit 146"	7.2 L (7.6 qt (U.S. liq.))
		Backcountry 154" Freeride 154" Summit 154"	7.4 L (7.8 qt (U.S. liq.))
		Freeride 165" Summit 165"	7.6 L (8 qt (U.S. liq.))
		Summit 175"	7.8 L (8.2 qt (U.S. liq.))
		Expedition LE / SE / SWT / Xtreme Skandic	8.6 L (9.1 qt (U.S. liq.))
Radiator cap opening pressure			110 kPa (16 PSI)

LUBRICATION SYSTEM		
Oil injection pump type		Electronic oil injection pump
Injection oil	Type	XPS 2T E-TEC synthetic oil
	Quantity	3.4 L (3.6 qt (U.S. liq.))

FUEL SYSTEM			
Fuel pump			In-tank electrical
Fuel	Type		Premium unleaded gasoline (fuel which may contain up to 10% MAX ethanol
	Octane rating	Inside North America	91 Pump Posted AKI (R+M)/2)
		Outside North America	95 (RON)
Fuel tank capacity	All models except Expedition and Skandic		36 L (9.5 U.S. gal.)
	Expedition Skandic		42 L (11.1 U.S. gal.)

ELECTRICAL SYSTEM			
Battery		Expedition LE / SE / SWT	12 V, 30 A•h
		Other models	12 V, 18 A•h
Headlamp			2 x 60/55 W (H-13)
Taillight and stoplight		Single	0.14 / 2.6 W LED
		Double	2 x 2.6 / 3.5 W LED
Fuses	All models except Expedition and Skandic	F1: Start / RER / Clock	5 A
		F2: Loads	25 A
		F3: Battery	30 A
		F4: Accessories	7.5 A
	Expedition Skandic	FA: Battery	40 A
		F1: Start / RER	5 A
		F2: Headlamps	20 A
		F3: Cluster	15 A
		F4: RFID / Starter	10 A
		F5: Accessories	15 A
		F6: Fan	15 A
		F7: ACS	15 A
		F8: Taillights / PAC	15 A

DRIVE SYSTEM - CHAINCASE			
Chaincase oil (if equipped)	Type	Recommended	XPS Synthetic chaincase oil
		Alternative, or if not available	75W140 gear oil that meets the API GL-5 specification
	Quantity		350 ml (12 U.S. oz)

DRIVE SYSTEM - CHAINCASE		
Chain drive ratio	MXZ (600R) (1.5" track profile)	21/43
	All Backcountry / X / X-RS (1.6" track profile) Renegade X (1.50" track profile)	21/45
	Backcountry (600R) Backcountry X / X-RS (2.0" track profile)	23/51
	Expedition LE / SE MXZ (600R)(1.25" track profile) All Renegade (600R) except Renegade X (1.50" track profile) Renegade X-RS (1.50" track profile) Grand Touring LTD Skandic WT	23/45
	Expedition SWT Skandic SWT	23/49
	MXZ X (850) except (1.25" track profile) MXZ X-RS (850) except (1.25" track profile) All Renegade (850) except Renegade X-RS (1.50" track profile)	25/45
	MXZ TNT (850) / X / X-RS (1.25" track profile)	27/45
	Expedition Xtreme	27/49
	Freeride 146" Summit 146" Summit X with Expert Package	21/49
	Summit SP 154" Freeride 154"	21/51
	Freeride 165" Summit SP 165" / 175"	21/53

DRIVE SYSTEM - CHAINCASE			
Chain	Pitch		9.530 mm (.375 in)
	Type		Silent
	Links qty	Expedition LE / SE Skandic WT	96
		Expedition SWT / Xtreme Skandic SWT	100
		Renegade X (600R) (1.5" track profile)	106
		MXZ X / X-RS / TNT (600R) (1.25" track profile) MXZ X (850) (1.5" track profile) MXZ X-RS (850) Renegade Adrenaline / X / Enduro (600R) (1.25" track profile) Renegade Adrenaline / X / X-RS / Enduro (850) Grand Touring LTD	108
		MXZ X / TNT (850) (1.25" track profile)	110
		Backcountry / X / X-RS (850) (1.6" track profile) MXZ X / X-RS (600R) (1.5" track profile)	112
		Freeride 146" Summit SP 146"	114
		Backcountry (600R) Backcountry X / X-RS (2" track profile) Backcountry X-RS (2.5" track profile) Summit 154" / 165" / 175" Freeride 154" / 165" Summit SP (600R) (2.5" track profile) Summit SP (600R) (3.0" track profile)	116

DRIVE SYSTEM - GEARBOX			
Gearbox oil	Type	Recommended	XPS Synchromesh Transmission Synthetic Oil
		Alternative, or if not available	75W140 gear oil that meets the API GL-5 specification
	Capacity		900 ml (30.4 U.S. oz)

DRIVE SYSTEM - GEARBOX			
Gearbox ratio	600R	Low	3.87:1
		High	2.15:1
	850	Low	3.59:1
		High	2.0:1

DRIVE SYSTEM - DRIVE AND DRIVEN PULLEYS			
Drive pulley	Type		pDrive
Drive pulley calibration	Clutch engagement (RPM)	All models equipped with a 600R E-TEC	3400 ± 100 RPM
		Renegade Adrenaline 850 Renegade Enduro 850 Renegade X 850 Renegade X-RS	2900 ± 100 RPM
		Summit 175" (High Altitude Calibration)	3900 ± 100 RPM
		MXZ TNT 850 E-TEC MXZ X 850 MXZ X-RS 850	3200 ± 100 RPM
		Backcountry 850 Backcountry X Backcountry X-RS Summit X with Expert Package (Sea level calibration)	3300 ± 100 RPM
		Summit X with Expert Package (High altitude calibration)	3600 ± 100 RPM
		All others	3800 ± 100 RPM

DRIVE SYSTEM - DRIVE AND DRIVEN PULLEYS			
Drive pulley calibration	Spring color code	MXZ Renegade series (600R)	Blue/Blue
		Renegade series (850) Expedition LE / SE / SWT Grand Touring LTD Skandic WT / SWT	Yellow/Blue
		Backcountry (600R) Freeride (High Altitude Calibration) Summit 146" / 154" / 165" (High Altitude Calibration)	Blue/Violet
		Backcountry (850) Backcountry X / X-RS Expedition Xtreme Freeride (Sea Level Calibration) Summit 146" / 154" / 165" / 175" (Sea Level Calibration)	Blue/Yellow
		Summit 175" (High Altitude Calibration)	Violet/White
	Spring length	Blue/Blue	99.8 mm (3.929 in)
		Violet/White	98.5 mm (3.878 in)
		Blue/Yellow	115.1 mm (4.531 in)
		Blue/Violet	100.3 mm (3.949 in)
		Yellow/Blue	90.7 mm (3.571 in)

DRIVE SYSTEM - DRIVE AND DRIVEN PULLEYS			
Drive pulley calibration	Screw length		14 mm (.551 in)
	Ramp	Grand Touring LTD	901
		Expedition LE / SE / SWT Skandic WT / SWT	971
		Expedition Xtreme	982
		Backcountry (600R) Summit (600R) (EUR)	951
		All MXZ All Renegade	968
		Backcountry (850) Backcountry X / X-RS	990
		Freeride (High Altitude Calibration)	965
		Freeride (Sea Level Calibration)	990
		Summit (High Altitude Calibration)	965
		Summit (Sea Level Calibration)	990
Drive pulley calibration	Clicker position	Backcountry / X / X-RS Summit Freeride (Sea Level Calibration)	4
		All other models	3

DRIVE SYSTEM - DRIVE AND DRIVEN PULLEYS			
Driven pulley type	Type		QRS
	Spring color code	Grand Touring LTD MXZ Renegade	Green/Green
		Backcountry / X / X-RS Expedition Freeride (Sea level calibration) Summit (Sea level calibration) Skandic WT / SWT	Black
		Freeride (High altitude calibration) Summit (High altitude calibration)	Blue/Blue
	Spring length	Blue/Blue	124.3 mm (4.894 in)
		Green/Green	98.5 mm (3.878 in)
		Black	88.8 mm (3.496 in)
	Spring preload		0
	Cam angle	MXZ (850)	45°/42°
		MXZ (600R) Renegade (600R) Grand Touring LTD	44°
		Renegade (850)	44°/42°
		Backcountry (850) Backcountry X / X-RS Freeride 146" Summit 146" (850)	42°/38° - XTI
		Expedition Xtreme	42°/40° - XTI
		Backcountry (600R) Summit (600R)	46°/42° - XTI
		Freeride 154" / 165" Summit 154" (850) Summit 165" / 175" Expedition LE / SE / SWT Skandic WT / SWT	40° - XTIs
Pulley distance	Z		Not adjustable 20.9 mm (.823 in)
	X		Not adjustable 41.1 mm ± 1.8 mm (1.618 in ± .071 in)
Offset	Y - X	New	Not adjustable 3 mm (.118 in)
		After break-in	Not adjustable 2 mm ± .5 mm (.079 in ± .02 in)

DRIVE SYSTEM - DRIVE AND DRIVEN PULLEYS			
Drive belt	Width		38.3 mm (1.508 in)
	Wear limit		35.9 mm (1.413 in)
Drive sprocket number of teeth		Freeride 154" Freeride 165" Summit 154" Summit 165" Summit 175"	6
		All others models	8

DRIVE SYSTEM - TRACK			
Track	Width	All MXZ, Renegade and Backcountry (1.6" track Profile) Grand Touring LTD	381 mm (15 in)
		Backcountry (2.0" track profile) Freeride Summit	406 mm (16 in)
		Expedition LE / SE / SWT / Xtreme Skandic WT	500 mm (20 in)
		Expedition SWT Skandic SWT	600 mm (24 in)
	Length	All MXZ	326.9 cm (129 in)
		All Expedition All Skandic	392.3 cm (154 in)
		All Renegade Grand Touring LTD	348.7 cm (137 in)
		All Backcountry excluding X-RS	370.5 cm (146 in)
		Backcountry X-RS	370.8 cm (146 in) OR 391.2 cm (154 in)
		Summit	370.5 cm (146 in)
			392 cm (154 in)
			419 cm (165 in)
			444.5 cm (175 in)
		Freeride	348.7 cm (137 in)
			370.5 cm (146 in)
			392 cm (154 in)
			419 cm (165 in)

DRIVE SYSTEM - TRACK			
Track	Profile height	All MXZ All Renegade	31.8 mm (1.25 in) OR 38 mm (1.5 in)
		Backcountry Backcountry X Backcountry X-RS	40.6 mm (1.6 in) OR 50 mm (2 in) OR 63.5 mm (2.5 in)
		Grand Touring	31.8 mm (1.25 in)
		Expedition LE / SWT Skandic WT / SWT	38.1 mm (1.5 in)
		Expedition SE	38.1 mm (1.5 in) or 45.7 mm (1.8 in)
		Expedition Xtreme	45.7 mm (1.8 in)
		Freeride	63.5 mm (2.5 in) OR 76.2 mm (3 in)
		Summit	63.5 mm (2.5 in) OR 76.2 mm (3 in)
Track adjustment	Deflection	Expedition Skandic	4 cm to 5 cm (1.57 in to 1.97 in)
		All other models	3.2 cm (1.26 in)
	Force	Expedition Skandic	7.3 kgf (16 lbf)
		All other models	6.0 kgf to 8.5 kgf (13 lbf to 19 lbf)

BRAKE SYSTEM			
Brake	Type		Single 200 mm cross drilled carbon steel disc
Brake fluid	Type		DOT 4
	Quantity		65 ml (2.2 U.S. oz)
Caliper			Fixed twin pistons (2 x 40mm)
Brake pad material		Backcountry Expedition MXZ TNT Renegade Adrenaline Renegade Enduro Skandic	Organic
		Backcountry X / X-RS Freeride MXZ X / X-RS Renegade X / X-RS Summit	Ferrit
Minimum brake pad thickness (includes backing plate)			5 mm (.2 in)
Brake lining minimum thickness			1 mm (.039 in)
Minimum brake disc thickness			4.5 mm (.177 in)
Maximum brake disc warpage			0.25 mm (.01 in)

FRONT SUSPENSION		
Suspension type	Skandic	LTS
	All other models	RAS 3
Suspension maximum travel	MXZ X Renegade X	233 mm (9.2 in)
	MXZ TNT Renegade Adrenaline Backcountry Backcountry X Backcountry X-RS Renegade Enduro Grand Touring LTD Freeride 146"	220 mm (8.7 in)
	Expedition LE / SE / SWT / Xtreme	210 mm (8.3 in)
	Freeride 154" Freeride 165" All Summit	215 mm (8.5 in)
	MXZ X-RS Renegade X-RS MXZ 600R	255 mm (10 in)
	Skandic	150 mm (5.9 in)
Shock absorber type	MXZ X-RS Renegade X-RS Backcountry X-RS All Freeride	KYB PRO 36 R EA
	Expedition SE Grand Touring Summit SP	HPG
	MXZ (except X-RS) Renegade (except X-RS) Backcountry (except X-RS) Summit X Expedition Xtreme	HPG Plus
	Summit Expert	HPG Plus Kashima coated
	Expedition LE / SWT Skandic	Motion Control
Stabilizer bar type		Link

REAR SUSPENSION		
Suspension type	All Expedition All Skandic	SC-5U
	All MXZ All Renegade Grand Touring LTD	rMotion
	All Backcountry	cMotion
	All Summit All Freeride	tMotion

REAR SUSPENSION			
Suspension maximum travel Measured at rear arm		MXZ	272 mm (10.7 in)
		Renegade Grand Touring LTD	270 mm (10.6 in)
		Backcountry All Summit (except 175") All Freeride All Expedition All Skandic	239 mm (9.4 in)
		Summit 175"	242 mm (9.5 in)
Shock absorber type	Center	MXZ TNT MXZ X Renegade X Backcountry X Summit X Expedition Xtreme	HPG Plus
		Expedition SE Renegade Adrenaline Renegade Enduro Backcountry Grand Touring LTD Summit SP	HPG
		MXZ X-RS Renegade X-RS Backcountry X-RS All Freeride	KYB PRO 40 EA
		Expedition LE / SWT All Skandic	Motion control
	Rear	MXZ TNT Summit X	HPG Plus
		MXZ X Renegade X Renegade Backcountry X Expedition Xtreme Summit X with Expert Package	KYB PRO 36 EA
		Renegade Adrenaline Renegade Backcountry Summit SP Expedition LE / SWT All Skandic	HPG
		MXZ X-RS Renegade X-RS Backcountry X-RS All Freeride	KYB PRO 40 EA
		Renegade Enduro Expedition SE Grand Touring LTD	ACS (Air Controlled Suspension)

REAR SUSPENSION		
Stroke limiter standard position	Backcountry / X / X-RS Freeride Summit (except 175")	3
	Summit 175"	2
	MXZ Renegade	1

STEERING SYSTEM		
Handlebar	Grand Touring LTD	Aluminum U-shaped
	All Except Grand Touring	Aluminum U-shaped with J-Hooks
Riser block height	MXZ TNT Renegade Adrenaline Renegade Enduro Backcountry / X / X-RS Summit Expert	120 mm (4.7 in)
	Expedition SE MXZ X / X-RS Renegade X / X-RS Grand Touring LTD	Adjustable - 120 mm (4.7 in)
	Expedition LE / SWT / Xtreme All Skandic	145 mm (5.7 in)
	All Freeride All Summit (except Expert)	165 mm (6.5 in)
Ski type	MXZ TNT Renegade Adrenaline	Pilot 5.7
	Grand Touring LTD	Pilot 5.7 SL
	Renegade Enduro	Pilot TS
	MXZ X MXZ X-RS Renegade X Renegade X-RS	Pilot 5.7 Pilot TX (optional)
	All Backcountry Expedition Xtreme	Pilot DS2
	All Freeride All Summit	Pilot DS3
	Expedition LE / SE / SWT All Skandic	Pilot 7.4
Ski alignment		5 mm (.197 in) (toe-out)

WEIGHT AND DIMENSIONS			
Mass (dry)	600R	MXZ TNT	212 kg (467 lb)
		MXZ X (with Quick Adjust Suspension and ski Pilot TX)	223 kg (492 lb)
		MXZ X (without Quick Adjust Suspension and ski Pilot TX)	216 kg (476 lb)
		MXZ X-RS (without Quick Adjust Suspension and ski Pilot TX)	221 kg (487 lb)
		MXZ X-RS (with Quick Adjust Suspension and ski Pilot TX)	228 kg (503 lb)
		MXZ X-RS (with Quick Adjust Suspension and ski Pilot 5.7)	224 kg (494 lb)
		Backcountry	214 kg (471 lb)
		Renegade X (without Quick Adjust Suspension and ski Pilot TX)	216 kg (475 lb)
		Renegade X (with Quick Adjust Suspension and ski Pilot TX)	225 kg (496 lb)
		Renegade Enduro	231 kg (508 lb)
		Summit SP 146"	213 kg (470 lb)
		Summit SP 154" (electric start)	210 kg (463 lb)
		Summit SP 154" (SHOT and manual start)	202 kg (445 lb)
		Renegade Adrenaline	217 kg (478 lb)
		Grand Touring LTD	252 kg (554 lb)
		Expedition LE	280 kg (616 lb)
		Expedition SE / SWT	290 kg (639.3 lb)
		Skandic WT	275 kg (606.3 lb)
		Skandic SWT	287 kg (632.7 lb)

WEIGHT AND DIMENSIONS			
Mass (dry)	850	Expedition Xtreme	271 kg (595 lb)
		MXZ TNT	215 kg (474 lb)
		MXZ X (with Quick Adjust Suspension and ski Pilot TX)	226 kg (498 lb)
		MXZ X (without Quick Adjust Suspension and ski Pilot TX)	219 kg (483 lb)
		MXZ X-RS (without Quick Adjust Suspension and ski Pilot TX)	225 kg (496 lb)
		MXZ X-RS (with Quick Adjust Suspension and ski Pilot TX)	232 kg (511 lb)
		MXZ X-RS (with Quick Adjust Suspension and ski Pilot 5.7)	227 kg (500 lb)
		Renegade Adrenaline	221 kg (487 lb)
		Renegade Enduro	234 kg (516 lb)
		Renegade X (without Quick Adjust Suspension and ski Pilot TX)	221 kg (487 lb)
		Renegade X (with Quick Adjust Suspension and ski Pilot TX)	228 kg (503 lb)

WEIGHT AND DIMENSIONS			
Mass (dry)	850	Renegade X-RS (without Quick Adjust Suspension and ski Pilot TX)	227 kg (500 lb)
		Renegade X-RS (with Quick Adjust Suspension and ski Pilot TX)	234 kg (516 lb)
		Renegade X-RS (with Quick Adjust Suspension and ski Pilot 5.7)	237 kg (522 lb)
		Backcountry	217 kg (478 lb)
		Backcountry X (electric starter)	218 kg (481 lb)
		Backcountry X (SHOT starter)	210 kg (463 lb)
		Backcountry X-RS (electric starter) 146"	224 kg (494 lb)
		Backcountry X-RS (SHOT starter) 146"	216 kg (476 lb)
		Backcountry X-RS (electric starter) 154"	230 kg (507 lb)
		Backcountry X-RS (SHOT starter) 154"	221 kg (487 lb)
		Freeride 146" (SHOT and manual start)	214 kg (472 lb)
		Freeride 146" (electric starter)	222 kg (489 lb)
		Freeride 154" (SHOT and manual start)	209 kg (460.8 lb)
		Freeride 154" (electric starter)	218 kg (481 lb)
		Freeride 165" (SHOT and manual start)	212 kg (467 lb)
		Freeride 165" (electric starter)	221 kg (487 lb)
		Summit SP 146" (SHOT and manual start)	207 kg (456 lb)
		Summit SP 146" (electric starter)	216 kg (476 lb)

WEIGHT AND DIMENSIONS			
Mass (dry)	850	Summit SP 154" (SHOT and manual start)	205 kg (452 lb)
		Summit SP 154" (electric starter)	213 kg (470 lb)
		Summit SP 165" (SHOT and manual start)	209 kg (461 lb)
		Summit SP 165" (electric starter)	218 kg (481 lb)
		Summit SP 175" (SHOT starter)	210 kg (463 lb)
		Summit SP 175" (electric starter)	223 kg (492 lb)
		Summit X 154" (SHOT and manual start)	205 kg (452 lb)
		Summit X 154" (electric starter)	213 kg (470 lb)
		Summit X 165" (SHOT and manual start)	207 kg (456 lb)
		Summit X 165" (electric starter)	216 kg (476 lb)
		Summit X 175" (SHOT and manual start)	210 kg (463 lb)
		Summit X 175" (electric starter)	218 kg (481 lb)
		Summit X with Expert Package 154"	200 kg (440 lb)
		Summit X with Expert Package 165"	203 kg (448 lb)
Overall length		All MXZ	292.5 cm (115 in)
		All Renegade Grand Touring LTD	303.8 cm (119.6 in)
		Backcountry 146" Freeride 146" Summit 146"	311.0 cm (122.4 in)
		Backcountry X-RS (154 in) Freeride 154" Summit 154"	331.2 cm (130.4 in)
		Freeride 165" Summit 165"	344.5 cm (135.6 in)
		Summit 175"	350.3 cm (137.9 in)
		All Expedition	325.6 cm (128.2 in)
		All Skandic	322.2 cm (126.9 in)

WEIGHT AND DIMENSIONS		
Overall width	All MXZ All Renegade Grand Touring LTD	121.7 cm (47.9 in)
	All Backcountry Expedition Xtreme	114 cm (44.9 in) to 118 cm (46.5 in)
	All Freeride All Summit	108 cm to 111 cm (42.5 in to 43.7 in)
	Expedition LE / SE / SWT	120 cm (47.2 in) to 124 cm (48.8 in)
	All Skandic	108.9 cm to 111 cm (42.9 in to 43.7 in)
Overall Height	MXZ TNT MXZ X Renegade Adrenaline Renegade X	126.7 cm (49.9 in)
	Renegade Enduro	133.1 cm (52.4 in)
	MXZ X-RS Renegade X-RS	122.2 cm (48.1 in)
	Backcountry X-RS	122.9 cm (48.4 in)
	Grand Touring LTD	140.5 cm (55.3 in)
	Backcountry / X	127.4 cm (50.2 in)
	All Freeride	136.8 cm (53.9 in)
	Summit SP Summit X	138.6 cm (54.6 in)
	Summit X with Expert Package	129.2 cm (50.9 in)
	Expedition Xtreme	128 cm (50.4 in)
	Expedition LE / SE / SWT All Skandic	151.3 cm (59.6 in)
Ski stance	All MXZ All Renegade Grand Touring LTD	107.7 cm (42.4 in)
	All Backcountry All Expedition	97.5 cm (38.4 in) to 102 cm (40.2 in)
	All Freeride All Summit	91 cm to 95.5 cm (35.8 in to 37.6 in)
	All Skandic	88.9 cm (35 in)

MATERIAL	
Frame	Aluminum
Side bottom pan, Front bottom pan, gauge support, gauge support cover, side panel, rear console, windshield support, glove box cover and headlamp surrounding	Polypropylene
Rear lateral hood, front hood and top side panel	Surlyn

VEHICLES (850 E-TEC TURBO)

COOLING SYSTEM		
Coolant	Type	Ethyl glycol and distilled water (50%/50%) Use BRP EXTENDED LIFE PRE-MIXED COOLANT or coolant specifically formulated for aluminum engines.
	Quantity	7.8 L (8.2 qt (U.S. liq.))
Radiator cap opening pressure		110 kPa (16 PSI)

LUBRICATION SYSTEM		
Oil injection pump type		Electronic oil injection pump
Injection oil	Type	2T E-TEC synthetic oil
	Quantity	3.4 L (3.6 qt (U.S. liq.))

FUEL SYSTEM			
Fuel pump			In-tank electrical
Fuel	Type		Premium unleaded gasoline (fuel which may contain up to 10% MAX ethanol
	Octane rating	Inside North America	91 Pump Posted AKI (R+M)/2)
		Outside North America	95 (RON)
Fuel tank capacity			36 L (9.5 U.S. gal.)

ELECTRICAL SYSTEM		
Battery		12 V, 18 A•h
Headlamp		2 x 60/55 W (H-13)
Taillight and stoplight		2.6 W / 139m W LED
Fuses	Start/RER/Clock (F1)	5 A
	Loads (F2)	25 A
	Battery (F3)	30 A
	Accessories (F4)	15 A

DRIVE SYSTEM - CHAINCASE		
Chaincase oil (if equipped)	Type	Synthetic chaincase oil
	Quantity	350 ml (12 U.S. oz)
Chain drive ratio		21/53
Chain	Pitch	9.530 mm (.375 in)
	Type	Silent
	Links qty	116

DRIVE PULLEY			
Drive pulley	Type		pDrive
Drive pulley calibration	Clutch engagement (RPM)		3800 ± 100 RPM
Drive pulley calibration	Spring color code		Blue/Violet
	Spring length		100.3 mm (3.949 in)
Drive pulley calibration	Screw length		14 mm (.551 in)
	Ramp		984
Drive pulley calibration	Clicker position		1
Driven pulley type	Type		QRS Vent Plus
	Spring color code		Black
	Spring length		88.8 mm (3.496 in)
	Spring preload		0
	Cam angle		40° - XTI
Pulley distance	Z		Not adjustable 20.9 mm (.823 in)
	X		Not adjustable 41.1 mm ± 1.8 mm (1.618 in ± .071 in)
Offset	Y - X	New	Not adjustable 3 mm (.118 in)
		After break-in	Not adjustable 2 mm ± .5 mm (.079 in ± .02 in)
Drive belt	Width		38.3 mm (1.508 in)
	Wear limit		35.9 mm (1.413 in)
Drive sprocket number of teeth			6

DRIVE SYSTEM - TRACK		
Track	Width	406.4 mm (16 in)
	Length	419 cm (165 in)
Track	Profile height	76.2 mm (3 in)
Track adjustment	Deflection	3.2 cm (1.26 in)
	Force	6.0 kgf to 8.5 kgf (13 lbf to 19 lbf)

BRAKE SYSTEM		
Brake	Type	Single 200 mm cross drilled carbon steel disc
Brake fluid	Type	DOT 4
	Quantity	65 ml (2.2 U.S. oz)
Caliper		Fixed twin pistons (2 x 40mm)
Brake pad material		Organic

BRAKE SYSTEM	
Brake lining minimum thickness (including backing plate)	5 mm (.197 in)
Brake disc minimum thickness	4.5 mm (.177 in)
Brake disc maximum warpage	0.25 mm (.01 in)

FRONT SUSPENSION	
Suspension type	RAS 3
Suspension maximum travel	215 mm (8.5 in)
Shock absorber type	HPG Plus Kashima coated
Stabilizer bar type	Link

REAR SUSPENSION		
Suspension type		tMotion
Suspension maximum travel Measured at rear arm		239 mm (9.4 in)
Shock absorber type	Center	HPG Plus
	Rear	KYB PRO 36 EA
Stroke limiter standard position		3

STEERING SYSTEM	
Handlebar	Aluminum with J-Hooks and Grab handle
Riser block height	165 mm (6.5 in)
Ski type	Pilot DS3
Ski alignment	5 mm (.197 in) (toe-out)

WEIGHT AND DIMENSIONS	
Mass (dry)	203 kg (448 lb)
Overall length	323 cm (127.2 in)
Overall width	108 cm to 111 cm (42.5 in to 43.7 in)
Overall Height	130.6 cm (51.4 in)
Ski stance	91 cm to 95.5 cm (35.8 in to 37.6 in)

MATERIAL	
Frame	Aluminum
Side bottom pan, front bottom pan, gauge support, gauge support cover, side panels, rear console, windshield support, glove box cover and headlamp surrounding, hood and top side panels	Polypropylene

WIRING DIAGRAM INFORMATION

GENERAL

WIRING DIAGRAM LOCATION

Wiring diagrams are found in the *WIRING DIAGRAM BOOKLET*.

WIRING DIAGRAM WITH COLORED LINES

The wiring diagram on the *KNOWLEDGE CENTER* is in color.

Color Definition

NOTE: To find the color of the wire on the vehicle skip to *WIRE COLORS AND SIZES* in this subsection.

The following colors refer to the color of the line drawn in the wiring diagram.

LINE COLOR	LINE TYPE	FUNCTION	DEFINITION
Red	Thick	Unswitched 12 V	Hot at all times
	Thin	3.3 and 5 V	Sensor reference voltage
Orange	Thick	55 - 60 V	High voltage
Blue	Thin	Analog signal	Variable voltage
Cyan	Thin	Digital signal	Pulsed or constant digital (on/off)
Pink	Thick	12V switched	Condition must be met to activate circuit
Green	Thin dotted	Communication	Data communication between modules using a protocol (CAN, LIN, & other)
Brown	Thick	Power control	Controls a circuit by providing an on/off control to activate the circuit
Yellow	Thick	AC Volts	Alternative current exiting the magneto
Black	Thick	Permanent ground	A ground that is in permanent contact
	Thin	Module (analog/digital) ground	A ground that is controlled by a module

WIRING DIAGRAM CODES

The wiring diagrams use the following codes.

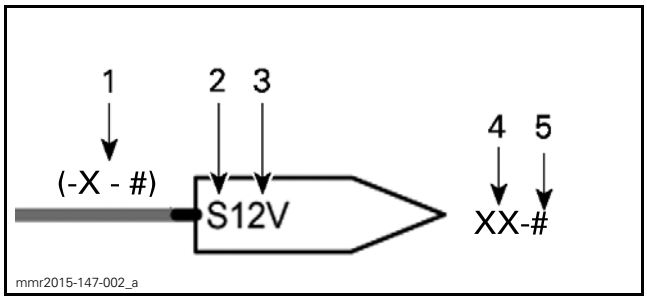

1. *Wiring diagram index*
2. *Power condition*
3. *Voltage of a powered circuit*
4. *Connector code*
5. *Connector pin*

Wiring Diagram Index

The wiring diagram is separated by rows (letters) and columns (numbers).

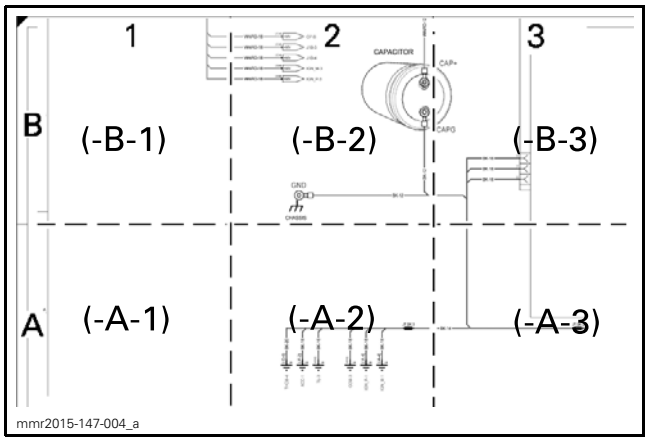

WIRING DIAGRAM INDEX

Power Condition (12V Circuits Only)

The wiring diagram indicates when a circuit is powered:

– S: Switched. Certain conditions must be met;
– U: Unswitched (hot at all times).

Voltage of Powered Circuit

Voltage references are approximate for a powered circuit in good condition.

INDICATED VOLTAGE	APPROXIMATION
12V	Battery voltage
5V	Regulated 4.95 - 5V
60V	Regulated 55 - 60V

Connector Code

The wire connects to the indicated connector. See image at the beginning of this subsection.

Connector Pin

The wire is the indicated pin in the connector.

NOTE: Could be identified by either a number or by a letter depending on the type of connector used.

FOLLOWING A CIRCUIT

To follow a circuit, search the in section of the wiring diagram shown in the wiring diagram index.

In this example, the 60V comes **from** JT WH/RD in section (-B-2).

NOTE: The arrow indicates the direction of the power in the circuit.

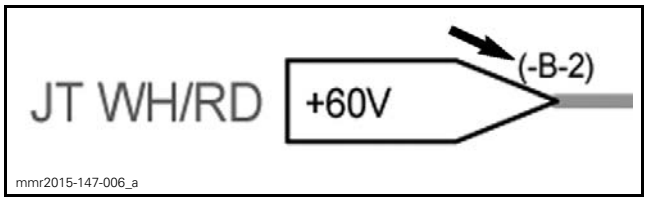

FROM JT WH/RD (-B-2)

In following example, the 60V goes **to** the IGN_M connector pin 3 in section (-B-4).

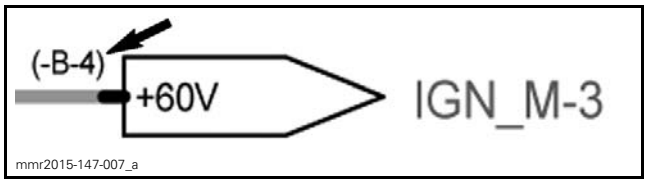

TO ING_M-3 (-B-4)

WIRE COLORS AND SIZES

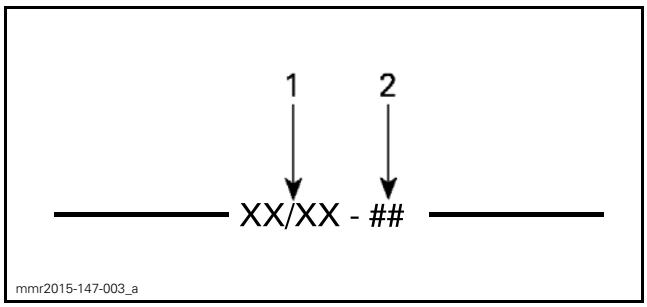

1. *Wire color*
2. *Wire gauge (AWG)*

The first color of a wire is the main color, second color is the stripe.

Example: YE/BK is a YELLOW wire with a BLACK stripe.

COLOR CODE					
BG	—	BEIGE	OG	—	ORANGE
BK	—	BLACK	RD	—	RED
BU	—	BLUE	VT	—	VIOLET
BN	—	BROWN	WH	—	WHITE
GN	—	GREEN	YE	—	YELLOW
GY	—	GRAY	PK	—	PINK
LT prefix means a "light" color. E.g: LT GN = Light green.					

SPLICES IN WIRING HARNESS

Splices in wiring harness are indicated on the wiring diagram as follows.

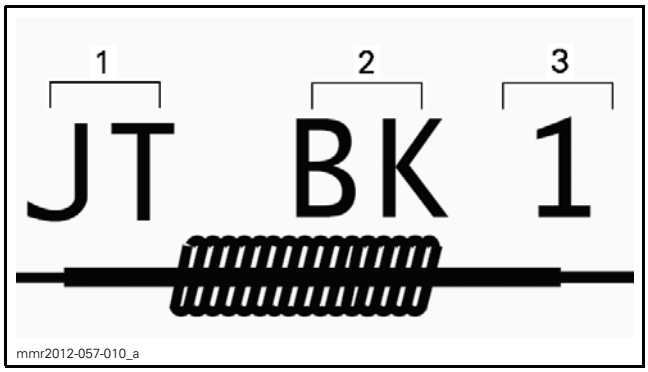

1. JT: Splice indication
2. Spliced wire color
3. Splice number on the wire

Refer to *SPLICE INFORMATION* subsection for more details.